Panasonic
ideas for life

NEW 2011

2011

NEW PRODUCTS 2011 // HEATING AND COOLING SYSTEMS

AQUAREA AIR TO WATER HEAT PUMP

DOMESTIC AIR TO AIR HEAT PUMP

VRF FS MULTI

COMMERCIAL AIR TO AIR

VRF INDUSTRIAL

heatingandcoolingsystems

Panasonic
ideas for life

heatingandcoolingsystems

eco ideas

'ECO IDEAS' FOR LIFESTYLES: WE WILL PROMOTE LIFESTYLES WITH VIRTUALLY ZERO CO_2 EMISSIONS THROUGHOUT THE WORLD. SPECIFICALLY:

- 30% of total sales will be achieved through "eco labeled" products. This includes both external labels such as EU eco flower, Blue Angel or Nordic Swan, and our internal 'eco ideas' label, which is given to products which achieve industry-leading environmental performance. [1]
- 3,500,000t of contribution in reducing CO_2 emissions with energy solution products (such as Solar Panels, Fuel Cells, Heat Pumps, Energy Recovering Ventilation, LED and Energy Saving Lamps). [2]
- Educate 100,000 children on eco related topics through the 'kids school – eco learning' programme.

'ECO IDEAS' FOR BUSINESS-STYLES: WE WILL CREATE AND PURSUE BUSINESS-STYLES THAT MAKE THE BEST USE OF RESOURCES AND ENERGY:

- 99% of waste materials generated in European production will be recycled [3], meaning less than 1% will be allowed to go to landfill.
- 1,000t of reduction in CO_2 emissions from Panasonic's offices across Europe. [4]
- 7,000t of contribution in reducing CO_2 emissions from production activities. [5]

1) Products awarded the 'eco ideas' label include those whose environmental performance is greater than the industry's No.2 model by 10% or more at the time of release, and those which achieve the highest rank in the market by external environmental labels in accordance to environmental performance.
2) An amount of CO_2 reduction compared to the estimated figure assuming no improvement. Measures were taken after March 31, 2006.
3) Includes all Panasonic Group's European factories with the exception of IPS-Alpha and Sanyo
4) Based on offices with 100 employees or more; based on FY 2009.
5) An amount of CO_2 reduction compared to the estimated figure assuming no improvement. Measures were taken after March 31, 2006.

PANASONIC HEATING AND COOLING SYSTEMS

With more than 30 years of experience, exporting to more than 120 countries around the world, Panasonic is unquestionably one of the leaders in the air conditioning sector. The company is also a world leader in innovation as it has filed more than 95,025 patents to improve its customers' lives. Moreover, Panasonic is determined to remain at the forefront of its market – thanks to more than 500 researchers working in European laboratories to design increasingly innovative products. In all, the company has produced more than 100 million compressors and its products are manufactured in 294 plants which are located all over the world. You can be assured of the extremely high quality of Panasonic's air conditioners.

This wish to excel has made Panasonic the international leader in heating and air conditioning solutions. The company's industrial capacity and firm commitment to the environment has enabled it to open new avenues of research and to develop innovative technologies which enhance its customers' way of life.

Panasonic offers a range of turnkey heating and air conditioning solutions for homes, medium-sized buildings such as offices and restaurants, and large-scale buildings. These offer maximum effectiveness, comply with the strictest environmental standards and meet the most avant-garde construction requirements of our time.

At Panasonic we know what a great responsibility it is to install heating and cooling systems. Because offering you the best solutions in heating and cooling matters.

EVERYTHING MATTERS

EUROVENT CERTIFIED PERFORMANCE
www.eurovent-certification.com

www.tuv.com TÜVRheinland ID:0091005766

QUALITY SYSTEM SIRIM

ISO 9000 Series Certification

CERTIFIED TO MS ISO 9002:1994
Panasonic HA Air-Conditioning (M) Sdn. Bhd. (PHAAM)
(Fomerly know as Matsushita Industrial Corp. Sdn. Bhd.)
Registration No.: AR 0866

ENVIRONMENTAL SYSTEM SIRIM

UKAS ENVIRONMENTAL MANAGEMENT 074

Enviroment Management Systems Approval Certificate

CERTIFIED TO MS ISO 14001:1997
Panasonic HA Air-Conditioning (M) Sdn. Bhd. (PHAAM)
(Fomerly know as Matsushita Industrial Corp. Sdn. Bhd.)
Certification No.: M015802127

SUMMARY

8 Aquarea's new Air-to-water Heat pump
9 Aquarea increase line-up!
10 "Green" high-efficient heating with Panasonic's new air-to-water heat pump systems
12 A compact design: Easy to install and maintain
14 Inverter+ compressor for even greater efficiency
16 What makes the air-to-water heat pump work
18 Application examples
20 Aquarea SDF // Bi-bloc // High connectivity // Heating only single-phase // Three-phase
22 Aquarea SDC // Bi-bloc // High connectivity // Heating and cooling single-phase // Three-phase
24 Aquarea SXF // Bi-bloc // T-cap // Heating only single-phase // Three-phase
26 Aquarea SXC // Bi-bloc // T-cap // Heating and cooling single-phase // Three-phase
28 Aquarea MDF // Mono-bloc // High connectivity // Heating only single-phase // Three-phase
30 Aquarea MDF // Mono-bloc // High connectivity // Heating only single-phase // Three-phase
32 Aquarea MDC // Mono-bloc // High connectivity // Heating and cooling single-phase // Three-phase
34 Aquarea MXF // Mono-bloc // T-cap // Heating only single-phase // Three-phase
36 Aquarea MXC // Mono-bloc // T-cap // Heating and cooling single-phase // Three-phase
38 Heating capacity table based on outlet temperature and outside temperature
42 Accessories
43 Error Codes

44 New domestic range
46 New econavi system
48 Advanced+plus. E-ion air purifying system with Patrol sensor
50 Outstanding energy-saving performance
52 Panasonic technology for comfort
54 The secret of saving energy. Different ranges that meet all types of requirements
56 Domestic air conditioner range
58 Feature explanations
59 Feature comparison
60 Wall mounted etherea // Inverter+ // silver
62 Wall mounted etherea // Inverter+ // silver
64 Wall mounted etherea // Inverter+ // white
66 Wall mounted etherea // Inverter+ // white
68 Wall mounted etherea // Inverter+
70 Wall mounted re type // standard inverter
72 Wall mounted type // Inverter+ // -15ºc
74 Wall-mounted type // Svtandard heat pump
76 Wall-mounted type // Standard cooling only
78 Floor console type // Inverter+
80 Single split floor or ceiling type // Inverter
82 Etherea multi split 2x1 // Inverter+
84 Etherea multi split 2x1 // Inverter+
86 Etherea multi split 3x1 // Inverter+
88 Etherea multi split 4x1 // Inverter+
90 Free Multi
92 Indoor units for free multi combinations
93 Outdoor units for free multi combinations
94 Free multi combinations
96 Self diagnosis description and check point table
97 Optional accessories

100 Commercial range
100 Fs technology
102 Control unit // Fs indoor units
104 Inverter + outdoor units // Yt Inverter outdoor units
106 Range of indoor units Fs and Range of outdoor units
108 4-Way 60x60 cassette fs // Inverter type
110 4-Way 90x90 cassette // Inverter + Fs type
112 4-Way 90x90 cassette // Inverter Fs type
114 4-Way 90x90 cassette // Heat pump Fs type
116 4-Way 90x90 cassette // Cooling only Fs type
118 Low static pressure hide away // Inverter + Fs type
120 Low static pressure hide away // Inverter Fs type
122 Low static pressure hide away // Heat pump Fs type
124 Low static pressure hide away // Cooling only Fs type
126 High static pressure hide away // Inverter + Fs type
128 High static pressure hide away // Inverter Fs type
130 High static pressure hide away // Heat pump Fs type
132 High static pressure hide away // Cooling only Fs type
134 Ceiling // Inverter + Fs type
136 Ceiling // Inverter Fs type
138 Ceiling // Heat pump Fs type
140 Ceiling // Cooling only fs type
142 High static pressure hide away 8-10 H.P. // 3 Phase inverter type
144 Twin flexi system fs // Inverter + // Inverter // heat pump // cooling only Fs
146 Connectivity
148 Self diagnosis description and check point table

150 New fs multi VRF
151 New easy to install VRF
153 Fs multi advantages
154 Outdoor units // U-4LA1E5 // U-5LA1E5 // U-6LA1E5
155 Outdoor units // U-8EA1E8 // U-10EA1E8
156 Energy saving inverter
158 Individual control systems
162 Combination table
163 Branch pipes
164 4, 5 and 6 HP, outdoor unit
166 8 and 10 HP, outdoor units
168 Range of indoor units
170 Range of outdoor units
170 Feature comparison
172 Wall-mounted type // Silver colour
174 Wall-mounted type // White colour // White colour -wide type-
176 Cassette (60x60) type
178 Cassette type (90x90)
180 Low-silhouette // Duct type // Low static pressure type
182 Low-silhouette // Duct type // Mid static pressure type

184 New Panasonic industrial ECOi VRF system
186 2 Tubes ECOi ME1 series
194 3 Tubes ECOi MF1 series
198 Mini ECOi high efficiency
200 Introducing Panasonic Gas Driven VRF
204 ECO G power
206 ECO G W-Multi
210 ECO G 3 Way Multi
212 ECO G Water Heat Exchanger
216 Installation instruction of GHP Water Heat Exchanger
218 Features
220 Indoor units
222 ECOi Indoor Units Range
224 U1 Type 4-Way cassette // Semi concealed cassette
226 Y1 Type 4-Way cassette 60x60 // Mini semi concealed cassette
228 L1 Type 2-Way cassette
230 D1 Type 1-Way cassette // Semi concealed slim cassette
232 F1 Type low silhouette ducted
234 M1 type slim low static ducted // Concealed duct
236 E1 Type high static pressure ducted // Concealed duct high-static pressure
238 T1 Type ceiling // Floor/Ceiling mounted
240 K1 Type // wall mounted
242 P1 type // floor standing
244 R1 type // concealed floor standing
246 System Controls for VRF
248 Individual Control Systems
250 Centralised Control Systems
254 Web Interface Systems
255 P-AIMS
256 Interfaces for External Control
258 VRF designer: New software for easy VRF calculation
261 Why renewal?
262 VRF renewal
263 Procedure for VRF Renewal
264 Branches and headers
269 Control equipment external dimensions
270 ECO G outdoor units external dimensions

280 Panasonic's energy recovery ventilator unit offers maximum comfort and greater energy savings
282 Energy recovery ventilation system
284 Air curtain

NEW 2011

AQUAREA AIR TO WATER HEAT PUMP

Panasonic has created Aquarea T-CAP type, a ground breaking low energy system for heating and domestic hot water production, which operates even at extreme outdoor temperatures. Aquarea guarantees you unbeatable performance and comfort. The outdoor unit can be backed up by solar panels and heats the water used both for domestic purposes and for radiators or radiant floors.

NEW 2011

ETHEREA WITH ECONAVI

More than ever before, Panasonic has developed the Etherea range with Econavi. With its innovative design, high efficiency and incomparable purification system, the range has been designed with your clients in mind. Above all, it is also a range for air conditioning professionals, such as yourself, thanks to its broad range of products which are capable of conditioning rooms of all sizes – always with optimal efficiency and incomparable ease of installation. The Etherea range guarantees that you are offering your clients the very best.

NEW 2011

COMMERCIAL AIR TO AIR

The semi-industrial range is constantly expanding so that you can always offer your clients the best solutions: high performance, silent machines and a complete range of ducts, cassettes and ceiling installations. Our machines are designed for you and are easy to install – enabling you to be increasingly competitive. Furthermore, we help you to improve the energy efficiency of your installations with Panasonic's new, extremely efficient enthalpy regenerator.

NEW 2011

MINI VRF FS MULTI, 4-10 HP

The brand new product in the Mini VRF range is the FS Multi system, which draws on Panasonic's experience in the heating and air-conditioning of large buildings. This is the only VRF range that incorporates Etherea indoor design units, available in white mother-of-pearl or silver grey. It is ideal for industrial or domestic installations.

NEW 2011

VRF INDUSTRIAL AND GHP

The news VRF Eco i series and GHP series are specifically designed for saving energy, easy installation and high efficiency performance, with a wide choice of outdoor and indoor unit models and unique features which are designed for the most demanding offices and big buildings. The hi-COP combined option range is available from 10 to 16 HP (10, 12, 14 & 16HP).

NEW 2011

ENERGY RECOVERY VENTILATION

Energy recovery ventilators offer ventilation which increases comfort and saves energy. They efficiently recover the heat lost in ventilation during the heat recovery process. Energy consumption is dramatically reduced by using a counter-flow heat exchange element. Air conditioning load is reduced by approximately 20%, resulting in significant energy savings.

Panasonic
ideas for life

eco ideas

PANASONIC ECOLOGY & ENERGY VISION

A STEP AHEAD IN ECOLOGY — IN HOMES, BUILDINGS AND TOWNS

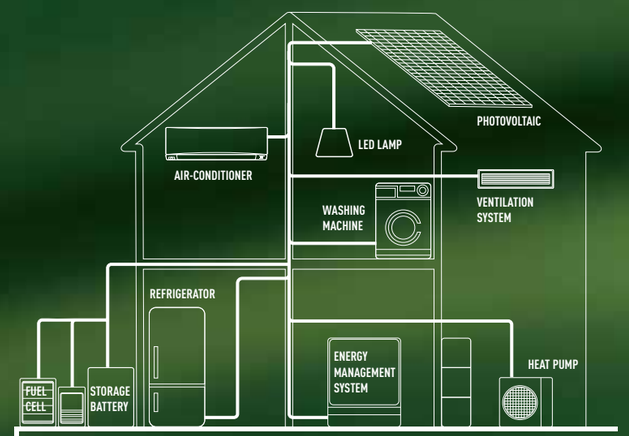

ENERGY MANAGEMENT

SAVE ENERGY

CREATE ENERGY

STORE ENERGY

Panasonic presents a more comfortable and ecological lifestyle. By linking a wide range of products for saving, creating and storing energy with Energy Management Systems, it is possible to control energy use in a smart way.
Panasonic aims to contribute towards reducing CO_2 emissions in the entire house and building.
Our steadfast commitment to the environment means that all of our air conditioners meet the most demanding requirements for energy consumption and noise emissions. But it also means that we search for new ideas to improve our environment, both in meticulous control of the processes of manufacturing and distributing our products and in new ways of living our day-to-day lives without endangering the planet's future.

AQUAREA
engineered for high performance

AQUAREA'S NEW AIR-TO-WATER HEAT PUMP THE BIGGEST LINE-UP ON THE MARKET TO MEET WITH YOUR DEMAND!

COST-EFFECTIVE AND ENVIRONMENTALLY FRIENDLY, PANASONIC'S NEW AQUAREA AIR-TO-WATER SYSTEM PROVIDES MAXIMUM EFFICIENCY AND CAPACITY EVEN AT -20 °C
Panasonic's new Aquarea system, based on high-efficiency heat pump technology, not only heats your home and hot water, but also cools your home in summer with incredible performances. This creates perfect comfort whatever the weather conditions, even at outdoor temperatures as low as -20°C.

output water 65°C — HIGH TEMP HEAT PUMP
high capacity at -15°C — AQUAREA T-CAP
4.74 COP high efficiency — AQUAREA HIGH CONNECTIVITY

energysaving

high efficiency heating — INVERTER+
INVERTER+ SYSTEM
The A Inverter+ system provides energy savings of up to 30% compared to non inverter models. You win and nature wins.

environmentally friendly refrigerant — R410A
REFRIGERANT R410A
R410A offers optimal performance and involves no environmental cost since it does not harm the ozone layer.

down to -20°C in heating mode — OUTDOOR TEMPERATURE
UP TO -20°C IN HEATING MODE
The air conditioner works in heat pump mode with an outdoor temperature as low as -20°C.

highconnectivity

boiler connection — RETROFIT
RENOVATION
Our Aquarea heat pumps can be connect to an existing or new boiler for optimum comfort even at very low outside temperatures.

solar panels connection — SOLAR KIT
SOLAR KIT
For even greater efficiency, our Aquarea heat pumps can be connected to solar panels with an optional kit.

domestic hot water — DHW
DHW
With Aquarea you can also heat your domestic hot water at a very low cost with the optional hot water cyclinder.

*We note that ADEME (French environmental and energy management agency) encourages consumers to choose heating and cooling systems that use heat pump systems.

AQUAREA INCREASE LINE-UP!

- **New** line-up of high temperature Heat Pumps (output water temperature of 65°C)
- **New** line-up of Total capacity Heat Pumps even at -15ºC

At the forefront of energy innovation, Aquarea is resolutely positioned as a "green" heating and air-conditioning system.
Aquarea is part of a new generation of heating and air-conditioning systems that use a renewable, free energy source – the air – to heat or cool the home and to produce hot water. The Aquarea heat pump is a much more flexible and cost-effective alternative to a traditional fossil fuel boiler.

An ideal heating solution for new and old buildings:
- A wide range from 7 to 16 kW, single and three phase, mono-bloc and bi-bloc
- 3 Versions:
  - the Standard Heat Pump
  - the High temperature Heat Pump (output water temperature of 65°C)
  - the Total capacity Heat Pump even at -15ºC
- The High-efficiency Heat Pump which operates at outside temperatures as low as –20ºC
- Reduces energy costs with its COP of 4.74*
- Reduces energy consumption and CO_2 emissions
- Provides cooling in summer
- Highly flexible:
  - Connects to an existing heating system
  - Connects to solar panels

* COP: energy efficiency in heating mode. COP of 4.74 for the 9kW WH-MDF09C9E8 or WH-UD09CE8 models at an outside temperature of 7 ºC, and for water. input and output temperatures of 30 °C and 35 °C (according to EN 14511-2)

"GREEN" HIGH-EFFICIENT HEATING WITH PANASONIC'S NEW AIR-TO-WATER HEAT PUMP SYSTEMS

UP TO 78% energy savings[1]

At the forefront of energy innovation, Aquarea is resolutely positioned as a "green" heating and air-conditioning system. Aquarea is part of a new generation of heating and air-conditioning systems that use a renewable, free energy source; air, to heat or cool the home and to produce hot water. The Aquarea heat pump is a much more flexible and cost-effective alternative to a traditional fossil fuel boiler.

We are surrounded by free, inexhaustible energy: supplied by the sun present in all spheres of our environment, in the air, the ground, the groundwater...

Heat pumps enable us to recover this free, inexhaustible energy and to use it to heat our homes. These systems have the huge advantage, apart from reducing your electricity bill, of saving fossil fuels while at the same time limiting greenhouse gas emissions*.

Thus, Panasonic's Aquarea system is an air/water heat pump system that uses calories from the outdoor air and transmits them via a heat exchanger to the water used to heat your home in winter, in addition, some Aquarea models can even be used to cool your house in summer timer and produce your hot water all year round.

* We note that ADEME (French environmental and energy management agency) encourages consumers to choose heating and cooling systems that use heat pump systems.

UP TO 78% ENERGY SAVINGS[1]

Panasonic's Aquarea heat pump provides savings of up to 78% on heating expenses compared with electrical heaters. For example, the Aquarea system of 9 kW has a COP of 4,74 which means that for every kW of electricity consumed, it returns 4,40 kW of energy, i.e. 3,40 kW more than a conventional electrical heating system which has a maximum COP of 1. This is equivalent to a 78% saving.
Consumption can be further reduced by connecting solar panels to the Aquarea system.

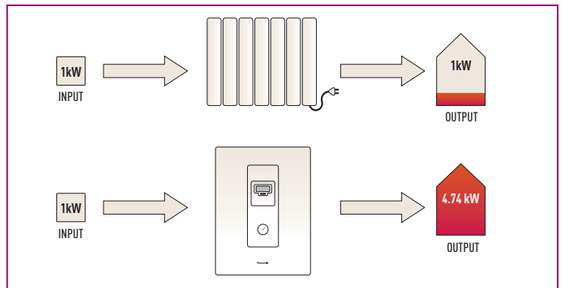

* The comparison is made on nominal manufacturer values based on the following conditions:

Rating conditions	Heating
Inside air temperature	20°C DB
Outside air temperature	7°C DB / 6°C WB

DB: Dry Buld; WB: Wet Buld

Conditions : Water input temperature: 30 °C. Water output temperature: 35 °

1) Up to 78% of the heat produced by a heat pump is free, since it comes from the outdoor air.

NEW 2011

PANASONIC HAS DESIGNED A COMPLETELY NEW LINE-UP TO GIVE THE BEST TO OUR CUSTOMERS

Which product for which application?

AQUAREA **HIGH CONNECTIVITY**

4.74** COP high efficiency
AQUAREA HIGH CONNECTIVITY

For a house with low temperature radiators or floor heating, our high connectivity Aquarea heat pump is a good solution. This solution can work as a stand-alone unit or can be combined with a gas or oil boiler depending on requirements. This solution has the best ratio for heating capacity and efficiency.

AQUAREA **HT***

For a house with high temperature radiators (for example, cast iron radiators), the Aquarea High Temperature Solution is probably the most adequate as Aquarea HT provides output water temperatures of 65°C even at -15°C. Aquarea HT is able to deliver 65°C with the Heat Pump alone.

output water 65°C
HIGH TEMP HEAT PUMP

AQUAREA **T-CAP***

If the most important aspect is to keep nominal capacities even at temperatures of -7°c or -15°c. This ensures that there is always enough capacity to heat the house without help from an external boiler – even at extremely low temperatures.

high capacity at -15°C
AQUAREA T-CAP

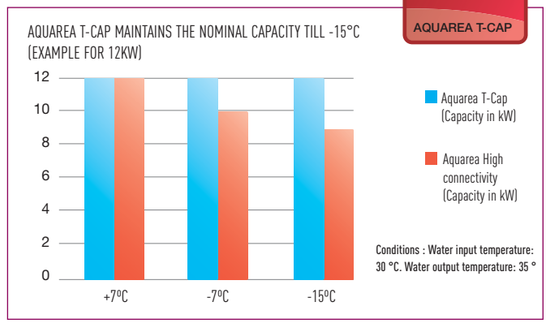

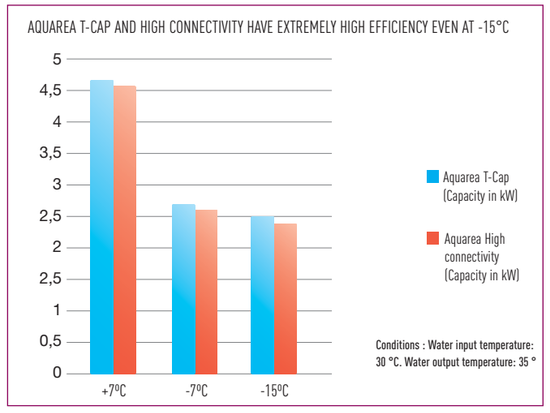

Aquarea T-cap always has high efficiency and high heating capacity even at extremely low temperatures. With Aquarea T-Cap, you can always enjoy high savings.

* Availability: Aquarea T-CAP Single phase. June 2011; Aquarea T-CAP Three phase: September 2011; Aquarea HT: December 2011.
** Tentative spec, Conditions : Water input temperature: 30 °C. Water output temperature: 35 °; outside temperature: +7°C

A COMPACT DESIGN: EASY TO INSTALL AND MAINTAIN

Aquarea is a very easy heating and air conditioning system to install either in new or old buildings.

Panasonic's Aquarea air to water system provides a considerable reduction on installation and maintenance costs. For new buildings, no drilling or excavation work is necessary to capture the heat, unlike geothermal installations, nor any gas connection, chimneys or fuel reservoirs. For retrofits or refurbishing, it is easy to connect to an existing heating system with low-temperature radiators or a radiant floor.

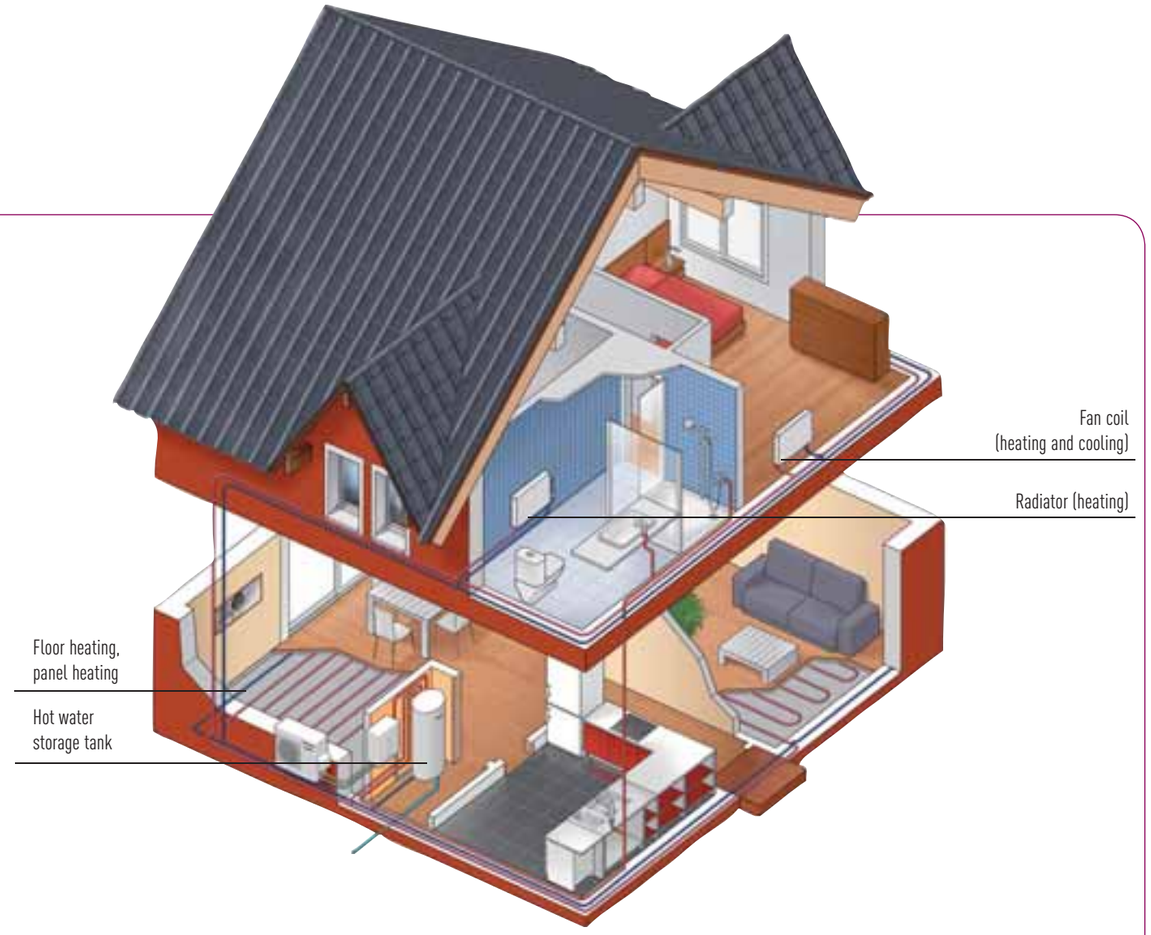

HOW DOES THE AQUAREA SYSTEM WORK ?

An air to water heat pump system uses heat energy present in the outdoor air to heat the house, cool it and also to produce hot water. The Aquarea system therefore uses free energy to heat or cool your home. It only consumes electricity to operate the compressor, the electronics, the pumps and in the event of very low temperatures, the electric elements. The result is very high efficiency and real energy savings.

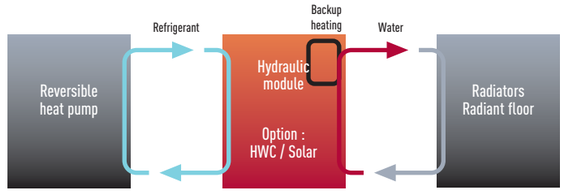

Example : with split-system

THERE ARE SEVERAL TYPES OF HEAT PUMP:

- The bi-bloc system
  This is formed by an outdoor unit and a hydraulic module, normally located in the utility room or garage. This configuration requires refrigerant pipes between the two units but is easily integrated in the house and can be connected to an existing boiler, for example.
- The mono-bloc system
  It only has an outdoor unit. The installation doesn't require a refrigerated connection and is only connected to the heating system. This system is therefore easier to install, but requires more outdoor space.

COP 4,74

COMFORT, SAVINGS AND POWER EVEN AT VERY LOW TEMPERATURES

Panasonic's inverter+ system

After quickly reaching the selected temperature, the Inverter+ system will gradually adjust the power in order to maintain a constant temperature. Thus, there will not be any sudden changes in temperature and the capacity of the power also guarantees a constant and pleasant temperature, even when the outside temperature changes.

Maximum efficiency even at extremely low temperatures

The Aquarea range has been specially designed to provide maximum efficiency even at extreme temperatures when compared with electrical heaters or gas boilers.

SDF/SDC/MDF/MDC	7 kW	9 kW	12kW	14 kW	16 kW
Heating Capacity at +7°C (kW)	7	9	12	14	16
COP at +7°C with heating water temperature at 35°C	4,4	4,74	4,67	4,5	4,23
Heating Capacity at +2°C	6,55	9	11,4	12,4	13
COP at +2°C with heating water temperature at 35°C	3,31	3,53	3,4	3,32	3,25
Heating Capacity at -7°C (kW)	5,15	9	10	10,7	11,4
COP at -7°C with heating water temperature at 35°C	2,65	2,81	2,7	2,62	2,55
Heating Capacity at -15°C (kW)	4,6	8,3	8,9	9,5	10,3
COP at -15°C with heating water temperature at 35°C	2,3	2,55	2,43	2,35	2,33

SXF/SXC/MXF/MXC	9 kW	12 kW
Heating Capacity at +7°C (kW)	9	12
COP at +7°C with heating water temperature at 35°C	4,74	4,67
Heating Capacity at +2°C	9	12
COP at +7°C with heating water temperature at 35°C	3,53	3,4
Heating Capacity at -7°C (kW)	9	12
COP at -7°C with heating water temperature at 35°C	2,81	2,7
Heating Capacity at -15°C (kW)	9	12
COP at -15°C with heating water temperature at 35°C	2,54	2,4

Conditions : Water input temperature: 30 °C. Water output temperature: 35 °.
* Tentative specifications

HEAT PUMPS: MORE EFFICIENT THAN OTHER HEATING SYSTEMS

Panasonic heat pumps have a maximum COP of 4.74 at + 7°C which makes them much more efficient than fuel-fired boilers, gas boilers and electrical heaters.

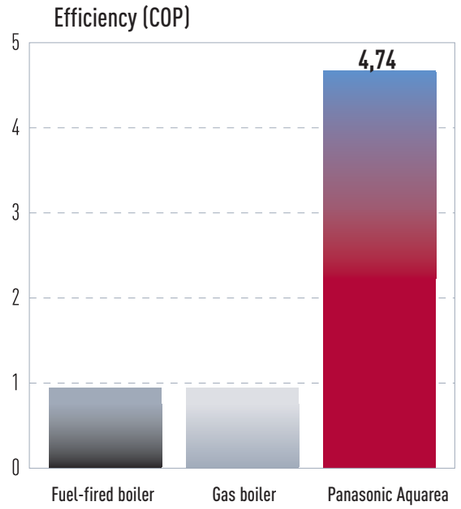

high efficiency heating
INVERTER+

INVERTER+ COMPRESSOR FOR EVEN GREATER EFFICIENCY

With over 100 million compressors supplied, Panasonic has demonstrated its status as leader and the excellent quality and reliability of its heat pumps.
With a Panasonic Inverter+ compressor, you can save up to 30% energy compared to a traditional system no inverter.

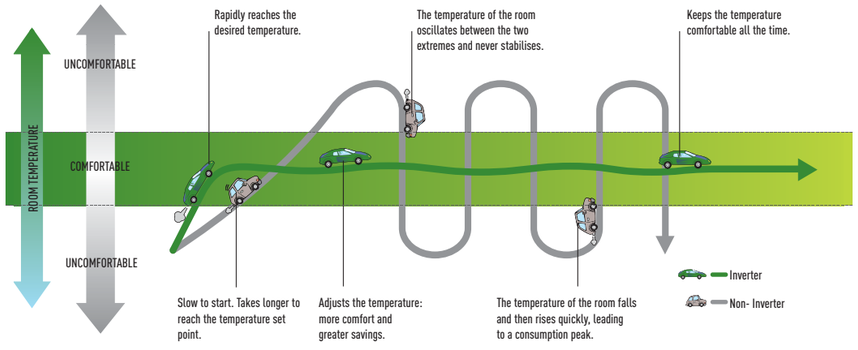

HOW TO CALCULATE THE POWER YOUR HOUSE NEEDS

To calculate the power, you will need a thermal balance report drawn up by a specialist who will analyse the house's insulation, its orientation, the openings, the minimum temperature in your area, etc.
However, here is a quick calculation method to enable you to roughly estimate the power needed. This calculation method is given for guidance only. Panasonic will not accept responsibility under any circumstances in the event of an assessment error.

1- Calculation of the house's total energy loss:

A detached house's total energy loss can be calculated approximately using the following formula: $D = G \times V \times \Delta T$
Where:
D = Total loss in W
V = Living space in m^3
ΔT = Difference between the temperature inside the house and the minimum outdoor temperature where the house is located
G = The building's insulation coefficient in W/m^3K .°C

Estimation of coefficient G according to the insulation type (G en W/m^3K . °C)

Old house without insulation	G = 2
Old house with insulation	G = 1.5
House built after 1990	G = 1.1
House built after 2005	G = 0.8
Very good insulation	G = 0.6
Bioclimatic	G = 0.4

2- Power requirement (for floor panel Heater):

The model selected must be capable of providing power at least equal to the estimated total energy loss value.
Example: A 130 m^2 detached house with a ceiling height of 2.5 m, with a minimum outdoor temperature of -7 °C, built in 1995, has total energy loss:
$D = 1.1 \times [(130\ m^2 \times 2{,}5\ m) \times (20\ °C - (-7\ °C)] = 9652\ W$ (i.e. 9.65 kW)
We must therefore select a Heat Pump capable of producing 9.65 kW at –7°C, which leads us to a 12- kW Aquarea model.

WHAT MAKES THE AIR-TO-WATER HEAT PUMP WORK

- The outdoor unit: this captures the free energy from the outdoor air and brings it into the house by means of the hydraulic module. These free calories are transported to the hydraulic module using an environmentally-friendly refrigerant gas with a high thermal exchange coefficient (R410A).
- Via the hydraulic module, with control panel, the temperature inside the house can be controlled and efficiency maximised. It has a heat exchanger which transmits the calories contained in the refrigerant coming from the outdoor unit to the water used for the house's heating and hot water. The hydraulic module manages priorities in terms of heating and hot water production.
  This hydraulic module is situated in the house in the case of the bi-bloc system or in the outdoor unit in the case of the mono-bloc system.
- The hot water cylinder heats the hot water. It is made of stainless steel, which guarantees it a very long life. It is also fitted with a 3 kW element to ensure maximum comfort when outdoor temperatures are very low. The heater, situated at the top of the cylinder, guarantees maximum efficiency and faster heat-up.
  A 3-way valve for the hot water cylinder connection is supplied with the hot water cylinder.
- Other necessary or optional features (not provided by Panasonic):
  - Room temperature thermostat, which can be connected to the Aquarea system to ensure optimum room temperature conditions.
  - Solar kit, to connect solar panels for even greater efficiency.
- 3 kw of electric heater are included into the sanitary tank to ensure:
  - maximum comfort
  - maximum efficiency
  and more for sterilization cycle

TWO OR THREE EARTH LEAKAGE CUT-OUTS

The Aquarea hydraulic module has differential cut-outs ensuring maximum safety in the event of a short circuit:
- 2 differential cut-outs: 7 and 9 KW
- 3 differential cut-outs: 12 , 14 and 16 KW

THE CONTROL PANEL

The control panel allows perfect temperature control based on the outdoor temperature, providing maximum efficiency and comfort.
The control panel controls the heating temperature and the hot water cylinder temperature very simply.

THE HYDRAULIC MODULE

3KW / 6KW / 9KW electric element

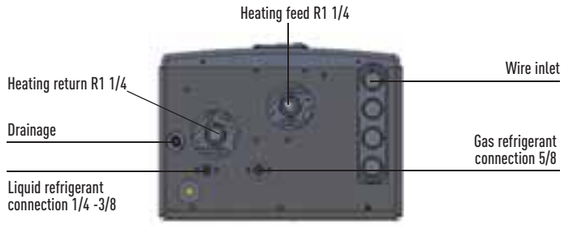

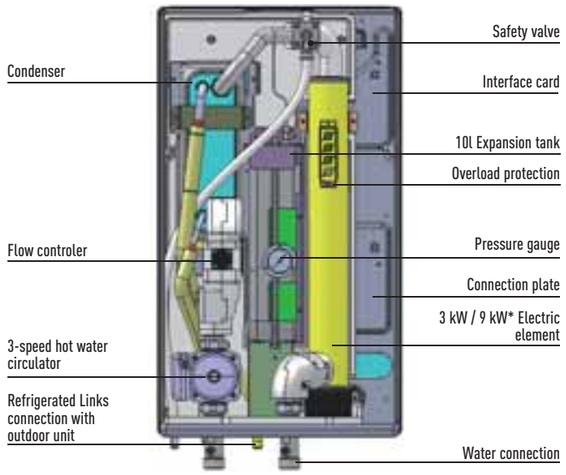

* 3 kW for 7 and 9 kW, 6 kW for 12, 14, 16 kW single-phase
9 kW for 12, 14, 16 kW three-phase

EASY PROGRAMMING OF THE CONTROL PANEL

The primary circuit temperature is controlled based on the outdoor temperature.
The temperature of the primary circuit is determined by your heating specialist depending on your installation. Enter the below parameters in the remote control on starting up the system.
Your heating specialist must also select the type of operation you need: heating priority or hot water cylinder priority.

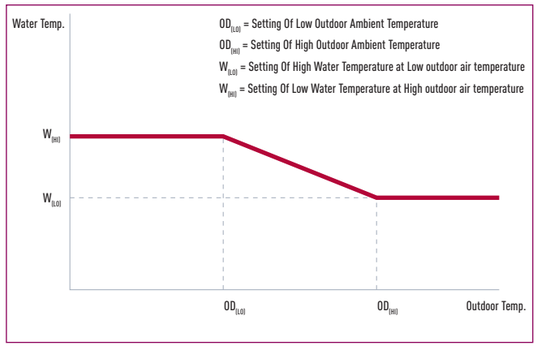

EASY READING OF CONTROL OF WATER PRESSURE

Pressure gauge
The water pressure must be between 0.055 and 0.19 MPa

APPLICATION EXAMPLES

AQUAREA IN A RADIANT FLOOR AND HOT WATER CYLINDER ON NEW HOUSES APPLICATION HEAT PUMP, SDF / SDC / SXF / SXC

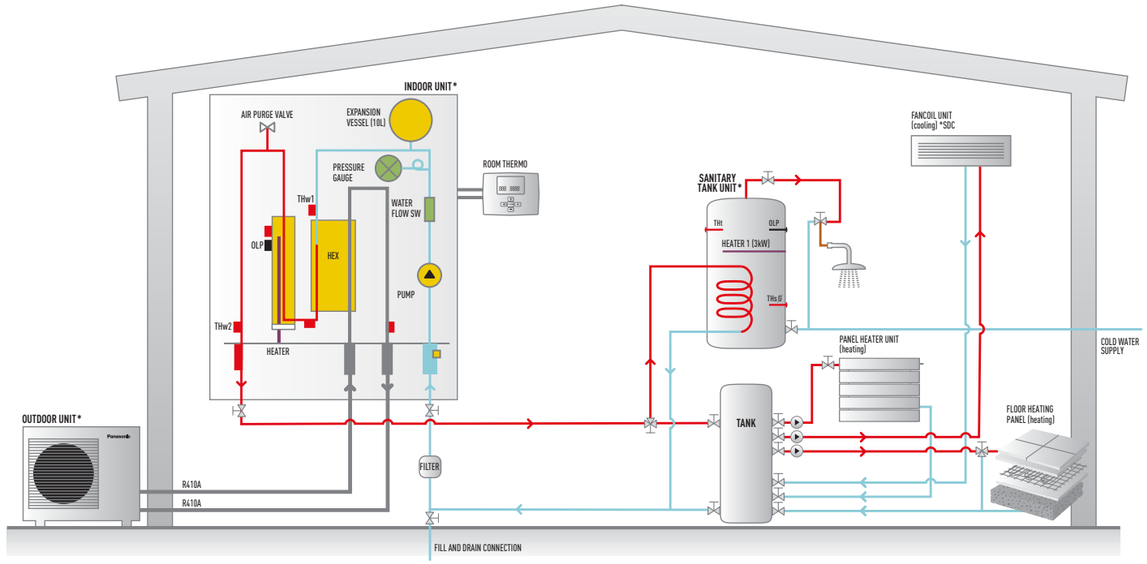

Schematic diagram

* Panasonic supplies the outdoor unit, the indoor unit, the sanitary tank and a 3-way on/off valve (included with the sanitary tank)

- Hot water production with TD series cylinder
- Heating
- Cooling (only for the SDC / SXC series)
- Connection of thermostat possible

AQUAREA AS BOILER BACKUP AND SOLAR PANELS HEAT PUMP CONNECTED TO EXISTING BOILER, SDF / SDC / SXF / SXC

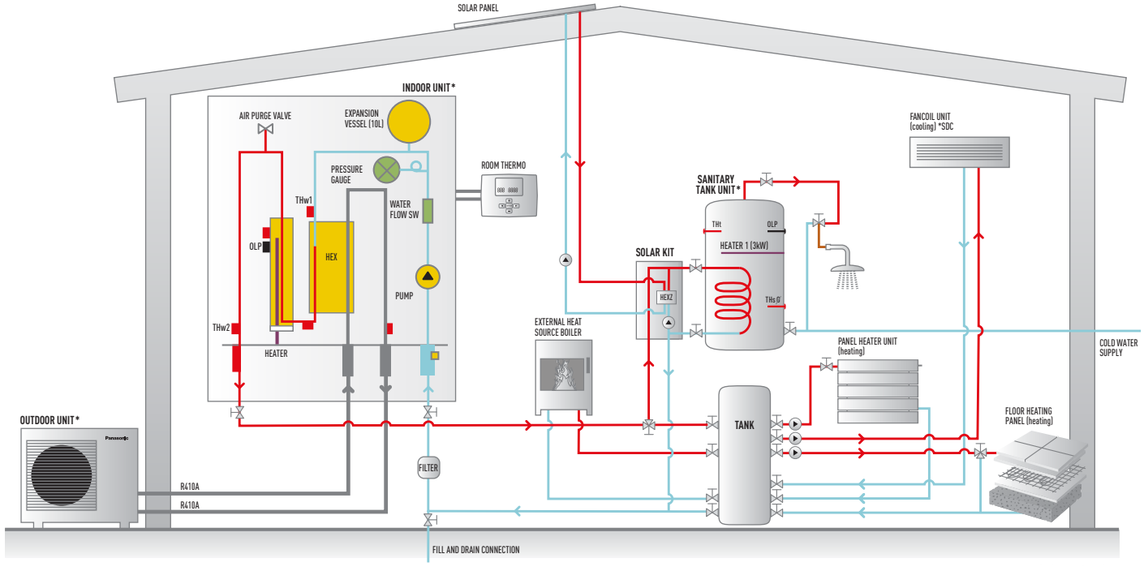

Schematic diagram

* Panasonic supplies the outdoor unit, the indoor unit, the sanitary tank and a 3-way on/off valve (included with the sanitary tank)

- Hot water production with TD series cylinder
- Heating with boiler backup
- Cooling (SDC / SXC series only)
- Connection of solar panels possible
- Connection of a thermostat possible

LINE UP				7KW	9KW	12KW	14KW	16KW
Aquarea High connectivity	Bi-Bloc	Single phase	Heating only	WH-SDF07C3E5 / WH-UD07CE5-A (F1)	WH-SDF09C3E5 / WH-UD09CE5-A (F1)	WH-SDF12C6E5 / WH-UD12CE5-A (F2)	WH-SDF14C6E5 / WH-UD14CE5-A (F2)	WH-SDF16C6E5 / WH-UD16CE5-A (F2)
			Heating and cooling	WH-SDC07C3E5 / WH-UD07CE5-A (F1)	WH-SDC09C3E5 / WH-UD09CE5-A (F1)	WH-SDC12C6E5 / WH-UD12CE5-A (F2)	WH-SDC14C6E5 / WH-UD14CE5-A (F2)	WH-SDC16C6E5 / WH-UD16CE5-A (F2)
		Three phase	Heating only		WH-SDF09C3E8 / WH-UD09CE8 (F2)	WH-SDF12C9E8 / WH-UD12CE8 (F2)	WH-SDF14C9E8 / WH-UD14CE8 (F2)	WH-SDF16C9E8 / WH-UD16CE8 (F2)
			Heating and cooling		WH-SDC09C3E8 / WH-UD09CE8 (F2)	WH-SDC12C9E8 / WH-UD12CE8 (F2)	WH-SDC14C9E8 / WH-UD14CE8 (F2)	WH-SDC16C9E8 / WH-UD16CE8 (F2)
	Mono-Bloc	Single phase	Heating only		WH-MDF09C3E5 (F3)	WH-MDF12C6E5 (F3)	WH-MDF14C6E5 (F3)	WH-MDF16C6E5 (F3)
			Heating and cooling		WH-MDC09C3E5 (F3)	WH-MDC12C6E5 (F3)	WH-MDC14C6E5 (F3)	WH-MDC16C6E5 (F3)
		Three phase	Heating only		WH-MDF09C3E8 (F3)	WH-MDF12C9E8 (F3)	WH-MDF14C9E8 (F3)	WH-MDF16C9E8 (F3)
			Heating and cooling		WH-MDC09C3E8 (F3)	WH-MDC12C9E8 (F3)	WH-MDC14C9E8 (F3)	WH-MDC16C9E8 (F3)
Aquarea T-CAP High connectivity	Bi-Bloc	Single phase	Heating only		WH-SXF09D3E5 / WH-UX09DE5 (F1)	WH-SXF12D6E5 / WH-UX12DE5 (F2)		
			Heating and cooling		WH-SXC09D3E5 / WH-UX09DE5 (F1)	WH-SXC12D6E5 / WH-UX12DE5 (F2)		
		Three phase	Heating only		WH-SXF09D3E8 / WH-UX09DE8 (F2)	WH-SXF12D9E8 / WH-UX12DE8 (F2)		
			Heating and cooling		WH-SXC09D3E8 / WH-UX09DE8 (F2)	WH-SXC12D9E8 / WH-UX12DE8 (F2)		
	Mono-Bloc	Single phase	Heating only		WH-MXF09D3E5 (F3)	WH-MXF12D6E5 (F3)		
			Heating and cooling		WH-MXC09D3E5 (F3)	WH-MXC12D6E5 (F3)		
		Three phase	Heating only		WH-MXF09D3E8 (F3)	WH-MXF12D9E8 (F3)		
			Heating and cooling		WH-MXC09D3E8 (F3)	WH-MXC12D9E8 (F3)		
Aquarea High temperature, High connectivity	Bi-Bloc	Single phase	Heating only		WH-SHF09D3E5 / WH-UH09DE5 (F1)	WH-SHF12D6E5 / WH-UH12DE5 (F2)		
			Heating and cooling		WH-SHC09D3E5 / WH-UH09DE5 (F1)	WH-SHC12D6E5 / WH-UH12DE5 (F2)		
		Three phase	Heating only		WH-SHF09D3E8 / WH-UH09DE8 (F2)	WH-SHF12D9E8 / WH-UH12DE8 (F2)		
			Heating and cooling		WH-SHC09D3E8 / WH-UH09DE8 (F2)	WH-SHC12D9E8 / WH-UH12DE8 (F2)		
	Mono-Bloc	Single phase	Heating only		WH-MHF09D3E5* (F3)	WH-MHF12D6E5* (F3)		
			Heating and cooling		WH-MHC09D3E5* (F3)	WH-MHC12D6E5* (F3)		
		Three phase	Heating only		WH-MHF09D3E8* (F3)	WH-MHF12D9E8* (F3)		
			Heating and cooling		WH-MHC09D3E8* (F3)	WH-MHC12D9E8* (F3)		

FIGURE 1

FIGURE 2

FIGURE 3

* Tentative references, may change without notice

high efficiency heating
INVERTER+

AQUAREA SDF // BI-BLOC // HIGH CONNECTIVITY // HEATING ONLY SINGLE-PHASE // THREE-PHASE

The Aquarea SDF range adapts equally well to an existing installation such as a boiler backup or to a new installation with floor heating, low-temperature radiators or even fan-coil heaters. These ranges can also be connected to a solar kit in order to increase efficiency and minimize the impact on the ecosystem. Finally, it is possible to connect a thermostat for even better heating control and management.

environmentally friendly refrigerant R410A
down to -20°C in heating mode OUTDOOR TEMPERATURE
boiler connection RETROFIT
solar panels connection SOLAR KIT
domestic hot water DHW

BI-BLOC // HIGH-CONNECTIVITY // HEATING ONLY // SDF

			SINGLE-PHASE					THREE-PHASE			
Indoor unit			**WH-SDF07C3E5**	**WH-SDF09C3E5**	**WH-SDF12C6E5**	**WH-SDF14C6E5**	**WH-SDF16C6E5**	**WH-SDF09C3E8**	**WH-SDF12C9E8**	**WH-SDF14C9E8**	**WH-SDF16C9E8**
Heating Capacity at +7°C		kW	7	9	12	14	16	9	12	14	16
COP at +7°C with heating water temperature at 35°C			4,4	4,09	4,67	4,5	4,23	4,74	4,67	4,5	4,23
Heating Capacity at -7°C		kW	5,15	5,9	10	10,7	11,4	9	10	10,7	11,4
COP at -7°C			2,65	2,5	2,7	2,62	2,55	2,81	2,7	2,62	2,55
Heating Capacity at -15°C		kW	4,6	5,9	8,9	9,5	10,3	8,3	8,9	9,5	10,3
COP at -15°C with heating water temperature at 35°C			2,3	2,2	2,43	2,35	2,33	2,55	2,43	2,35	2,33
Dimensions (H x W x D)		mm	892 x 502 x 353	892 x 502 x 353	892 x 502 x 353	892 x 502 x 353	892 x 502 x 353	892 x 502 x 353	892 x 502 x 353	892 x 502 x 353	892 x 502 x 353
Weight		kg	43	43	49	49	49	50	51	51	51
Water pipe connector			R1 1/4	R1 1/4	R1 1/4	R1 1/4	R1 1/4	R1 1/4	R1 1/4	R1 1/4	R1 1/4
Pump	No. of Speed		3	3	3	3	3	3	3	3	3
	Input power(max)	W	100	100	190	190	190	190	190	190	190
Heating water flow (_T=5 K. 35°C)		l/min	20,1	25,8	34,4	40,1	45,9	25,8	34,4	40,1	45,9
Capacity of integrated electric heater		kW	3	3	6	6	6	3	9	9	9
Input Power		kW	1,59	2,2	2,57	3,11	3,78	1,9	2,57	3,11	3,78
Running and starting Current		A	7,3	10,1	11,7	14,1	17,1	2,9	3,9	4,7	5,7
Maximum Current		A	21	22,9	24	25	26	7,5	8,8	9,4	9,9
Outdoor unit			**WH-UD07CE5-A**	**WH-UD09CE5-A**	**WH-UD12CE5-A**	**WH-UD14CE5-A**	**WH-UD16CE5-A**	**WH-UD09CE8**	**WH-UD12CE8**	**WH-UD14CE8**	**WH-UD16CE8**
Sound pressure level		dB(A)	48	49	50	51	53	49	50	51	53
Sound power level		dB	66	67	67	68	70	66	67	68	70
Dimensions (H x W x D)		mm	795 x 900 x 320	795 x 900 x 320	1340 x 900 x 320	1340 x 900 x 320	1340 x 900 x 320	1340 x 900 x 320	1340 x 900 x 320	1340 x 900 x 320	1340 x 900 x 320
Weight		KG	66	66	106	106	106	109	109	109	109
Pipe Diameter	Liquid	mm (Inch)	6,35 (1/4")	6,35 (1/4")	9,52 (3/8")	9,52 (3/8")	9,52 (3/8")	9,52 (3/8")	9,52 (3/8")	9,52 (3/8")	9,52 (3/8")
	Gas	mm (Inch)	15,88 (5/8")	15,88 (5/8")	15,88 (5/8")	15,88 (5/8")	15,88 (5/8")	15,88 (5/8")	15,88 (5/8")	15,88 (5/8")	15,88 (5/8")
Refrigerant (R410A)		kg	1,45	1,45	2,75	2,75	2,75	2,75	2,75	2,75	2,95
Pipe Length Range		m	3 – 30	3 – 30	3 – 40	3 – 40	3 – 40	3 – 40	3 – 40	3 – 40	3 – 40
Pipe Length for nominal capacity		m	7	7	7	7	7	7	7	7	7
Pipe Length for additional gas		m	10	10	30	30	30	30	30	30	30
Additional Gas Amount (R410A)		g/m	30	30	50	50	50	50	50	50	50
I/D&O/D Hight Difference		m	20	20	30	30	30	30	30	30	30
Operation Range	Outdoor Ambient	°C	–20 to 35	–20 to 35	–20 to 35	–20 to 35	–20 to 35	–20 to 35	–20 to 35	–20 to 35	–20 to 35
	Water Outlet (at-2/-7/-15) 2)	°C	25 – 55	25 – 55	25 – 55	25 – 55	25 – 55	25 – 55	25 – 55	25 – 55	25 – 55

OPTIONAL SANITARY TANK

SANITARY TANK			WH-TD20B3E5	WH-TD30B3E5
Water volume		L	198	287
Max. water temperature		°C	75	75
Dimension	Hight	mm	1.150	1.600
	Diameter		580	580
Weight		kg	46	60
Electric heater		kW	3	3
Power supply			Single Phase	Single Phase
Material inside tank			Inox	Inox

Performance calculation in agreement with Eurovent.
Sound pressure measured at 1 m from the outdoor unit and at 1.5-m height
Conditions : Water input temperature: 30 °C. Water output temperature: 35 °

TECHNICAL FOCUS

- RANGE FROM 7 TO 16 KW, SINGLE AND THREE-PHASE
- MAXIMUM HYDRAULIC MODULE OUTPUT TEMPERATURE: 55 °C
- WORKS DOWN TO –20 °C
- MAXIMUM 20 m RISE BETWEEN THE OUTDOOR UNIT AND THE HYDRAULIC MODULE

WH-UD07CE5-A
WH-UD09CE5-A

WH-UD09CE8 WH-UD12CE8
WH-UD12CE5-A WH-UD14CE8
WH-UD14CE5-A WH-UD16CE8
WH-UD16CE5-A

ENERGY AND ENVIRONMENTAL EFFICIENCY

- 78% more efficient than an electrical convection system
- Maximum COP of 4.74 for the 9 kW model
- Environmentally-friendly refrigerant gas R410A

COMFORT

- Optimum control possible with a room temperature thermostat (not supplied)
- Maximum hydraulic module output temperature: 55 °C
- Power optimised based on the return water temperature
- Built-in management of the hot water cylinder and heating

EASY TO USE

- Control on the hydraulic module
- Easy programming on the control panel

EASY INSTALLATION AND MAINTENANCE

- Easy-to-access pressure gauge for easy control of the water pressure
- Easy-to-open hydraulic module and outdoor unit

WH-TD20B3E5

WH-TD30B3E5

high efficiency heating
INVERTER+

AQUAREA SDC // BI-BLOC // HIGH CONNECTIVITY // HEATING AND COOLING SINGLE-PHASE // THREE-PHASE

The Aquarea SDC range adapts equally well to an existing installation such as a boiler backup or to a new installation with floor heating, low-temperature radiators or even fan-coil heaters. These ranges can also be connected to a solar kit in order to increase efficiency and minimize the impact on the ecosystem. Finally, it is possible to connect a thermostat for even better heating and cooling control and management.

environmentally friendly refrigerant R410A | down to -20°C in heating mode OUTDOOR TEMPERATURE | boiler connection RETROFIT | solar panels connection SOLAR KIT | domestic hot water DHW

BI-BLOC // HIGH-CONNECTIVITY // HEATING AND COOLING // SDC

			SINGLE-PHASE					THREE-PHASE			
Indoor unit			**WH-SDC07C3E5**	**WH-SDC09C3E5**	**WH-SDC12C6E5**	**WH-SDC14C6E5**	**WH-SDC16C6E5**	**WH-SDC09C9E8**	**WH-SDC12C9E8**	**WH-SDC14C9E8**	**WH-SDC16C9E8**
Heating Capacity at +7°C		kW	7	9	12	14	16	9	12	14	16
COP at +7°C with heating water temperature at 35°C			4,4	4,09	4,67	4,5	4,23	4,74	4,67	4,5	4,23
Heating Capacity at -7°C		kW	5,15	5,9	10	10,7	11,4	9	10	10,7	11,4
COP at -7°C with heating water temperature at 35°C			2,65	2,5	2,7	2,62	2,55	2,81	2,7	2,62	2,55
Heating Capacity at -15°C		kW	4,6	5,9	8,9	9,5	10,3	8,3	8,9	9,5	10,3
COP at -15°C with heating water temperature at 35°C			2,3	2,2	2,43	2,35	2,33	2,55	2,43	2,35	2,33
Cooling capacity at 35°C			6	7	10	11,5	12,2	7	10	11,5	12,2
EER at 35°C with cooling water temperature at 7/12°C			**2,2**	**2,1**	**2,39**	**2,24**	**2,19**	**2,68**	**2,42**	**2,25**	2,19
Dimensions (H x W x D)		mm	892 x 502 x 353	892 x 502 x 353	892 x 502 x 353	892 x 502 x 353	892 x 502 x 353	892 x 502 x 353	892 x 502 x 353	892 x 502 x 353	892 x 502 x 353
Weight		kg	45	45	51	51	51	51	52	52	52
Water pipe connector			R1 1/4	R1 1/4	R1 1/4	R1 1/4	R1 1/4	R1 1/4	R1 1/4	R1 1/4	R1 1/4
Pump	No. of Speed		3	3	3	3	3	3	3	3	3
	Input power(max)	W	75	75	190	190	190	190	190	190	190
Heating water flow (_T=5 K. 35°C)		l/min	20,1	25,8	34,4	40,1	45,9	25,8	34,4	40,1	45,9
Capacity of integrated electric heater		kW	3	3	6	6	6	3	9	9	9
Input Power		kW	1,59 / 2,30	2,2 / 2,9	2,57 / 3,6	3,11 / 4,4	3,78 / 4,8	1,9 / 2,25	2,57 / 3,55	3,11 / 4,4	3,78 /4,8
Running and starting Current		A	7,30 / 10,40	10,1 / 13,1	11,7 / 16,1	14,1 / 19,7	17,1 / 21,5	2,9 / 3,4	3,9 / 5,3	4,7 / 6,6	5,7 / 7,2
Maximum Current		A	21	22,9	24	25	26	7,5	8,8	9,4	9,9
Outdoor unit			**WH-UD07CE5-A**	**WH-UD09CE5-A**	**WH-UD12CE5-A**	**WH-UD14CE5-A**	**WH-UD16CE5-A**	**WH-UD09CE8**	**WH-UD12CE8**	**WH-UD14CE8**	**WH-UD16CE8**
Sound pressure level		dB(A)	48	49	50	51	53	49	50	51	53
Sound power level		dB	66	67	67	68	70	66	67	68	70
Dimensions (H x W x D)		mm	795 x 900 x 320	795 x 900 x 320	1340 x 900 x 320	1340 x 900 x 320	1340 x 900 x 320	1340 x 900 x 320	1340 x 900 x 320	1340 x 900 x 320	1340 x 900 x 320
Weight		KG	66	66	106	106	106	109	109	109	109
Pipe Diameter	Liquid	mm (Inch)	6,35 (1/4")	6,35 (1/4")	9,52 (3/8")	9,52 (3/8")	9,52 (3/8")	9,52 (3/8")	9,52 (3/8")	9,52 (3/8")	9,52 (3/8")
	Gas	mm (Inch)	15,88 (5/8")	15,88 (5/8")	15,88 (5/8")	15,88 (5/8")	15,88 (5/8")	15,88 (5/8")	15,88 (5/8")	15,88 (5/8")	15,88 (5/8")
Refrigerant (R410A)		kg	1,45	1,45	2,75	2,75	2,75	2,75	2,75	2,75	2,95
Pipe Length Range		m	3 – 30	3 – 30	3 – 40	3 – 40	3 – 40	3 – 40	3 – 40	3 – 40	3 – 40
Pipe Length for nominal capacity		m	7	7	7	7	7	7	7	7	7
Pipe Length for additional gas		m	10	10	30	30	30	30	30	30	30
Additional Gas Amount (R410A)		g/m	30	30	50	50	50	50	50	50	50
I/D&O/D Hight Difference		m	20	20	30	30	30	30	30	30	30
Operation Range	Outdoor Ambient	°C	–20 to 35	–20 to 35	–20 to 35	–20 to 35	–20 to 35	–20 to 35	–20 to 35	–20 to 35	–20 to 35
	Water Outlet (at-2/-7/-15) 2)	°C	25 – 55 / 5 – 20	25 – 55 / 5 – 20	25 – 55 / 5 – 20	25 – 55 / 5 – 20	25 – 55 / 5 – 20	25 – 55 / 5 – 20	25 – 55 / 5 – 20	25 – 55 / 5 – 20	25 – 55 / 5 – 20

OPTIONAL SANITARY TANK

SANITARY TANK			WH-TD20B3E5	WH-TD30B3E5
Water volume		L	198	287
Max. water temperature		**°C**	**75**	**75**
Dimension	Hight	mm	1.150	1.600
	Diameter		580	580
Weight		kg	46	60
Electric heater		kW	3	3
Power supply			Single Phase	Single Phase
Material inside tank			Inox	Inox

Performance calculation in agreement with Eurovent.
Sound pressure measured at 1 m from the outdoor unit and at 1.5-m height
Conditions : Water input temperature: 30 °C. Water output temperature: 35 °

TECHNICAL FOCUS

- RANGE FROM 7 TO 16 KW, SINGLE AND THREE-PHASE
- MAXIMUM HYDRAULIC MODULE OUTPUT TEMPERATURE: 55 °C
- WORKS DOWN TO –20 °C
- MAXIMUM 20 m RISE BETWEEN THE OUTDOOR UNIT AND THE HYDRAULIC MODULE

WH-UD07CE5-A
WH-UD09CE5-A

WH-UD09CE8 WH-UD12CE8
WH-UD12CE5-A WH-UD14CE8
WH-UD14CE5-A WH-UD16CE8
WH-UD16CE5-A

ENERGY AND ENVIRONMENTAL EFFICIENCY
- 78% more efficient than an electrical convection system
- Maximum COP of 4.74 for the 9 kW model
- Environmentally-friendly refrigerant gas R410A

COMFORT
- Optimum control possible with a room temperature thermostat (not supplied)
- Maximum hydraulic module output temperature: 55 °C
- Power optimised based on the return water temperature
- Built-in management of the hot water cylinder and heating

EASY TO USE
- Control on the hydraulic module
- Easy programming on the control panel

EASY INSTALLATION AND MAINTENANCE
- Easy-to-access pressure gauge for easy control of the water pressure
- Easy-to-open hydraulic module and outdoor unit

WH-TD20B3E5

WH-TD30B3E5

high efficiency heating

INVERTER+

AQUAREA SXF // BI-BLOC // T-CAP // HEATING ONLY SINGLE-PHASE // THREE-PHASE

The Aquarea SXF is the new Aquarea product from Panasonic for central heating. T-CAP stands for Total capacity as this new line-up is able to keep the same nominal capacity even at -15°C without the help of an electrical booster heater. T-CAP is also able to provide extremely high efficiency, whatever the outside temperature or the water temperature.

The new SXF is ideal for houses where keeping the same capacity is important such as new houses or houses without support from an external boiler.

The SXF can be adapted to an existing installation such as a boiler backup or to a new installation with floor heating, low-temperature radiators or even fan-coil heaters. These ranges can also be connected to a solar kit in order to increase efficiency and minimize the impact on the ecosystem. Finally, it is possible to connect a thermostat for even better heating or cooling control and management.

environmentally friendly refrigerant R410A | down to -20°C in heating mode OUTDOOR TEMPERATURE | boiler connection RETROFIT | solar panels connection SOLAR KIT | domestic hot water DHW

NEW 2011

BI-BLOC // AQUAREA T-CAP // HEATING ONLY // SXF						
			SINGLE-PHASE		THREE-PHASE	
Indoor unit			**WH-SXF09D3E5**	**WH-SXF12D6E5**	**WH-SXF09D3E8**	**WH-SXF12D9E8**
Heating Capacity at +7°C		kW	9	12	9	12
COP at +7°C with heating water temperature at 35°C			4,74	4,67	4,74	4,67
Heating Capacity at -7°C		kW	9	12	9	12
COP at -7°C			2,81	2,7	2,81	2,7
Heating Capacity at -15°C		kW	9	12	9	12
COP at -15°C with heating water temperature at 35°C			2,54	2,43	2,54	2,43
Dimensions (H x W x D)		mm	892 x 502 x 353	892 x 502 x 353	892 x 502 x 353	892 x 502 x 353
Weight		kg	43	49	50	51
Water pipe connector			R1 1/4	R1 1/4	R1 1/4	R1 1/4
Pump	No. of Speed		3	3	3	3
	Input power(max)	W	100	190	190	190
Heating water flow (_T=5 K. 35°C)		l/min	25,8	34,4	25,8	34,4
Capacity of integrated electric heater		kW	3	6	3	9
Input Power		kW	1,9	2,57	1,9	2,57
Running and starting Current		A	10,1	11,7	2,9	3,9
Maximum Current		A	22,9	24	7,5	8,8
Outdoor unit			**WH-UX09DE5**	**WH-UX12DE5**	**WH-UX09DE8**	**WH-UX12DE8**
Sound pressure level		dB(A)	49	50	49	50
Sound power level		dB	67	67	66	67
Dimensions (H x W x D)		mm	795 x 900 x 320	1340 x 900 x 320	1340 x 900 x 320	1340 x 900 x 320
Weight		KG	66	106	109	109
Pipe Diameter	Liquid	mm (Inch)	6,35 (1/4")	9,52 (3/8")	9,52 (3/8")	9,52 (3/8")
	Gas	mm (Inch)	15,88 (5/8")	15,88 (5/8")	15,88 (5/8")	15,88 (5/8")
Refrigerant (R410A)		kg	1,45	2,75	2,75	2,75
Pipe Length Range		m	3 – 30	3 – 40	3 – 40	3 – 40
Pipe Length for nominal capacity		m	7	7	7	7
Pipe Length for additional gas		m	10	30	30	30
Additional Gas Amount (R410A)		g/m	30	50	50	50
I/D&O/D Hight Difference		m	20	30	30	30
Operation Range	Outdoor Ambient	°C	–20 to 35	–20 to 35	–20 to 35	–20 to 35
	Water Outlet (at-2/-7/-15) 2)	°C	25 – 55	25 – 55	25 – 55	25 – 55

OPTIONAL SANITARY TANK				
SANITARY TANK			WH-TD20B3E5	WH-TD30B3E5
Water volume		L	198	287
Max. water temperature		°C	75	75
Dimension	Hight	mm	1.150	1.600
	Diameter		580	580
Weight		kg	46	60
Electric heater		kW	3	3
Power supply			Single Phase	Single Phase
Material inside tank			Inox	Inox

* Tentative specifications

Performance calculation in agreement with Eurovent.
Sound pressure measured at 1 m from the outdoor unit and at 1.5-m height
Conditions : Water input temperature: 30 °C. Water output temperature: 35 °

TECHNICAL FOCUS

- RANGE FROM 7 TO 16 KW, SINGLE AND THREE-PHASE
- MAXIMUM HYDRAULIC MODULE OUTPUT TEMPERATURE: 55 °C
- WORKS DOWN TO –20 °C
- MAXIMUM 20 m RISE BETWEEN THE OUTDOOR UNIT AND THE HYDRAULIC MODULE

WH-UX09DE5

WH-UX12DE5
WH-UX09DE8
WH-UX12DE8

ENERGY AND ENVIRONMENTAL EFFICIENCY

- 78% more efficient than an electrical convection system
- Maximum COP of 4.74 for the 9 kW model
- Environmentally-friendly refrigerant gas R410A

COMFORT

- Optimum control possible with a room temperature thermostat (not supplied)
- Maximum hydraulic module output temperature: 55 °C
- Power optimised based on the return water temperature
- Built-in management of the hot water cylinder and heating

EASY TO USE

- Control on the hydraulic module
- Easy programming on the control panel

EASY INSTALLATION AND MAINTENANCE

- Easy-to-access pressure gauge for easy control of the water pressure
- Easy-to-open hydraulic module and outdoor unit

WH-TD20B3E5

WH-TD30B3E5

high efficiency heating
INVERTER+

AQUAREA SXC // BI-BLOC // T-CAP // HEATING AND COOLING SINGLE-PHASE // THREE-PHASE

The Aquarea SXC is the new Aquarea product from Panasonic for heating and cooling. T-CAP stands for Total capacity as this new line-up is able to keep the same nominal capacity even at -15°C without the help of an electrical booster heater. T-CAP is also able to provide extremely high efficiency, whatever the outside temperature or the water temperature.

The new SXC is ideal for houses where keeping the same capacity is important such as new houses or houses without support from an external boiler.

The SXC can be adapted to an existing installation such as a boiler backup or to a new installation with floor heating, low-temperature radiators or even fan-coil heaters. These ranges can also be connected to a solar kit in order to increase efficiency and minimize the impact on the ecosystem. Finally, it is possible to connect a thermostat for even better heating or cooling control and management.

environmentally friendly refrigerant R410A | down to -20°C in heating mode OUTDOOR TEMPERATURE | boiler connection RETROFIT | solar panels connection SOLAR KIT | domestic hot water DHW

BI-BLOC // AQUAREA T-CAP // HEATING AND COOLING // SXC						
			SINGLE-PHASE		SINGLE-PHASE	
Indoor unit			**WH-SXC09D3E5**	**WH-SXC12D6E5**	**WH-SXC09D3E8**	**WH-SXC12D9E8**
Heating Capacity at +7°C		kW	9	12	9	12
COP at +7°C with heating water temperature at 35°C			4,74	4,67	4,74	4,67
Heating Capacity at -7°C		kW	9	12	9	12
COP at -7°C with heating water temperature at 35°C			2,81	2,7	2,81	2,7
Heating Capacity at -15°C		kW	9	12	9	12
COP at -15°C with heating water temperature at 35°C			2,54	2,43	2,54	2,43
Cooling capacity at 35°C			7	10	7	10
EER at 35°C with cooling water temperature at 7/12°C			2,1	2,39	2,1	2,39
Dimensions (H x W x D)		mm	892 x 502 x 353	892 x 502 x 353	892 x 502 x 353	892 x 502 x 353
Weight		kg	43	49	50	51
Water pipe connector			R1 1/4	R1 1/4	R1 1/4	R1 1/4
Pump	No. of Speed		3	3	3	3
	Input power(max)	W	100	190	190	190
Heating water flow (_T=5 K. 35°C)		l/min	25,8	34,4	25,8	34,4
Capacity of integrated electric heater		kW	3	6	3	9
Input Power		kW	1,9	2,57	1,9	2,57
Running and starting Current		A	10,1	11,7	2,9	3,9
Maximum Current		A	22,9	24	7,5	8,8
Outdoor unit			**WH-UX09DE5**	**WH-UX12DE5**	**WH-UX09DE8**	**WH-UX12DE8**
Sound pressure level		dB(A)	49	50	49	50
Sound power level		dB	67	67	66	67
Dimensions (H x W x D)		mm	795 x 900 x 320	1340 x 900 x 320	1340 x 900 x 320	1340 x 900 x 320
Weight		KG	66	106	109	109
Pipe Diameter	Liquid	mm (Inch)	6,35 (1/4")	9,52 (3/8")	9,52 (3/8")	9,52 (3/8")
	Gas	mm (Inch)	15,88 (5/8")	15,88 (5/8")	15,88 (5/8")	15,88 (5/8")
Refrigerant (R410A)		kg	1,45	2,75	2,75	2,75
Pipe Length Range		m	3 – 30	3 – 40	3 – 40	3 – 40
Pipe Length for nominal capacity		m	7	7	7	7
Pipe Length for additional gas		m	10	30	30	30
Additional Gas Amount (R410A)		g/m	30	50	50	50
I/D&O/D Hight Difference		m	20	30	30	30
Operation Range	Outdoor Ambient	°C	–20 to 35	–20 to 35	–20 to 35	–20 to 35
	Water Outlet (at-2/-7/-15) 2)	°C	25 – 55	25 – 55	25 – 55	25 – 55

OPTIONAL SANITARY TANK				
SANITARY TANK			WH-TD20B3E5	WH-TD30B3E5
Water volume		L	198	287
Max. water temperature		°C	75	75
Dimension	Hight	mm	1.150	1.600
	Diameter		580	580
Weight		kg	46	60
Electric heater		kW	3	3
Power supply			Single Phase	Single Phase
Material inside tank			Inox	Inox

* Tentative specifications

Performance calculation in agreement with Eurovent.
Sound pressure measured at 1 m from the outdoor unit and at 1.5-m height
Conditions : Water input temperature: 30 °C. Water output temperature: 35 °

TECHNICAL FOCUS

- RANGE FROM 7 TO 16 KW, SINGLE AND THREE-PHASE
- MAXIMUM HYDRAULIC MODULE OUTPUT TEMPERATURE: 55 °C
- WORKS DOWN TO –20 °C
- MAXIMUM 20 m RISE BETWEEN THE OUTDOOR UNIT AND THE HYDRAULIC MODULE

WH-UX09DE5

WH-UX12DE5
WH-UX09DE8
WH-UX12DE8

ENERGY AND ENVIRONMENTAL EFFICIENCY

- 78% more efficient than an electrical convection system
- Maximum COP of 4.74 for the 9 kW model
- Environmentally-friendly refrigerant gas R410A

COMFORT

- Optimum control possible with a room temperature thermostat (not supplied)
- Maximum hydraulic module output temperature: 55 °C
- Power optimised based on the return water temperature
- Built-in management of the hot water cylinder and heating

EASY TO USE

- Control on the hydraulic module
- Easy programming on the control panel

EASY INSTALLATION AND MAINTENANCE

- Easy-to-access pressure gauge for easy control of the water pressure
- Easy-to-open hydraulic module and outdoor unit

WH-TD20B3E5

WH-TD30B3E5

high efficiency heating
INVERTER+

AQUAREA MDF // MONO-BLOC // HIGH CONNECTIVITY // HEATING ONLY SINGLE-PHASE // THREE-PHASE

The Aquarea MDF range adapts equally well to an existing installation such as a boiler backup or to a new installation with floor heating, low-temperature radiators or even fan-coil heaters. These ranges can also be connected to a solar kit in order to increase efficiency and minimize the impact on the ecosystem. Finally, it is possible to connect a thermostat for even better heating control and management.

environmentally friendly refrigerant — R410A
down to -20°C in heating mode — OUTDOOR TEMPERATURE
boiler connection — RETROFIT
solar panels connection — SOLAR KIT
domestic hot water — DHW

MONO-BLOC // HIGH-CONNECTIVITY // HEATING ONLY // MDF										
			SINGLE-PHASE				THREE-PHASE			
Outdoor unit			WH-MDF09C3E5	WH-MDF12C6E5	WH-MDF14C6E5	WH-MDF16C6E5	WH-MDF09C3E8	WH-MDF12C9E8	WH-MDF14C9E8	WH-MDF16C9E8
Heating Capacity at +7°C		kW	9	12	14	16	9	12	14	16
COP at +7°C with heating water temperature at 35°C			4,74	4,67	4,5	4,23	4,74	4,67	4,5	4,23
Heating Capacity at -7°C		kW	9	10	10,7	11,4	9	10	10,7	11,4
COP at -7°C			2,81	2,7	2,62	2,55	2,81	2,7	2,62	2,55
Heating Capacity at -15°C		kW	8,3	8,9	9,5	10,3	8,3	8,9	9,5	10,3
COP at -15°C with heating water temperature at 35°C			2,55	2,43	2,35	2,33	2,55	2,43	2,35	2,33
Sound pressure level			49	50	51	53	49	50	51	53
Sound power level			66	67	68	70	66	67	68	70
Dimensions (H x W x D)		mm	1410 x 1287 x 320	1410 x 1287 x 320	1410 x 1287 x 320	1410 x 1287 x 320	1410 x 1287 x 320	1410 x 1287 x 320	1410 x 1287 x 320	1410 x 1287 x 320
Weight		kg	153	153	153	153	157	157	157	157
Water pipe connector			R1 1/4	R1 1/4	R1 1/4	R1 1/4	R1 1/4	R1 1/4	R1 1/4	R1 1/4
Pump	No. of Speed		3	3	3	3	3	3	3	3
	Input power(max)	W	190	190	190	190	190	190	190	190
Heating water flow (_T=5 K. 35°C)		l/min	25,8	34,4	40,1	45,9	25,8	34,4	40,1	45,9
Capacity of integrated electric heater		kW	3	6	6	6	3	9	9	9
Input Power		kW	1,9	2,57	3,11	3,78	1,9	2,57	3,11	3,78
Running and starting Current		A	8,7	11,7	14,1	17,1	2,9	3,9	4,7	5,7
Maximum Current		A	22,9	25	26	22,9	7,5	8,8	9,4	9,9
Operation Range	Outdoor Ambient	°C	−20 to 35	−20 to 35	−20 to 35	−20 to 35	−20 to 35	−20 to 35	−20 to 35	−20 to 35
	Water Outlet (at-2/-7/-15) 2)	°C	25 – 55	25 – 55	25 – 55	25 – 55	25 – 55	25 – 55	25 – 55	25 – 55

OPTIONAL SANITARY TANK				
SANITARY TANK			WH-TD20B3E5	WH-TD30B3E5
Water volume		L	198	287
Max. water temperature		°C	75	75
Dimension	Hight	mm	1.150	1.600
	Diameter		580	580
Weight		kg	46	60
Electric heater		kW	3	3
Power supply			Single Phase	Single Phase
Material inside tank			Inox	Inox

Performance calculation in agreement with Eurovent.
Sound pressure measured at 1 m from the outdoor unit and at 1.5-m height
Conditions : Water input temperature: 30 °C. Water output temperature: 35 °

TECHNICAL FOCUS

- RANGE FROM 9 TO 16 KW, SINGLE AND THREE-PHASE
- MAXIMUM HYDRAULIC MODULE OUTPUT TEMPERATURE: 55 °C
- WORKS DOWN TO –20 °C

ENERGY AND ENVIRONMENTAL EFFICIENCY
- 78% more efficient than an electrical convection system
- Maximum COP of 4.74 for the 9 kW model

COMFORT
- Optimum control possible with a room temperature thermostat (not supplied)
- Maximum hydraulic module output temperature: 55 °C
- Power optimised according to the return water temperature
- Autonomous management of the hot water cylinder and heating

EASY TO USE
- Single-unit range, with no refrigerant connections
- Wired control panel for installation in the house
- Easy programming on the control panel

EASY INSTALLATION AND MAINTENANCE
- Outdoor unit easy to open for maintenance

WH-TD20B3E5 WH-TD30B3E5

high efficiency heating
INVERTER+

AQUAREA MDF // MONO-BLOC // HIGH CONNECTIVITY // HEATING ONLY SINGLE-PHASE // THREE-PHASE

The Aquarea MDF range adapts equally well to an existing installation such as a boiler backup or to a new installation with floor heating, low-temperature radiators or even fan-coil heaters. These ranges can also be connected to a solar kit in order to increase efficiency and minimize the impact on the ecosystem. Finally, it is possible to connect a thermostat for even better heating control and management.

environmentally friendly refrigerant R410A

down to -20°C in heating mode OUTDOOR TEMPERATURE

boiler connection RETROFIT

solar panels connection SOLAR KIT

domestic hot water DHW

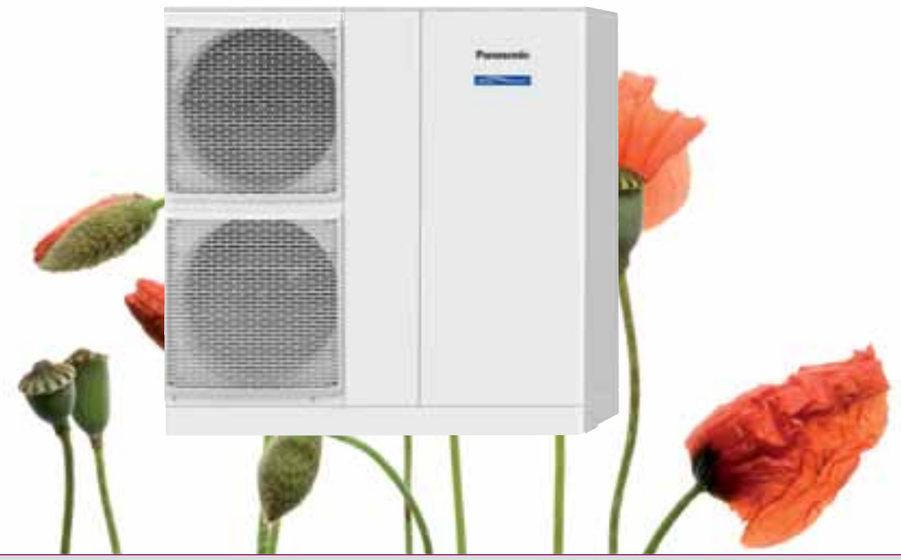

MONO-BLOC // HIGH-CONNECTIVITY // HEATING ONLY // MDF										
			SINGLE-PHASE				THREE-PHASE			
Outdoor unit			WH-MDF09C3E5	WH-MDF12C6E5	WH-MDF14C6E5	WH-MDF16C6E5	WH-MDF09C3E8	WH-MDF12C9E8	WH-MDF14C9E8	WH-MDF16C9E8
Heating Capacity at +7°C		kW	9	12	14	16	9	12	14	16
COP at +7°C with heating water temperature at 35°C			4,74	4,67	4,5	4,23	4,74	4,67	4,5	4,23
Heating Capacity at -7°C		kW	9	10	10,7	11,4	9	10	10,7	11,4
COP at -7°C			2,81	2,7	2,62	2,55	2,81	2,7	2,62	2,55
Heating Capacity at -15°C		kW	8,3	8,9	9,5	10,3	8,3	8,9	9,5	10,3
COP at -15°C with heating water temperature at 35°C			2,55	2,43	2,35	2,33	2,55	2,43	2,35	2,33
Sound pressure level			49	50	51	53	49	50	51	53
Sound power level			66	67	68	70	66	67	68	70
Dimensions (H x W x D)		mm	1410 x 1287 x 320	1410 x 1287 x 320	1410 x 1287 x 320	1410 x 1287 x 320	1410 x 1287 x 320	1410 x 1287 x 320	1410 x 1287 x 320	1410 x 1287 x 320
Weight		kg	153	153	153	153	157	157	157	157
Water pipe connector			R1 1/4	R1 1/4	R1 1/4	R1 1/4	R1 1/4	R1 1/4	R1 1/4	R1 1/4
Pump	No. of Speed		3	3	3	3	3	3	3	3
	Input power(max)	W	190	190	190	190	190	190	190	190
Heating water flow (_T=5 K. 35°C)		l/min	25,8	34,4	40,1	45,9	25,8	34,4	40,1	45,9
Capacity of integrated electric heater		kW	3	6	6	6	3	9	9	9
Input Power		kW	1,9	2,57	3,11	3,78	1,9	2,57	3,11	3,78
Running and starting Current		A	8,7	11,7	14,1	17,1	2,9	3,9	4,7	5,7
Maximum Current		A	22,9	25	26	22,9	7,5	8,8	9,4	9,9
Operation Range	Outdoor Ambient	°C	−20 to 35	−20 to 35	−20 to 35	−20 to 35	−20 to 35	−20 to 35	−20 to 35	−20 to 35
	Water Outlet (at-2/-7/-15) 2)	°C	25 – 55	25 – 55	25 – 55	25 – 55	25 – 55	25 – 55	25 – 55	25 – 55

OPTIONAL SANITARY TANK				
SANITARY TANK			WH-TD20B3E5	WH-TD30B3E5
Water volume		L	198	287
Max. water temperature		°C	75	75
Dimension	Hight	mm	1.150	1.600
	Diameter		580	580
Weight		kg	46	60
Electric heater		kW	3	3
Power supply			Single Phase	Single Phase
Material inside tank			Inox	Inox

Performance calculation in agreement with Eurovent.
Sound pressure measured at 1 m from the outdoor unit and at 1.5-m height
Conditions : Water input temperature: 30 °C. Water output temperature: 35 °

TECHNICAL FOCUS

- RANGE FROM 9 TO 16 KW, SINGLE AND THREE-PHASE
- MAXIMUM HYDRAULIC MODULE OUTPUT TEMPERATURE: 55 °C
- WORKS DOWN TO –20 °C

ENERGY AND ENVIRONMENTAL EFFICIENCY
- 78% more efficient than an electrical convection system
- Maximum COP of 4.74 for the 9 kW model

COMFORT
- Optimum control possible with a room temperature thermostat (not supplied)
- Maximum hydraulic module output temperature: 55 °C
- Power optimised according to the return water temperature
- Autonomous management of the hot water cylinder and heating

EASY TO USE
- Single-unit range, with no refrigerant connections
- Wired control panel for installation in the house
- Easy programming on the control panel

EASY INSTALLATION AND MAINTENANCE
- Outdoor unit easy to open for maintenance

WH-TD20B3E5 WH-TD30B3E5

high efficiency heating
INVERTER+

AQUAREA MDC // MONO-BLOC // HIGH CONNECTIVITY // HEATING AND COOLING SINGLE-PHASE // THREE-PHASE

The Aquarea MDC range adapts equally well to an existing installation such as a boiler backup or to a new installation with floor heating, low-temperature radiators or even fan-coil heaters. These ranges can also be connected to a solar kit in order to increase efficiency and minimize the impact on the ecosystem. Finally, it is possible to connect a thermostat for even better heating and cooling control and management.

environmentally friendly refrigerant R410A
down to -20°C in heating mode OUTDOOR TEMPERATURE
boiler connection RETROFIT
solar panels connection SOLAR KIT
domestic hot water DHW

MONO-BLOC // HIGH-CONNECTIVITY // HEATING AND COOLING // MDC

			SINGLE-PHASE				THREE-PHASE			
Outdoor unit			WH-MDC09C3E5	WH-MDC12C6E5	WH-MDC14C6E5	WH-MDC16C6E5	WH-MDC09C3E8	WH-MDC12C9E8	WH-MDC14C9E8	WH-MDC16C9E8
Heating Capacity at +7°C		kW	9	12	14	16	9	12	14	16
COP at +7°C with heating water temperature at 35°C			4,74	4,67	4,5	4,23	4,74	4,67	4,5	4,23
Heating Capacity at -7°C		kW	9	10	10,7	11,4	9	10	10,7	11,4
COP at -7°C with heating water temperature at 35°C			2,81	2,7	2,62	2,55	2,81	2,7	2,62	2,55
Heating Capacity at -15°C		kW	8,3	8,9	9,5	10,3	8,3	8,9	9,5	10,3
COP at -15°C with heating water temperature at 35°C			2,55	2,43	2,35	2,33	2,55	2,43	2,35	2,33
Cooling capacity at 35°C			7	10	11,5	12,2	7	10	11,5	12,2
EER at 35°C with cooling water temperature at 7/12°C			2,68	2,39	2,25	2,19	2,68	2,39	2,25	2,19
Sound pressure level			49	50	51	53	49	50	51	53
Sound power level			66	67	68	70	66	67	68	70
Dimensions (H x W x D)		mm	1410 x 1287 x 320	1410 x 1287 x 320	1410 x 1287 x 320	1410 x 1287 x 320	1410 x 1287 x 320	1410 x 1287 x 320	1410 x 1287 x 320	1410 x 1287 x 320
Weight		kg	153	153	153	153	157	157	157	157
Water pipe connector			R1 1/4	R1 1/4	R1 1/4	R1 1/4	R1 1/4	R1 1/4	R1 1/4	R1 1/4
Pump	No. of Speed		3	3	3	3	3	3	3	3
	Input power(max)	W	190	190	190	190	190	190	190	190
Heating water flow (_T=5 K. 35°C)		l/min	25,8	34,4	40,1	45,9	25,8	34,4	40,1	45,9
Capacity of integrated electric heater		kW	3	6	6	6	3	9	9	9
Input Power		kW	1,9 / 2,25	2,57 / 3,6	3,11 / 4,4	3,78 / 4,8	1,9 / 2,25	2,57 / 3,6	3,11 / 4,4	3,78 / 4,8
Running and starting Current		A	8,7 / 10,2	11,6 / 16,1	14,1 / 19,7	17,1 / 21,5	2,9 / 3,4	3,9 / 5,3	4,7 / 6,6	5,7 / 7,2
Maximum Current		A	22,9	24	25	21,5	7,5	8,8	9,4	9,9
Operation Range	Outdoor Ambient	°C	–20 to 35	–20 to 35	–20 to 35	–20 to 35	–20 to 35	–20 to 35	–20 to 35	–20 to 35
	Water Outlet (at-2/-7/-15) 2)	°C	25 – 55	25 – 55	25 – 55	25 – 55	25 – 55	25 – 55	25 – 55	25 – 55

OPTIONAL SANITARY TANK

SANITARY TANK			WH-TD20B3E5	WH-TD30B3E5
Water volume		L	198	287
Max. water temperature		°C	75	75
Dimension	Hight	mm	1.150	1.600
	Diameter		580	580
Weight		kg	46	60
Electric heater		kW	3	3
Power supply			Single Phase	Single Phase
Material inside tank			Inox	Inox

Performance calculation in agreement with Eurovent.
Sound pressure measured at 1 m from the outdoor unit and at 1.5-m height
Conditions : Water input temperature: 30 °C. Water output temperature: 35 °

TECHNICAL FOCUS

- RANGE FROM 9 TO 16 KW, SINGLE AND THREE-PHASE
- MAXIMUM HYDRAULIC MODULE OUTPUT TEMPERATURE: 55 °C
- WORKS DOWN TO –20 °C

ENERGY AND ENVIRONMENTAL EFFICIENCY
- 78% more efficient than an electrical convection system
- Maximum COP of 4.74 for the 9 kW model

COMFORT
- Optimum control possible with a room temperature thermostat (not supplied)
- Maximum hydraulic module output temperature: 55 °C
- Power optimised according to the return water temperature
- Autonomous management of the hot water cylinder and heating

EASY TO USE
- Single-unit range, with no refrigerant connections
- Wired control panel for installation in the house
- Easy programming on the control panel

EASY INSTALLATION AND MAINTENANCE
- Outdoor unit easy to open for maintenance

WH-TD20B3E5

WH-TD30B3E5

high efficiency heating
INVERTER+

AQUAREA MXF // MONO-BLOC // T-CAP // HEATING ONLY SINGLE-PHASE // THREE-PHASE

The Aquarea MXF is the new Aquarea product from Panasonic for central heating. T-CAP stands for Total capacity as this new line-up is able to keep the same nominal capacity even at -15°C without the help of an electrical booster heater. T-CAP is also able to provide extremely high efficiency, whatever the outside temperature or the water temperature.
The new MXF is ideal for houses where keeping the same capacity is important such as new houses or houses without support from an external boiler.
The MXF can be adapted to an existing installation such as a boiler backup or to a new installation with floor heating, low-temperature radiators or even fan-coil heaters. These ranges can also be connected to a solar kit in order to increase efficiency and minimize the impact on the ecosystem. Finally, it is possible to connect a thermostat for even better heating or cooling control and management.

environmentally friendly refrigerant R410A | down to -20°C in heating mode OUTDOOR TEMPERATURE | boiler connection RETROFIT | solar panels connection SOLAR KIT | domestic hot water DHW

NEW 2011

MONO-BLOC // AQUAREA T-CAP // HEATING ONLY // MXF						
			SINGLE-PHASE		SINGLE-PHASE	
Outdoor unit			WH-MXF09D3E5	WH-MXF12D6E5	WH-MXF09D3E8	WH-MXF12D9E8
Heating Capacity at +7°C		kW	9	12	9	12
COP at +7°C with heating water temperature at 35°C			4,74	4,67	4,74	4,67
Heating Capacity at -7°C		kW	9	12	9	12
COP at -7°C			2,81	2,7	2,81	2,7
Heating Capacity at -15°C		kW	9	12	9	12
COP at -15°C with heating water temperature at 35°C			2,54	2,43	2,54	2,43
Sound pressure level			49	50	49	50
Sound power level			66	67	66	67
Dimensions (H x W x D)		mm	1410 x 1287 x 320	1410 x 1287 x 320	1410 x 1287 x 320	1410 x 1287 x 320
Weight		kg	153	153	157	157
Water pipe connector			R1 1/4	R1 1/4	R1 1/4	R1 1/4
Pump	No. of Speed		3	3	3	3
	Input power(max)	W	190	190	190	190
Heating water flow (_T=5 K. 35°C)		l/min	25,8	34,4	25,8	34,4
Capacity of integrated electric heater		kW	3	6	3	9
Input Power		kW	1,9	2,57	1,9	2,57
Running and starting Current		A	8,7	11,7	2,9	3,9
Maximum Current		A	22,9	25	7,5	8,8
Operation Range	Outdoor Ambient	°C	–20 to 35	–20 to 35	–20 to 35	–20 to 35
	Water Outlet (at-2/-7/-15) 2)	°C	25 – 55	25 – 55	25 – 55	25 – 55

OPTIONAL SANITARY TANK				
SANITARY TANK			WH-TD20B3E5	WH-TD30B3E5
Water volume		L	198	287
Max. water temperature		°C	75	75
Dimension	Hight	mm	1.150	1.600
	Diameter		580	580
Weight		kg	46	60
Electric heater		kW	3	3
Power supply			Single Phase	Single Phase
Material inside tank			Inox	Inox

Performance calculation in agreement with Eurovent.
Sound pressure measured at 1 m from the outdoor unit and at 1.5-m height
Conditions : Water input temperature: 30 °C. Water output temperature: 35 °

* Tentative specifications

TECHNICAL FOCUS

- RANGE FROM 9 TO 16 KW, SINGLE AND THREE-PHASE
- MAXIMUM HYDRAULIC MODULE OUTPUT TEMPERATURE: 55 °C
- WORKS DOWN TO –20 °C

ENERGY AND ENVIRONMENTAL EFFICIENCY
- 78% more efficient than an electrical convection system
- Maximum COP of 4.74 for the 9 kW model

COMFORT
- Optimum control possible with a room temperature thermostat (not supplied)
- Maximum hydraulic module output temperature: 55 °C
- Power optimised according to the return water temperature
- Autonomous management of the hot water cylinder and heating

EASY TO USE
- Single-unit range, with no refrigerant connections
- Wired control panel for installation in the house
- Easy programming on the control panel

EASY INSTALLATION AND MAINTENANCE
- Outdoor unit easy to open for maintenance

WH-TD20B3E5

WH-TD30B3E5

high efficiency heating
INVERTER+

AQUAREA MXC // MONO-BLOC // T-CAP // HEATING AND COOLING SINGLE-PHASE // THREE-PHASE

The Aquarea MXC is the new Aquarea product from Panasonic for heating and cooling. T-CAP stands for Total capacity as this new line-up is able to keep the same nominal capacity even at -15°C without the help of an electrical booster heater. T-CAP is also able to provide extremely high efficiency, whatever the outside temperature or the water temperature.
The new MXC is ideal for houses where keeping the same capacity is important such as new houses or houses without support from an external boiler.
The MXC can be adapted to an existing installation such as a boiler backup or to a new installation with floor heating, low-temperature radiators or even fan-coil heaters. These ranges can also be connected to a solar kit in order to increase efficiency and minimize the impact on the ecosystem. Finally, it is possible to connect a thermostat for even better heating or cooling control and management.

environmentally friendly refrigerant R410A | down to -20°C in heating mode OUTDOOR TEMPERATURE | boiler connection RETROFIT | solar panels connection SOLAR KIT | domestic hot water DHW

NEW 2011

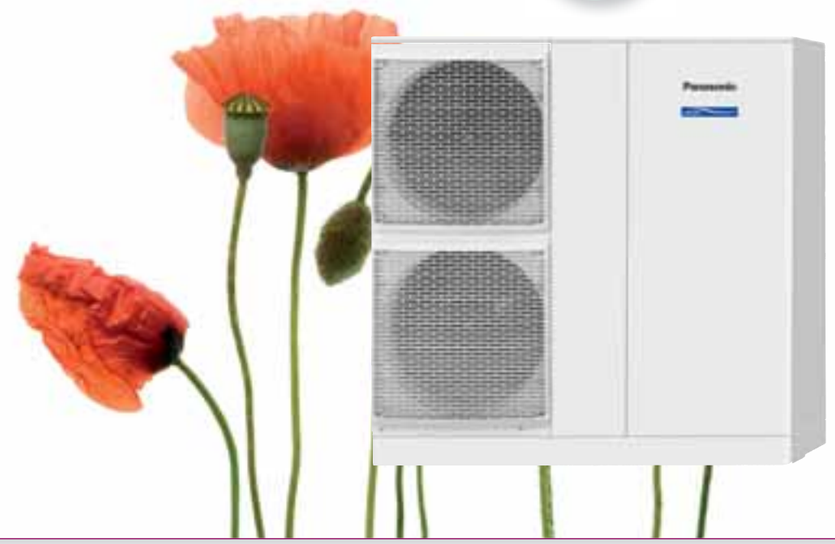

MONO-BLOC // AQUAREA T-CAP // HEATING AND COOLING// MXC						
			SINGLE-PHASE		THREE-PHASE	
Outdoor unit			WH-MXC09D3E5	WH-MXC12D6E5	WH-MXC09D3E8	WH-MXC12D9E8
Heating Capacity at +7°C		kW	9	12	9	12
COP at +7°C with heating water temperature at 35°C			4,74	4,67	4,74	4,67
Heating Capacity at -7°C		kW	9	12	9	12
COP at -7°C with heating water temperature at 35°C			2,81	2,7	2,81	2,7
Heating Capacity at -15°C		kW	9	12	9	12
COP at -15°C with heating water temperature at 35°C			2,54	2,43	2,54	2,43
Cooling capacity at 35°C			7	10	7	10
EER at 35°C with cooling water temperature at 7/12°C			2,1	2,39	2,1	2,39
Sound pressure level			49	50	49	50
Sound power level			66	67	66	67
Dimensions (H x W x D)		mm	1410 x 1283 x 320	1410 x 1283 x 320	1410 x 1283 x 320	1410 x 1283 x 320
Weight		kg	153	153	157	157
Water pipe connector			R1 1/4	R1 1/4	R1 1/4	R1 1/4
Pump	No. of Speed		3	3	3	3
	Input power(max)	W	190	190	190	190
Heating water flow (_T=5 K. 35°C)		l/min	25,8	34,4	25,8	34,4
Capacity of integrated electric heater		kW	3	6	3	9
Input Power		kW	1,9	2,57	1,9	2,57
Running and starting Current		A	8,7	11,7	2,9	3,9
Maximum Current		A	22,9	25	7,5	8,8
Operation Range	Outdoor Ambient	°C	–20 to 35	–20 to 35	–20 to 35	–20 to 35
	Water Outlet (at-2/-7/-15) 2)	°C	25 – 55	25 – 55	25 – 55	25 – 55

OPTIONAL SANITARY TANK				
SANITARY TANK			WH-TD20B3E5	WH-TD30B3E5
Water volume		L	198	287
Max. water temperature		°C	75	75
Dimension	Hight	mm	1.150	1.600
	Diameter		580	580
Weight		kg	46	60
Electric heater		kW	3	3
Power supply			Single Phase	Single Phase
Material inside tank			Inox	Inox

Performance calculation in agreement with Eurovent.
Sound pressure measured at 1 m from the outdoor unit and at 1.5-m height
Conditions : Water input temperature: 30 °C. Water output temperature: 35 °

* Tentative specifications

TECHNICAL FOCUS

- RANGE FROM 9 TO 16 KW, SINGLE AND THREE-PHASE
- MAXIMUM HYDRAULIC MODULE OUTPUT TEMPERATURE: 55 °C
- WORKS DOWN TO –20 °C

ENERGY AND ENVIRONMENTAL EFFICIENCY
- 78% more efficient than an electrical convection system
- Maximum COP of 4.74 for the 9 kW model

COMFORT
- Optimum control possible with a room temperature thermostat (not supplied)
- Maximum hydraulic module output temperature: 55 °C
- Power optimised according to the return water temperature
- Autonomous management of the hot water cylinder and heating

EASY TO USE
- Single-unit range, with no refrigerant connections
- Wired control panel for installation in the house
- Easy programming on the control panel

EASY INSTALLATION AND MAINTENANCE
- Outdoor unit easy to open for maintenance

WH-TD20B3E5

HEATING CAPACITY TABLE BASED ON OUTLET TEMPERATURE AND OUTSIDE TEMPERATURE

LWC	30		35		40		45		50		55	
Tamb	HC	IP	HC	IP	HC	IP	HC	IP	HC	IP	HC	IP
-15	4.60	1.87	4.60	2.00	4.60	2.19	4.60	2.42	4.55	2.68	4.50	3.00
-7	5.15	1.80	5.15	1.94	5.08	2.14	5.00	2.38	4.90	2.47	4.80	2.67
2	6.70	1.83	6.55	1.98	6.58	2.29	6.60	2.64	6.30	2.90	6.00	3.16
7	7.00	1.43	7.00	1.59	7.00	1.77	7.00	2.12	6.90	2.30	6.80	2.72
25	7.00	0.79	7.00	0.93	6.40	1.03	6.10	1.17	5.90	1.33	5.70	1.49

WH-SDF09C3E5 // WH-UD09CE5-A

LWC	30		35		40		45		50		55	
Tamb	HC	IP	HC	IP	HC	IP	HC	IP	HC	IP	HC	IP
-15	6.00	2.55	5.90	2.68	5.50	2.82	5.40	3.00	5.20	3.14	5.00	3.33
-7	6.10	2.16	5.90	2.36	5.85	2.63	5.80	2.90	5.80	3.06	5.80	3.22
2	6.80	1.87	6.70	2.16	6.70	2.38	6.60	2.64	6.30	2.90	6.00	3.16
7	9.00	1.93	9.00	2.20	9.00	2.45	9.00	2.81	8.95	3.23	8.90	3.87
25	9.00	1.07	9.00	1.27	8.40	1.40	8.00	1.59	7.80	1.81	7.50	2.03

WH-SDF12C6E5 // WH-UD12CE5-A

LWC	30		35		40		45		50		55	
Tamb	HC	IP	HC	IP	HC	IP	HC	IP	HC	IP	HC	IP
-15	9.30	3.50	8.90	3.66	8.50	3.83	8.10	3.99	7.50	4.09	7.00	4.20
-7	10.40	3.41	10.00	3.70	9.60	3.99	9.20	4.28	8.70	4.30	8.20	4.31
2	11.80	3.14	11.40	3.35	11.00	3.57	10.60	3.78	9.80	3.98	9.10	4.18
7	12.00	2.14	12.00	2.57	12.00	3.00	12.00	3.43	12.00	3.82	12.00	4.20
25	12.00	1.42	12.00	1.70	11.80	1.98	11.70	2.27	11.50	2.53	11.40	2.78

WH-SDF14C6E5 // WH-UD14CE5-A

LWC	30		35		40		45		50		55	
Tamb	HC	IP	HC	IP	HC	IP	HC	IP	HC	IP	HC	IP
-15	9.90	3.91	9.50	4.05	9.00	4.19	8.60	4.33	7.90	4.45	7.30	4.56
-7	11.10	3.73	10.70	4.08	10.20	4.43	9.80	4.78	9.10	4.76	8.50	4.74
2	12.90	3.51	12.40	3.73	11.90	3.95	11.40	4.17	10.40	4.29	9.50	4.40
7	14.00	2.60	14.00	3.11	14.00	3.63	14.00	4.14	13.60	4.61	13.30	5.08
25	14.00	1.75	14.00	2.10	14.00	2.45	14.00	2.80	14.00	3.05	14.00	3.44

WH-SDF16C6E5 // WH-UD16CE5-A

LWC	30		35		40		45		50		55	
Tamb	HC	IP	HC	IP	HC	IP	HC	IP	HC	IP	HC	IP
-15	10.60	4.13	10.30	4.42	10.00	4.71	9.70	5.00	8.80	4.98	7.90	4.95
-7	11.90	4.07	11.40	4.47	10.80	4.87	10.30	5.26	9.60	5.13	9.00	4.99
2	13.50	3.78	13.00	4.00	12.40	4.22	11.90	4.44	10.80	4.50	9.80	4.55
7	16.00	3.25	16.00	3.78	16.00	4.31	16.00	4.84	15.20	5.15	14.50	5.45
25	16.00	2.35	16.00	2.73	16.00	3.11	16.00	3.49	16.00	3.71	15.90	3.93

HYDRAULIC PUMP PERFORMANCE

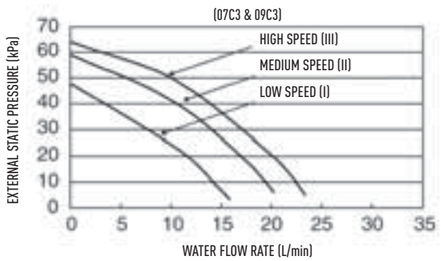

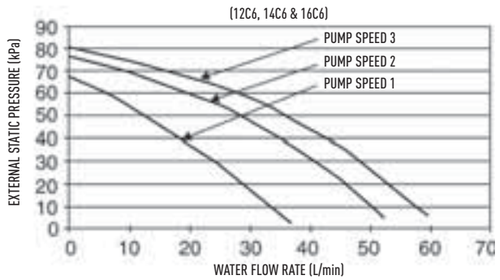

This data is measured by Panasonic in accordance with EN14511-2 standard.
This data is for reference purpose only, and does not guarantee the performance.

HC: Heating Capacity (kW)
IP: Power Input (kW)
LWC: Leaving Water Condenser Temperature (°C)
Tamb: Ambient Temperature (°C)

WH-SDF09C3E8 // WH-UD09CE8

LWC	30		35		40		45		50		55	
Tamb	HC	IP	HC	IP	HC	IP	HC	IP	HC	IP	HC	IP
-15	8.65	3.10	8.30	3.25	7.95	3.45	7.60	3.65	7.15	3.75	6.70	3.85
-7	9.35	2.95	9.00	3.20	8.85	3.58	8.70	3.96	8.30	3.93	7.90	3.90
2	9.31	2.39	9.00	2.55	9.00	2.82	9.00	3.09	8.90	3.53	8.80	3.98
7	9.00	1.58	9.00	1.90	9.00	2.20	9.00	2.50	9.00	2.80	9.00	3.10
25	9.00	1.09	9.00	1.28	8.73	1.48	8.46	1.68	8.28	1.86	8.10	2.04

WH-SDF12C9E8 // WH-UD12CE8

LWC	30		35		40		45		50		55	
Tamb	HC	IP	HC	IP	HC	IP	HC	IP	HC	IP	HC	IP
-15	9.30	3.50	8.90	3.66	8.50	3.83	8.10	3.99	7.50	4.09	7.00	4.20
-7	10.40	3.41	10.00	3.70	9.60	3.99	9.20	4.28	8.70	4.30	8.20	4.31
2	11.80	3.14	11.40	3.35	11.00	3.57	10.60	3.78	9.80	3.98	9.10	4.18
7	12.00	2.14	12.00	2.57	12.00	3.00	12.00	3.43	12.00	3.82	12.00	4.20
25	12.00	1.42	12.00	1.70	11.80	1.98	11.70	2.27	11.50	2.53	11.40	2.78

WH-SDF14C9E8 // WH-UD14CE8

LWC	30		35		40		45		50		55	
Tamb	HC	IP	HC	IP	HC	IP	HC	IP	HC	IP	HC	IP
-15	9.90	3.91	9.50	4.05	9.00	4.19	8.60	4.33	7.90	4.45	7.30	4.56
-7	11.10	3.73	10.70	4.08	10.20	4.43	9.80	4.78	9.10	4.76	8.50	4.74
2	12.90	3.51	12.40	3.73	11.90	3.95	11.40	4.17	10.40	4.29	9.50	4.40
7	14.00	2.60	14.00	3.11	14.00	3.63	14.00	4.14	13.60	4.61	13.30	5.08
25	14.00	1.75	14.00	2.10	14.00	2.45	14.00	2.80	14.00	3.05	14.00	3.44

WH-SDF16C9E8 // WH-UD16CE8

LWC	30		35		40		45		50		55	
Tamb	HC	IP	HC	IP	HC	IP	HC	IP	HC	IP	HC	IP
-15	10.60	4.13	10.30	4.42	10.00	4.71	9.70	5.00	8.80	4.98	7.90	4.95
-7	11.90	4.07	11.40	4.47	10.80	4.87	10.30	5.26	9.60	5.13	9.00	4.99
2	13.50	3.78	13.00	4.00	12.40	4.22	11.90	4.44	10.80	4.50	9.80	4.55
7	16.00	3.25	16.00	3.78	16.00	4.31	16.00	4.84	15.20	5.15	14.50	5.45
25	16.00	2.35	16.00	2.73	16.00	3.11	16.00	3.49	16.00	3.71	15.90	3.93

HYDRAULIC PUMP PERFORMANCE

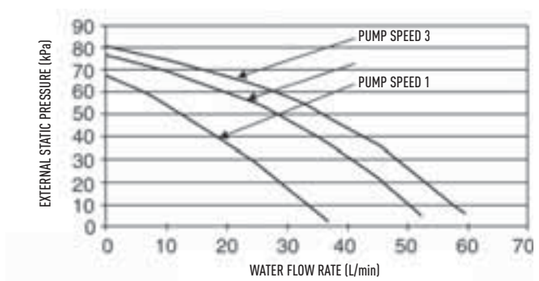

This data is measured by Panasonic in accordance with EN14511-2 standard.
This data is for reference purpose only, and does not guarantee the performance.
HC: Heating Capacity (kW)
IP: Power Input (kW)
LWC: Leaving Water Condenser Temperature (°C)
Tamb: Ambient Temperature (°C)

HEATING CAPACITY TABLE BASED ON OUTLET TEMPERATURE AND OUTSIDE TEMPERATURE

WH-MDF09C3E5

Water Out	30		35		40		45		50		55	
Outdoor Air	Capacity	Input Power	Capacity	Input Power	Capacity	Input Power	Capacity	Input Power	Capacity	Input Power	Capacity	Input Power
-15	8650	3100	8300	3250	7950	3450	7600	3650	7150	3750	6700	3850
-7	9350	2950	9000	3200	8850	3500	8700	3800	8300	3850	7900	3900
2	9310	2390	9000	2550	9000	2820	9000	3090	8900	3530	8800	3980
7	9000	1580	9000	1900	9000	2200	9000	2500	9000	2800	9000	3100
25	9000	1090	9000	1280	8730	1480	8460	1680	8280	1860	8100	2040

WH-MDF12C6E5

Water Out	30		35		40		45		50		55	
Outdoor Air	Capacity	Input Power	Capacity	Input Power	Capacity	Input Power	Capacity	Input Power	Capacity	Input Power	Capacity	Input Power
-15	9300	3500	8900	3660	8500	3830	8100	3990	7500	4090	7000	4200
-7	10400	3410	10000	3700	9600	3900	9200	4100	8700	4200	8200	4310
2	11800	3140	11400	3340	11000	3570	10600	3780	9800	3980	9100	4180
7	12000	2140	12000	2570	12000	3000	12000	3430	12000	3820	12000	4200
25	12000	1420	12000	1700	11800	1980	11700	2270	11500	2530	11400	2780

WH-MDF14C6E5

Water Out	30		35		40		45		50		55	
Outdoor Air	Capacity	Input Power	Capacity	Input Power	Capacity	Input Power	Capacity	Input Power	Capacity	Input Power	Capacity	Input Power
-15	9900	3910	9500	4050	9000	4190	8600	4330	7900	4450	7300	4560
-7	11100	3730	10700	4000	10200	4200	9800	4400	9100	4570	8500	4740
2	12900	3510	12400	3730	11900	3950	11400	4170	10400	4290	9500	4400
7	14000	2600	14000	3110	14000	3630	14000	4140	13600	4610	13300	5080
25	14000	1750	14000	2100	14000	2450	14000	2800	14000	3050	14000	3440

WH-MDF16C6E5

Water Out	30		35		40		45		50		55	
Outdoor Air	Capacity	Input Power	Capacity	Input Power	Capacity	Input Power	Capacity	Input Power	Capacity	Input Power	Capacity	Input Power
-15	10600	4130	10300	4420	10000	4710	9700	5000	8800	4980	7900	4950
-7	11900	4070	11400	4300	10800	4500	10300	4700	9600	4850	9000	4990
2	13500	3780	13000	4000	12400	4220	11900	4440	10800	4500	9800	4550
7	16000	3250	16000	3780	16000	4310	16000	4840	15200	5150	14500	5450
25	16000	2350	16000	2730	16000	3110	16000	3490	16000	3710	15900	3930

HYDRAULIC PUMP PERFORMANCE

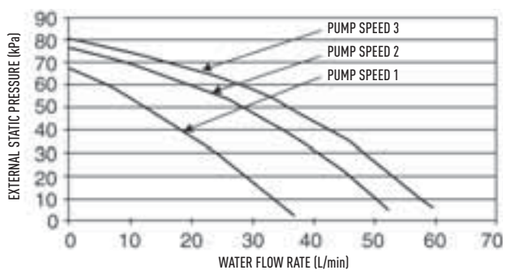

This data is measured by Panasonic in accordance with EN14511-2 standard.
This data is for reference purpose only, and does not guarantee the performance.
HC: Heating Capacity (kW)
IP: Power Input (kW)
LWC: Leaving Water Condenser Temperature (°C)
Tamb: Ambient Temperature (°C)

WH-MDF09C3E8

Water Out	30		35		40		45		50		55	
Outdoor Air	Capacity	Input Power	Capacity	Input Power	Capacity	Input Power	Capacity	Input Power	Capacity	Input Power	Capacity	Input Power
-15	8650	3100	8300	3250	7950	3450	7600	3650	7150	3750	6700	3850
-7	9350	2950	9000	3200	8850	3500	8700	3800	8300	3850	7900	3900
2	9310	2390	9000	2550	9000	2820	9000	3090	8900	3530	8800	3980
7	9000	1580	9000	1900	9000	2200	9000	2500	9000	2800	9000	3100
25	9000	1090	9000	1280	8730	1480	8460	1680	8280	1860	8100	2040

WH-MDF12C9E8

Water Out	30		35		40		45		50		55	
Outdoor Air	Capacity	Input Power	Capacity	Input Power	Capacity	Input Power	Capacity	Input Power	Capacity	Input Power	Capacity	Input Power
-15	9300	3500	8900	3660	8500	3830	8100	3990	7500	4090	7000	4200
-7	10400	3410	10000	3700	9600	3900	9200	4100	8700	4200	8200	4310
2	11800	3140	11400	3340	11000	3570	10600	3780	9800	3980	9100	4180
7	12000	2140	12000	2570	12000	3000	12000	3430	12000	3820	12000	4200
25	12000	1420	12000	1700	11800	1980	11700	2270	11500	2530	11400	2780

WH-MDF14C9E8

Water Out	30		35		40		45		50		55	
Outdoor Air	Capacity	Input Power	Capacity	Input Power	Capacity	Input Power	Capacity	Input Power	Capacity	Input Power	Capacity	Input Power
-15	9900	3910	9500	4050	9000	4190	8600	4330	7900	4450	7300	4560
-7	11100	3730	10700	4000	10200	4200	9800	4400	9100	4570	8500	4740
2	12900	3510	12400	3730	11900	3950	11400	4170	10400	4290	9500	4400
7	14000	2600	14000	3110	14000	3630	14000	4140	13600	4610	13300	5080
25	14000	1750	14000	2100	14000	2450	14000	2800	14000	3050	14000	3440

WH-MDF16C9E8

Water Out	30		35		40		45		50		55	
Outdoor Air	Capacity	Input Power	Capacity	Input Power	Capacity	Input Power	Capacity	Input Power	Capacity	Input Power	Capacity	Input Power
-15	10600	4130	10300	4420	10000	4710	9700	5000	8800	4980	7900	4950
-7	11900	4070	11400	4300	10800	4500	10300	4700	9600	4850	9000	4990
2	13500	3780	13000	4000	12400	4220	11900	4440	10800	4500	9800	4550
7	16000	3250	16000	3780	16000	4310	16000	4840	15200	5150	14500	5450
25	16000	2350	16000	2730	16000	3110	16000	3490	16000	3710	15900	3930

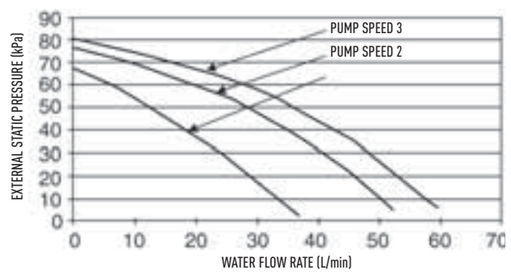

This data is measured by Panasonic in accordance with EN14511-2 standard.
This data is for reference purpose only, and does not guarantee the performance.
HC: Heating Capacity (kW)
IP: Power Input (kW)
LWC: Leaving Water Condenser Temperature (°C)
Tamb: Ambient Temperature (°C)

ACCESSORIES

PANASONIC ACCESSORIES

SOLAR KIT ACCESSORIES	
CZ-NS1P	Solar connection PCB (for Bi-split type)
CZ-NS2P	Solar connection PCB (for Mono-bloc type)
SANITARY TANK ACCESSORIES	
CZ-TK1	Temperature sensor kit for third party tank
DEICE ACCESSORIES	
CZ-NE1P	Base pan heater kit

FIELD PROCURED OPTIONAL PARTS

SOLAR KIT		
Brand	**Model No.**	**Feature**
RESOL	FlowConS_DeltaSol_BS_Plus	Remote Control
Oventrop	Regusol X-25	Remote Control
3 WAY-VALVE		
Brand	**Model No.**	**Feature**
Siemens	CZV322 3 Port	Spring return
2 WAY VALVE		
Brand	**Model No.**	**Feature**
Honeywell	V4043C1007	Spring return
Siemens	CZV222 2 Port	Spring return
ROOM THERMOSTAT ON / OFF		
Brand	**Model No.**	**Feature**
Siemens	RAA20	Dial type
Siemens	REV200	Programme
THERMAL VALVE		
Brand	**Model No.**	**Feature**
Taconova	RA57	NC
Danfoss	AVB-NC	NC

RESOL
FlowConS_DeltaSol_BS_Plus

Oventrop
REGSOL UNO X-15

Siemens
CZV322 3 Port

Siemens
CZV222 2 Port

Siemens
RAA20

Siemens
REV200

Taconova
RA57

Danfoss
AVB-NC

THE OPERATION LED BLINKS AND AN ERROR CODE APPEARS ON THE CONTROL PANEL DISPLAY.

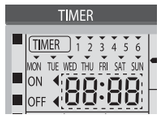

- Turn the unit off and inform the authorised dealer of the error code.
- The timer operation is cancelled when an error code occurs.

FORCE HEATER MODE BUTTON

- The backup heater also serves as backup in case of malfunctioning of the outdoor unit.
- Press OFF / ON to stop the force heater operation.
- During Force Heater mode, all other operations are not allowed.

ERROR CODES TABLE

Diagnosis display	Abnormality / Protection control	Abnormality Judgement	Primary location to verify
H00	No abnormality detected	—	—
H12	Indoor/Outdoor capacity unmatched	90s after power supply	· Indoor/outdoor connection wire · Indoor/outdoor PCB · Specification and combination table in catalogue
H15	Outdoor compressor temperature sensor abnormality	Continue for 5 sec.	· Compressor temperature sensor (defective or disconnected)
H23	Indoor refrigerant liquid temperature sensor abnormality	Continue for 5 sec.	· Refrigerant liquid temperature sensor (defective or disconnected)
H38	Indoor/Outdoor mismatch	—	· Indoor/Outdoor PCB
H42	Compressor low pressure abnormality	—	· Outdoor pipe temperature sensor · Clogged expansion valve or strainer · Insufficient refrigerant · Outdoor PCB · Compressor
H62	Water flow switch abnormality	Continue for 1 min.	· Water flow switch
H64	Refrigerant high pressure abnormality	Continue for 5 sec.	· Outdoor high pressure sensor (defective or disconnected)
H70	Back-up heater OLP abnormality	Continue for 60 sec.	· Back-up heater OLP (Disconnection or activated)
H72	Tank sensor abnormal	Continue for 5 sec.	· Tank sensor
H76	Indoor - control panel communication abnormality	—	· Indoor - control panel (defective or disconnected)
H90	Indoor / outdoor abnormal communication	> 1 min after starting operation	· Internal / external cable connections · Indoor / Outdoor PCB
H91	Tank heater OLP abnormality	Continue for 60 sec.	· Tank heater OLP (Disconnection or activated)
H95	Indoor/Outdoor wrong connection	—	· Indoor/Outdoor supply voltage
H98	Outdoor high pressure overload protection	—	· Outdoor high pressure sensor · Water pump or water leakage · Clogged expansion valve or strainer · Excess refrigerant · Outdoor PCB
H99	Indoor heat exchanger freeze prevention	—	· Indoor heat exchanger · Refrigerant shortage
F12	Pressure switch activate	4 times occurrence within 20 minutes	· Pressure switch
F14	Outdoor compressor abnormal revolution	4 times occurrence within 20 minutes	· Outdoor compressor
F15	Outdoor fan motor lock abnormality	2 times occurrence within 30 minutes	· Outdoor PCB · Outdoor fan motor
F16	Total running current protection	3 times occurrence within 20 minutes	· Excess refrigerant · Outdoor PCB
F20	Outdoor compressor overheating protection	4 times occurrence within 30 minutes	· Compressor tank temperature sensor · Clogged expansion valve or strainer · Insufficient refrigerant · Outdoor PCB · Compressor
F22	IPM (power transistor) overheating protection	3 times occurrence within 30 minutes	· Improper heat exchange · IPM (Power transistor)
F23	Outdoor Direct Current (DC) peak detection	7 times occurrence continuously	· Outdoor PCB · Compressor
F24	Refrigeration cycle abnormality	2 times occurrence within 20 minutes	· Insufficient refrigerant · Outdoor PCB · Compressor low compression
F25	Cooling / Heating cycle changeover abnormality	4 times occurrence within 30 minutes	· 4-way valve · V-coil
F27	Pressure switch abnormality	Continue for 1 min.	· Pressure switch
F36	Outdoor air temperature sensor abnormality	Continue for 5 sec.	· Outdoor air temperature sensor (defective or disconnected)
F37	Indoor water inlet temperature sensor abnormality	Continue for 5 sec.	· Water inlet temperature sensor (defective or disconnected)
F40	Outdoor discharge pipe temperature sensor abnormality	Continue for 5 sec.	· Outdoor discharge pipe temperature sensor (defective or disconnected)
F41	PFC control	4 times occurrence within 10 minutes	· Voltage at PFC
F42	Outdoor heat exchanger temperature sensor abnormality	Continue for 5 sec.	· Outdoor heat exchanger temperature sensor (defective or disconnected)
F43	Outdoor defrost sensor abnormality	Continue for 5 sec.	· Outdoor defrost sensor (defective or disconnected)
F45	Indoor water outlet temperature sensor abnormality	Continue for 5 sec.	· Water outlet temperature sensor (defective or disconnected)
F46	Outdoor Current Transformer open circuit	—	· Insufficient refrigerant · Outdoor PCB · Compressor low
F95	Cooling high pressure overload protection	—	· Outdoor high pressure sensor · Water pump or water leakage · Clogged expansion valve or strainer · Excess refrigerant · Outdoor PCB

ETHEREA

designed to care for you

ECONAVI

dual sensor

WELCOME TO NEW DOMESTIC RANGE

More than ever before, Panasonic has developed a range of products designed for you and your clients.

The main new feature in the Domestic line is, without doubt, the Etherea range with the new ECONAVI system, which detect the level of human presence in a room and their level of activity and adjusts output accordingly. With its innovative design, high efficiency and incomparable purification system, the range has been designed with your clients in mind. Above all, it is also a range for air conditioning professionals, such as yourself, thanks to its broad range of products which are capable of conditioning rooms of all sizes – always with optimal efficiency and incomparable ease of installation. The Etherea range guarantees that you are offering your clients the very best.

THE NEW ETHEREA RANGE PURE EFFICIENCY WITH ECONAVI

Panasonic's new Etherea units offer maximum efficiency in every sense. They ensure minimum consumption, thanks to the new ECONAVI system, which intuits the level of human presence in a room and their level of activity and adjusts output accordingly. This feature provides up to 40% energy savings on heating mode, and up to 30% energy savings on cooling mode.

Our super silent air conditioners guarantee the purest air to take care of you and your family. They boast sophisticated features, such as the E-ion plus purification system, designed to eliminate harmful micro-organisms, viruses, bacteria and moulds and a system which prevents humidity in the room from dropping too far. Thanks to Mild Dry System.

ECONOMICAL, ENVIRONMENT-FRIENDLY OPERATION HIGH COP (COEFFICIENCY OF PERFORMANCE)

Original Panasonic Inverter technology and a high-performance compressor provide top-class operating efficiency. This lets you enjoy lower electricity bills while contributing to environmental protection.

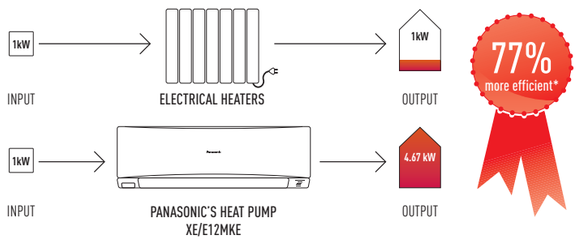

*On heating mode, XE/E12MKE compared with electrical heaters at +7°C

healthyair

quality air control 24 h — PATROL SENSOR
The Patrol Sensor is on guard 24 hours a day to ensure optimal air quality.

pure air system — e-ION PLUS
The E-ion+ system eliminates 99% of bacteria, viruses and mildew from the air.

perfect humidity control — MILD DRY
The Perfect Humidity Air controls the humidity level in the air to prevent over-dryness.

energysaving

A class energy saving — INVERTER +
The A Inverter system provides energy savings of up to 50%. You win and nature wins.

30% savings — ECONAVI
ECONAVI sensor determine the human activity level adjust the air flow orientation for maximum comfort and maximum savings.

improved comfort — AUTOCOMFORT
The Autocomfort system detects conditions in the room and switches to energy saving operation when nobody is on the room.

silent air 20 dB — SUPER QUIET
With Super Quiet technology our devices are as quiet as a library.

ECONAVI

NEW ECONAVI SYSTEM

ECO INTELLIGENCE BY DESIGN

NEW 2011

Going green and saving energy shouldn't compromise on your comfortable lifestyle. That is why the inverter – with its exceptional energy-saving performances – has been introduced to our air conditioners.

At the same time, individuals also get to enjoy the Advanced+Plus e-ion Air Purifying System with the Patrol Sensor for cleaner air. Both advanced features have been designed to improve quality of life. With the same concerns in mind, Panasonic is introducing a new Econavi concept – an intelligent eco function with automatic detection which further reduces energy waste.
This enables individuals to save energy easily and thus improve the environment. Imagine what millions of people around the world can change with Econavi. A more sustainable future is possible.

INTRODUCING ECONAVI – A SYSTEM WHICH SAVES ENERGY BY REDUCING WASTE

The ECONAVI concept applies high precision Human Sensor and Control Program technologies to optimise air conditioner operation according to room conditions. How does it save energy? By using technology to detect areas in which energy is normally wasted and self-adjusting cooling power. Thus, it helps you to save energy efficiently with uninterrupted cooling, comfort and convenience.

UP TO 30% ENERGY SAVINGS ON COOLING MODE*, 40% ENERGY SAVINGS ON HEATING MODE**

30% savings ECONAVI

Accumulative energy consumption is saved up to 40% during stable operation for 1 hour.

***Energy saving effect for cooling by ECONAVI dual sensor: 30%**

Test condition

Comparison of 1.5HP Inverter model between with ECONAVI dual sensor ON and OFF ECONAVI dual sensor ON Outside temperature: 35˚C/24˚C Remote setting temperature: 25˚C with Fan Speed (High) /Vertical Airflow direction: Auto, Horizontal Airflow direction: ECONAVI Mode Setting temperature goes up 1˚C controlled by ECONAVI activity level ECONAVI dual sensor OFF Outside temperature :35˚C/24˚C Remote setting temperature:25˚C with Fan Speed (High) / Vertical Airflow direction: Auto, Horizontal Airflow direction: Front Total power consumption amount are measured for 1 hour in stable condition. At Panasonic Amenity Room (size:16.2M2) This is the maximum energy saving value, and the effect differs according to conditions in installation and usage.

****Energy saving effect for heating by ECONAVI dual sensor: 40%**

Test condition

Comparison of 1.5HP Inverter model between with ECONAVI dual sensor ON and OFF ECONAVI dual sensor ON Outside temperature: 7˚C/6˚C Remote setting temperature: 23˚C with Fan Speed (High) /Vertical Airflow direction: Auto, Horizontal Airflow direction: ECONAVI Mode Setting temperature goes down 2˚C controlled by ECONAVI activity level ECONAVI dual sensor OFF Outside temperature: 7˚C/6˚C Remote setting temperature: 23˚C with Fan Speed (High) / Vertical Airflow direction: Auto, Horizontal Airflow direction: Front Total power consumption amount are measured for 1 hour in stable condition. At Panasonic Amenity Room (size:16.2M2) This is the maximum energy saving value, and the effect differs according to conditions in installation and usage.

One-touch ECONAVI reduces waste in three simple steps:

It examines
- Levels of activity
- Human presence

It assesses
- Changes in human location
- Changes in human activity
- Changes in human presence

and executes
- Adjusts airflow direction
- High activity: automatic adjustment of the set temperature
- Absence: saves energy

- Adjusts airflow direction

- High activity: automatic adjustment of the set temperature

- Absence: save energy

SENSOR DETECTION PRINCIPLE

Dual human activity sensor detects human activity level and directs airflow to occupied or high activity zone.

LEDs Operation Indication Status

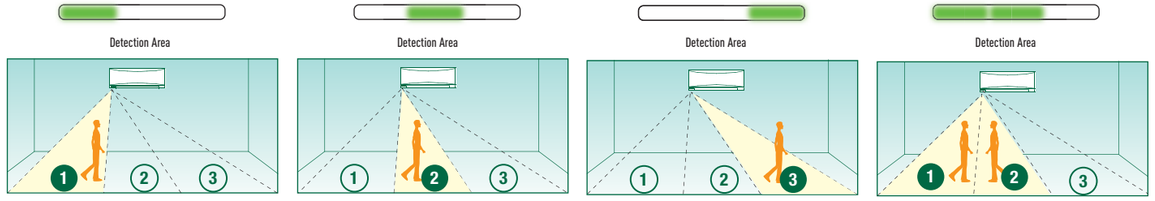

COVERAGE CAPABILITIES

ECONAVI dual sensor covers a wider area due to its improved area detection function.

The entire room is divided into 3 detection areas

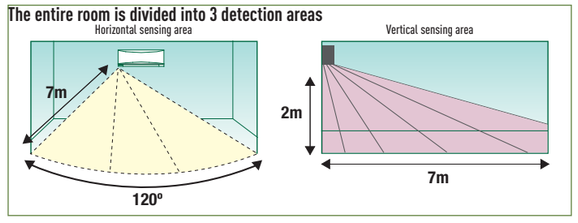

DIFFERENTIATING OBJECTS

ECONAVI's sensor technology uses factors such as speed, frequency and temperature of every object to determine if it is human.

Electrical products

Difference in temperatures ☑
+
Movement ☒
Concludes it is not human

Small insects

Difference in temperatures ☑
+
Movement ☑
Concludes it is not human

Both changes may be detected, but they are too small to have any effect on the sensor.

A rolling ball

Difference in temperatures ☒
+
Movement ☑
Concludes it is not human

Pets

Difference in temperatures ☑
+
Movement ☑
Concludes it is not human

From the difference in temperatures and the nature of the object's movement, ECONAVI can determine if it's human*.

*The sensor may deem pets as humans, unless it moves within the detection zone at speeds that are not humanly possible.

HIGH-PRECISION SENSING

All objects emit infrared rays which, although invisible, can be detected as heat by ECONAVI's sensor if it is within the detection zone. When an object moves within its detection zone, ECONAVI compares the object's temperature with the room temperature to determine if it is human, and level of activity based on its movement.

The entire room is divided into 3 detection areas

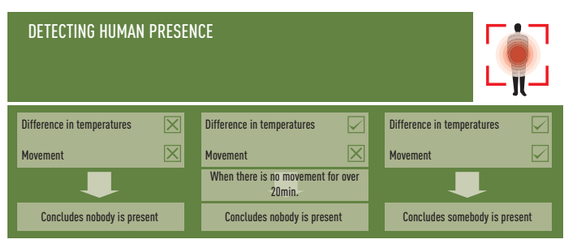

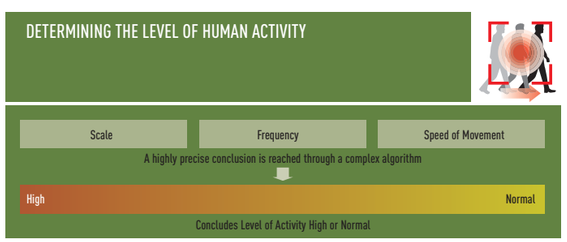

ADVANCED+PLUS. E-ION AIR PURIFYING SYSTEM WITH PATROL SENSOR

Panasonic's original, highly acclaimed e-ion Air Purifying System is now 15%[1] more efficient than before. Active e-ions are released to catch dust particles and bring them back to the large filter. Thanks to this revolutionary boomerang-like mechanism, air is purified throughout the room to provide a healthy, relaxing living environment.

healthyair

30% savings ecoday | perfect humidity control MILD DRY | pure air system e-ION PLUS

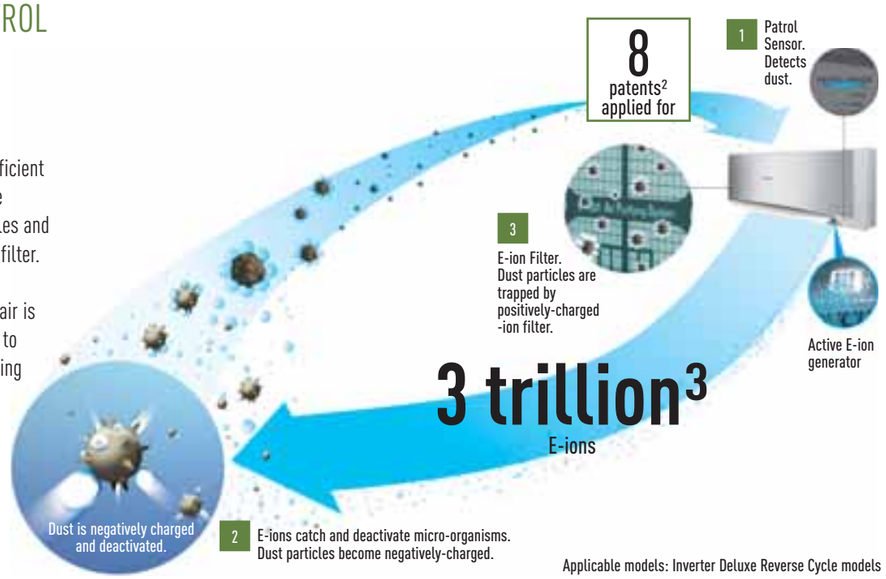

Applicable models: Inverter Deluxe Reverse Cycle models

1. Compared to 2007 year's models.
2. Panasonic has applied for 8 patents related to e-ion Air Purifying technology. (As of May, 2010)
3. 3 trillion is the simulated number of active e-ions under the mentioned conditions. Actual measured active e-ions at the centre of the room (13 m³):100k/cc Calculated number of active e-ions in the entire room assuming they are evenly distributed.

This is Panasonic's revolutionary mechanism

Air is monitored both during air conditioner operation and when it's switched off. When dirt is detected, the air purifying function is started to immediately clean the air in the room.

1

2

3

DETECTS

Patrol Sensor

The sensor measures the dirt in the air, and above a certain level the air is judged to be dirty.
If dirt concentration exceeds the sensing level, the Air Purifying System is switched on.

CATCHES & INACTIVATES

E-Ion Action

Three trillion e-ions are released to catch floating dust particles. The ions also deactivate bacteria and viruses.

CAPTURES ELECTRICALLY

E-Ion filter

The filter is positively-charged, so negatively-charged dust particles are electrically attracted. This electrical action assures that dust is efficiently captured.

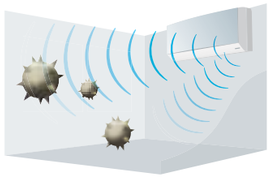

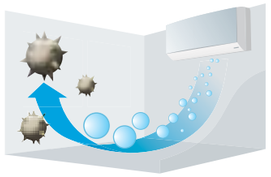

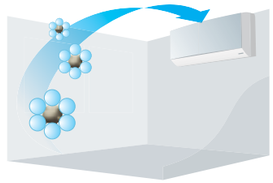

Active E-ion

- Active e-ions can deactivate bacteria and virus activities.
- E-ions Air Purifying System can rapidly reduce airborne mould and bacteria[1)]

Deactivation was certified by Japan Food Research Laboratories
- Test report number: No. 10057764001-02
  Bacteria: Staphylococcus aureus subsp. aureus (NBRC12732)
- Test report number: No. 10057770001-02
  Bacteria: Escherichia coli (NBRC3972)
- Test report number: No. 204101750-001
  Virus: Influenza virus A
- Test report number: No. 304110078-001

1) Test method: The e-ion Air Purifying System was operated in a test room (10m³) and changes in airborne mould and bacteria were measured by means of the Air Sampler Method (MAS100)

DEACTIVATING MECHANISM

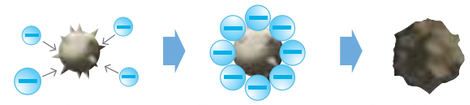

Active e-ions stick to the surface of the bacteria.
The same applies to viruses

OH radicals work on the cell wall.

The bacteria is deactivated.

Target substances: Bacteria, Viruses

REMOVAL PERFORMANCE

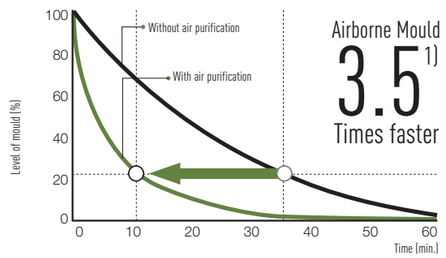

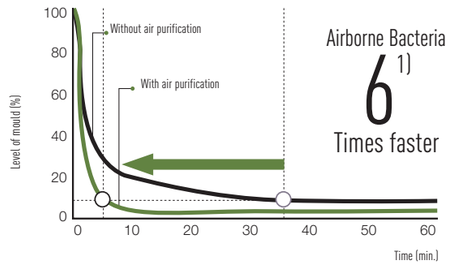

E-ion Filter

Using the force of attraction between positive and negative charges, the e-ion Filter – which is 7 times bigger and finer than ever – powerfully captures airborne dust particles.

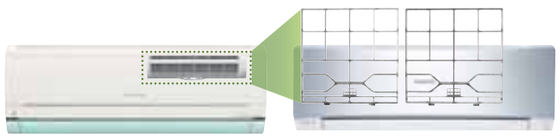

Also captures microscopic dust (100~1,000μm)

Bigger size, finer mesh

The filter covers the entire grille area.

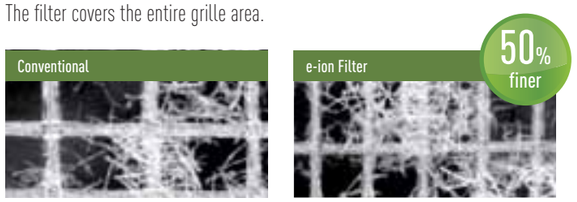

Electric charging

Electric Induction Fibres extend across the entire area of the filter for charging.

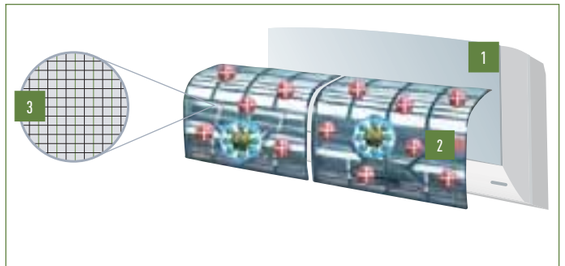

1. Active e-ion Power Module
2. Positive Charging Electric Wire
3. Electric Induction Fibres positively charge the entire filter

Electric dust collection for more efficient purification

A smoke collection test demonstrates the exceptional purifying performance.

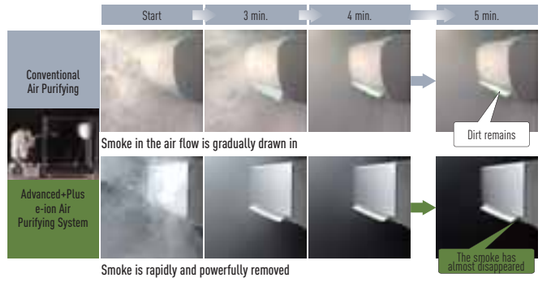

Comparison with Conventional Filter

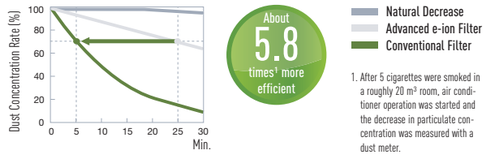

1. After 5 cigarettes were smoked in a roughly 20 m³ room, air conditioner operation was started and the decrease in particulate concentration was measured with a dust meter.

Comparison with Conventional e-ion Air Purifying System

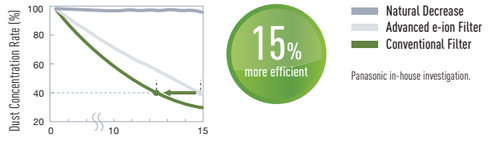

Panasonic in-house investigation.

INVERTER

OUTSTANDING ENERGY-SAVING PERFORMANCE

You will always be comfortable with an Inverter air conditioner. After reaching the set temperature quickly, the power will be adjusted smoothly to keep the temperature constant. So, there will be no sharp temperature changes and you will save power. The ample range of output powers also guarantees a pleasant temperature at all times, even when the number of people in the room fluctuates. This way, Inverter air conditioners provide more precise temperature control than non-Inverter models.

The advantages of inverter air conditioners.
comparing Inverter and non-Inverter air conditioners.

eco ideas

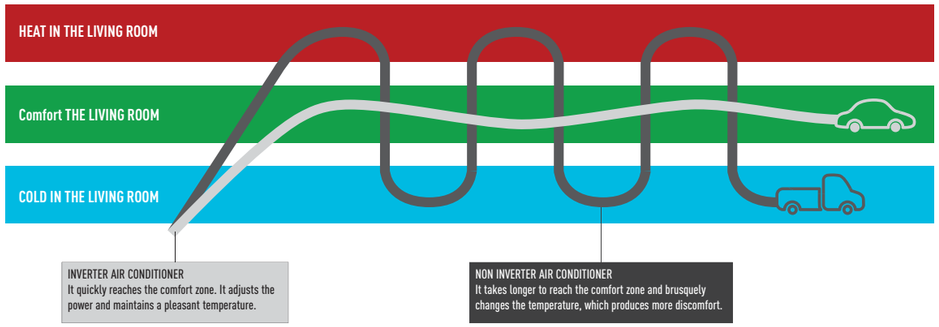

64% Cut in power consumption on heating mode for big savings*

Panasonic Inverter air conditioners provide exceptional energy-saving performance that ranks among the highest in the industry. This dramatically cuts electricity consumption and CO2 emissions, allowing an environment-friendly operation.

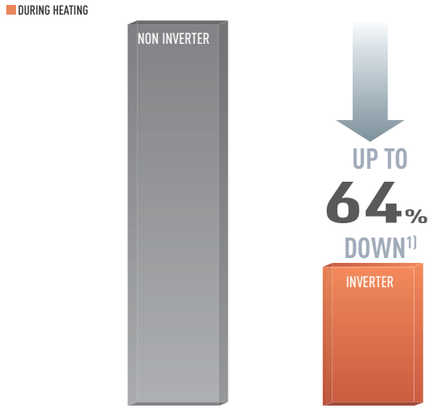

Energy saving effect by Inverter (Heating): 64%
Test condition
Comparison of Inverter model and Non-Inverter model (Heating)
Outside temperature:2˚C/1˚C Remote setting temperature: 25˚C with Fan speed (High) /Vertical Airflow direction: Auto, Horizontal Airflow direction: Front Total consumption amount are measured from the start of operation until it reaches to the set temperature. At Panasonic Amenity Room (size:16.2M2) This is the maximum energy saving value, and the effect differs according to conditions in installation and usage.

1)Comparison of cumulative electricity consumption during heating to reach the setting temperature (Panasonic in-house comparison)
Test conditions: Indoor and outdoor temperature: 7ºC/ Setting temperature: 25ºC/ Fan speed: High.

Outstanding performance with up to 50% energy savings on cooling mode

The exceptional energy-saving performance of Panasonic Intelligent Inverter air conditioners ranks among the highest in the industry.
The secret lies in its precision control. After reaching the set temperature, an Intelligent Inverter air conditioner continually adjusts compressor rotation speed to operate with minimum power – giving you up to 50% energy savings during cooling operation. By contrast, a non-Inverter unit operates on an ON-OFF cycle to maintain the temperature –so it uses twice as much electricity.

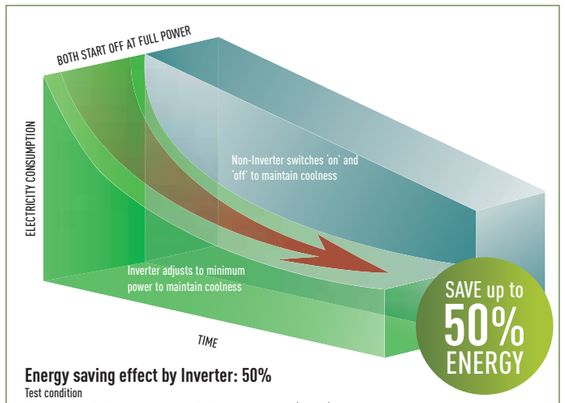

Energy saving effect by Inverter: 50%
Test condition
Comparison of 1.5 HP Inverter model and 1.5 HP Non-Inverter model (Cooling).
Outside temperature: 35˚C/24˚C Remote setting temperature: 25˚C with Fan speed (AUTO) / Vertical Airflow direction: Auto, Horizontal Airflow direction: Front total power consumption amount are measured for 8 hours from starting. At Panasonic Amenity Room (size:16.2M2) This is the maximum energy saving value, and the effect differs according to conditions in installation and usage.

How can an Inverter save energy?

The Inverter constantly adjusts compressor rotation speed to provide optimum performance at all times. This extremely precise operation enables quick cooling while reducing power consumption compared to conventional non-Inverter units.

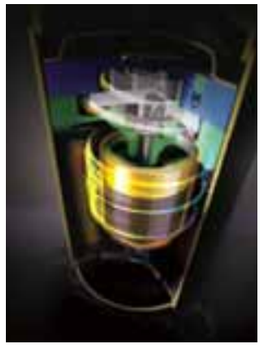

A: The most efficient

Our new models have obtained the highest energy performance classification, Class A, which puts them in the highest energy saving class. This means you can use these models every day, without having to worry about the electric bill.

Energy efficiency classifications

A European Community directive requiring energy labelling of domestic appliances came into effect in 2005. Since then, all manufacturers have been required to label each product with an efficiency level represented by a letter from A to G. This means that a class B domestic appliance consumes approximately 10% more than an A, a C 20% more than an A, etc.
As well as the corresponding letter, further information on each domestic appliance appears on the right-hand part of the sticker.
In the tables which appear alongside the product in this catalogue, the energy efficiency is referenced with the corresponding letter in white on a black arrow.

Classifications

There are seven energy efficiency classifications, from A to G.
The highest efficiency level is A and the lowest is G.

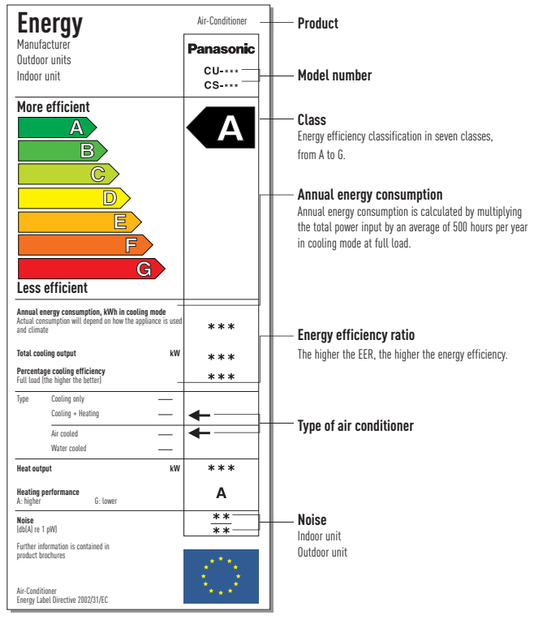

Unit energy efficiency class in cooling mode

A	3.20 < EER
B	3.20 ≥ EER > 3.00
C	3.00 ≥ EER > 2.80
D	2.80 ≥ EER > 2.60
E	2.60 ≥ EER > 2.40
F	2.40 ≥ EER > 2.20
G	2.20 ≥ EER

Unit energy efficiency class in heating mode

A	3.60 < COP
B	3.60 ≥ COP > 3.40
C	3.40 ≥ COP > 3.20
D	3.20 ≥ COP > 2.80
E	2.80 ≥ COP > 2.60
F	2.60 ≥ COP > 2.40
G	2.40 ≥ COP

These classifications are for split and multi split air conditioning units.

PANASONIC TECHNOLOGY FOR COMFORT

Extremely quiet. We have succeeded in making one of the most silent air conditioners on the market.
The indoor unit runs silently with a slow fan speed. When you press the Quiet Mode button on the remote control, the operating sound level reduces even further, down to 20 dB. At 20 dB technology our devices are as quiet as a library!
We produce discreet air conditioners which do not disturb you, even when the room is at its quietest.

silent
air
20 dB
SUPER QUIET

INVERTER

Further INVERTER advantages

- Panasonic's Inverter air conditioners control room temperature much better than models which work at a constant speed.
- An Inverter air conditioner has 64% greater heating capacity than models which work at a constant speed. They provide more than enough power to heat a room in winter [1].
- Inverter models distribute the warm air over a wider area than electric radiators. They do not pollute the room like paraffin heaters do. There is no fire risk as there is with gas heaters. Air conditioners transfer heat to the room air, so they are safe and practical.
- Tests have shown that a Panasonic Inverter air conditioner consumes half the electricity of non-Inverter models [2].

1) Comparison of cumulative electricity consumption during heating to reach the setting temperature (Panasonic in-house comparison) Test conditions: Indoor and outdoor temperature: 7ºC/ Setting temperature: 25ºC/ Fan speed: High.
2) Comparison of cumulative electricity consumption during 8 hours of cooling (Panasonic in-house comparison) Test conditions: Room temperature at start: 35ºC/ Setting temperature: 25ºC.

Quick comfort

as soon as an Inverter air conditioner is switched on, it provides the exact amount of power needed to rapidly cool or heat the room. This enables it to reach the set
temperature in about a quarter of the time required by non-Inverter models.
So you're comfortable soon after you arrive home on a hot summer day, or on a cold winter morning.

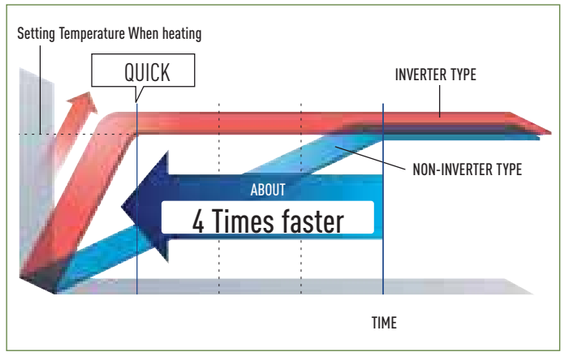

Powerful Airflow with a Larger Cross Flow Fan

Panasonic's new models feature a large cross flow fan with improved design.The fan's larger diameter dramatically increases airflow. A powerful breeze rapidly cools the room to a comfortable temperature. And because the breeze reaches a wider area, the temperature is evenly distributed throughout the room, providing extra comfort.

*Compare with HKE.
For MKE series Inverter models except multi type.

More Precise Temperature Control

An Inverter varies output power to enable more precise temperature adjustment. In comparison, a non-Inverter air conditioner controls the temperature by switching on and off. This results in temperature fluctuations, leading to uneven cooling. With an Inverter model, you're assured a uniform room temperature for extra comfort.

Cooling power adjusts to meet changes in room temperature

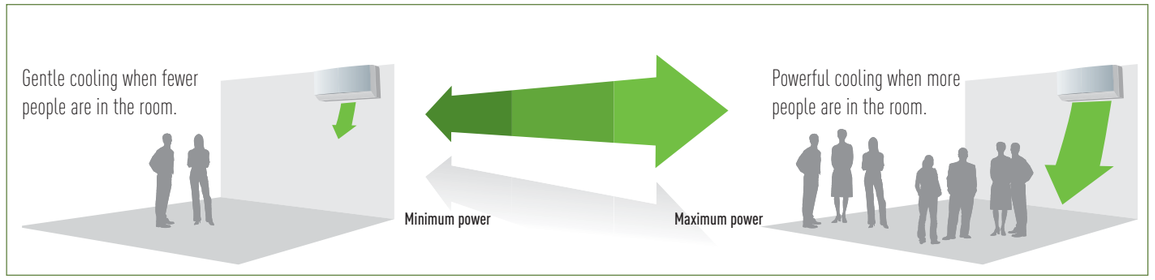

THE SECRET OF SAVING ENERGY. DIFFERENT RANGES THAT MEET ALL TYPES OF REQUIREMENTS

Panasonic makes the widest power range on the market. In order to meet the requirements of each and every client, this line of models makes it possible to adjust consumption to match the characteristics of every room by choosing the ideal power range. No comfort is sacrificed and power consumption is not exceeded.

SAVE UP TO 15%

Panasonic's exclusive 4.5 kW models (E15, XE15, RE15) thus provide the answer to a large number of situations in which more power is required than that offered by the 3.5 kW models, but for which the 5 kW units are too powerful. Furthermore, using a 4.5 kW instead of a 5 kW unit, you will save money due to the greater efficiency of the E15 and you will win on design because the E15 is the same size as the E12, and is 18% smaller than the 5 kW. Using the E15 range, everybody is a winner, and your customer pays for exactly what he needs!
Using our E15, you can save up to 15% compared with an E18 and still obtain a perfect temperature setting in a 30 m² room.*

SAVE UP TO 14%

In the same way, Panasonic's exclusive 2.2 kW models (E7, XE7) guarantee maximum comfort at a minimum price and functioning cost – for small surface areas where the minimum standards of all the other 2.8 kW models exceed real air conditioning requirements.
Using an E7, you can save up to 14% compared with an E9 and still obtain a perfect temperature setting in an 11 m² room.*

SAVE UP TO 15%

Savings with correct dimensioning of air conditioning unit: case study for a 12 m² bedroom or on a living room of 33 m²*

MODEL	ANNUAL CONSUMPTION (KW)	SAVING	USING A E7 AND NOT A E9 ON A 12 M² ROOM
KIT-XE7-MKE	235	12,3%	Furthermore, with a E7, you are not only saving money but the E7 is quieter than the E9!
KIT-XE9-MKE	268		
MODEL	**ANNUAL CONSUMPTION (KW)**	**SAVING**	**USING A E15 AND NOT A E18 ON A 33 M² LIVING ROOM**
KIT-E15-MKE	630	14,3%	Furthermore, with a E15, you are not only saving money, but have smaller and discrete indoor units, and incredibly silent (only 25 dB!)
KIT-E18-MKE	735		

REDUCE CONSUMPTION BY UP TO 36%

Panasonic's multi split. Conditions more, consumes less

If air conditioning requirements exceed the ambit of a single room, Panasonic offers you a very extensive range of possibilities with up to 4 indoor units connected to a single outdoor unit. In this way, not only is the purchase price cheaper, the installation easier, the space for the outdoor units reduced and the elevation difference bigger, but consumption is also reduced enormously. This is because the consumption of one outdoor unit which powers four indoor units is much less than the sum of four outdoor units of individual splits.
You can reduce consumption by up to 36% using the multi-split as opposed to the 1x1!*

eco ideas

Annual consumption savings with multisplit: Using a multisplit system, you can save more!

ANNUAL CONSUMPTION (KW)		"SAVINGS USING MULTISPLIT INSTEAD OF MONOSPLIT"
7+12 in Multi	615	9.0% SAVING
7+12 in 1X1	687	
12+12 in Multi	760	15.9% SAVING
12+12 in 1X1	904	
7+7+12 in Multi	605	33.3% SAVING
7+7+12 in 1X1	922	
7+7+7+12 in Multi	825	8.0% SAVING
7+7+7+12 in 1X1	1,157.5	
7+9+9+12 in Multi	825	35.9% SAVING
7+9+9+12 in 1X1	1,233	

Furthermore, using a multisplit system, you are saving space on the outdoor unit, making easy installation in small places. The multi system also have long elevation difference and long tubing, which gives flexibility on the installation on the roof.

* Standard conditions: 2.5 m High ceiling; 1 person per 10 m²; 70 w lighting per 10 m²; 1.5 m² window per 10 m² oriented east or west; good thermal insulation on the walls.

DOMESTIC AIR CONDITIONER RANGE		COOLING POWER Rated kW (Min-Max)	EER	HEATING POWER Rated kW (Min-Max)	COP	NOISE PRESSURE LEVEL 1) dB* Cooling/Heating	DIMENSIONS MM 1) (H x W x D)
ETHEREA INVERTER+ // SILVER	KIT-XE7-MKE	2,05 (0,75-2,40)	4,36 A	2,80 (0,75-4,00)	4,41 A	20 / 20	290 x 870 x 204
	KIT-XE9-MKE	2,50 (0,85-3,00)	4,67 A	3,40 (0,85-5,00)	4,63 A	20 / 20	290 x 870 x 204
	KIT-XE12-MKE	3,50 (0,85-4,00)	4,07 A	4,00 (0,85-6,00)	4,21 A	20 / 20	290 x 870 x 204
	KIT-XE15-MKE	4,20 (0,85-5,00)	3,33 A	5,30 (0,85-6,80)	3,68 A	25 / 29	290 x 870 x 204
	KIT-XE18-MKE	5,00 (0,98-6,00)	3,40 A	5,80 (0,98-8,00)	3,77 A	34 / 34	290 x 1.070 x 235
	KIT-XE21-MKE	6,30 (0,98-7,10)	2,85 C	7,20 (0,98-8,50)	3,43 B	34 / 34	290 x 1.070 x 235
ETHEREA INVERTER+ // WHITE	KIT-E7-MKE	2,05 (0,75-2,40)	4,36 A	2,80 (0,75-4,00)	4,41 A	20 / 20	290 x 870 x 204
	KIT-E9-MKE	2,50 (0,85-3,00)	4,67 A	3,40 (0,85-5,00)	4,63 A	20 / 20	290 x 870 x 204
	KIT-E12-MKE	3,50 (0,85-4,00)	4,07 A	4,00 (0,85-6,00)	4,21 A	20 / 20	290 x 870 x 204
	KIT-E15-MKE	4,20 (0,85-5,00)	3,33 A	5,30 (0,85-6,80)	3,68 A	25 / 29	290 x 870 x 204
	KIT-E18-MKE	5,00 (0,98-6,00)	3,40 A	5,80 (0,90-8,00)	3,77 A	34 / 34	290 x 1.070 x 235
	KIT-E21-MKE	6,30 (0,98-7,10)	2,85 C	7,20 (0,98-8,50)	3,43 B	34 / 34	290 x 1.070 x 235
	KIT-E24-MKE	6,80 (0,98-8,10)	3,21 A	8,60 (0,98-9,90)	3,23 C	35 / 35	290 x 1.070 x 235
	KIT-E28-MKE	7,65 (0,98-8,60)	3,01 B	9,60 (0,98-11,00)	2,91 D	35 / 35	290 x 1.070 x 235
RE TYPE // STANDARD INVERTER	KIT-RE9-JKE-1	2,50 (0,90-3,00)	3,57 A	3,30 (0,90-4,10)	4,02 A	22 / 25	290 x 848 x 204
	KIT-RE12-JKE-1	3,50 (0,90-3,90)	3,47 A	4,25 (0,90-5,10)	3,79 A	22 / 25	290 x 848 x 204
	KIT-RE15-JKE-1	4,20 (1,00-4,60)	3,33 A	5,00 (0,90-6,80)	3,61 A	29 / 28	290 x 848 x 204
	KIT-RE18-JKE-1	5,00 (0,90-6,00)	3,40 A	5,80 (0,90-8,00)	3,77 A	37 / 37	290 x 1.070 x 235
	KIT-RE24-JKE-1	6,80 (0,90-8,10)	3,21 A	8,60 (0,90-9,90)	3,23 C	38 / 38	290 x 1.070 x 235
PW TYPE // STANDARD HEAT PUMP	KIT-PW9-GKE	2,65	3,21 A	2,85	3,63 A	31 / 31	250 x 770 x 205
	KIT-PW12-GKE	3,40	3,22 A	3,80	3,61 A	32 / 31	280 x 799 x 183
	KIT-PW18-GKE	5,10	2,91 C	5,30	3,35 C	38 / 38	275 x 998 x 230
	KIT-PW24-JKE	7,03	2,53 E	7,50	2,87 D	41 / 41	275 x 998 x 230
V TYPE // STANDARD COOLING ONLY	KIT-V7-DKE	2,40	3,24 A	-	-	24	280 x 799 x 183
	KIT-V9-DKE	3,00	3,21 A	-	-	24	280 x 799 x 183
	KIT-V12-DKE	3,68	3,23 A	-	-	27	280 x 799 x 183
	KIT-V18-DKE	5,30	3,25 A	-	-	35	275 x 998 x 230
	KIT-V24-DKE	7,03	2,70 D	-	-	38	275 x 998 x 230
	KIT-V28-EKE	7,91	3,22 A	-	-	42	340 x 1.150 x 260
FLOOR CONSOLE TYPE // INVERTER+	KIT-E9-GFEW-1	2,50 (0,80-3,00)	4,39 A	3,60 (0,80-5,00)	4,16 A	23 / 23	600 x 700 x 210
	KIT-E12-GFEW-1	3,50 (0,80-3,80)	3,63 A	4,80 (0,80-6,10)	3,64 A	24 / 23	600 x 700 x 210
	KIT-E18-GFEW-1	5,00 (0,90-5,60)	3,23 A	5,80 (0,90-7,10)	3,63 A	32 / 32	600 x 700 x 210
FLOOR OR CEILING // INVERTER	KIT-E15-DTE	4,15 (0,90-4,55)	3,22	5,17 (0,90-6,30)	3,34 C	34 / 30	540 x 1.028 x 200
	KIT-E18-DTE	5,00 (0,90-5,40)	3,01 B	6,10 (0,90-7,60)	3,35 C	36 / 32	540 x 1.028 x 200
	KIT-E21-DTE	5,80 (0,90-6,60)	3,01 B	6,80 (0,90-8,10)	3,42 B	38 / 34	540 x 1.028 x 200
ETHEREA MULTI SPLIT // INVERTER+ 2x1	KIT-2XE/E77-MBE	4,00 (1,50-5,00)	3,66 A	5,40 (1,10-7,00)	4,62 A	26 / 26	290 x 870 x 204 (x2)
	KIT-2XE/E79-MBE	4,50 (1,50-5,20)	3,66 A	5,40 (1,10-7,00)	4,62 A	26 / 26	290 x 870 x 204 (x2)
	KIT-2XE/E712-MBE	4,50 (1,50-5,20)	3,60 A	5,40 (1,10-7,00)	4,62 A	26 / 29	290 x 870 x 204 (x2)
	KIT-2XE/E99-MBE	4,80 (1,50-5,20)	3,66 A	5,40 (1,10-7,00)	4,62 A	26 / 26	290 x 870 x 204 (x2)
	KIT-2XE/E99-MKE	4,80 (1,50-5,20)	3,66 A	5,60 (1,10-7,20)	4,48 A	26 / 26	290 x 870 x 204 (x2)
	KIT-2XE/E912-MKE	5,00 (1,50-5,30)	3,36 A	5,60 (1,10-7,20)	4,55 A	26 / 29	290 x 870 x 204 (x2)
	KIT-2XE/E1212-MKE	5,20 (1,50-5,40)	3,42 A	5,60 (1,10-7,20)	4,63 A	29 / 29	290 x 870 x 204 (x2)
3x1	KIT-3XE/E7712-MBE	5,20 (1,90-7,20)	4,30 A	6,80 (1,40-8,30)	4,63 A	26 / 29 (E12)	290 x 870 x 204 (x3)
	KIT-3XE/E7715-MBE	5,20 (1,80- 7,30)	4,30 A	6,80 (1,60-8,30)	4,72 A	26 / 29 (E15)	290 x 870 x 204 (x3)
4x1	KIT-4XE/E77712-MBE	6,80 (1,90-8,80)	4,12 A	8,60 (3,00-10,60)	4,65 A	26 / 29 (E12)	290 x 870 x 204 (x4)
	KIT-4XE/E77715-MBE	6,80 (1,90-8,80)	4,12 A	8,60 (3,00-10,60)	4,65 A	26 / 29 (E15)	290 x 870 x 204 (x4)
	KIT-4XE/E77712-MKE	8,00 (2,80-8,90)	3,76 A	9,40 (3,40-10,50)	4,43 A	26 / 29 (E12)	290 x 870 x 204 (x4)
	KIT-4XE/E77715-MKE	8,00 (2,80-8,90)	3,76 A	9,40 (3,80-10,50)	4,50 A	26 / 29 (E12)	290 x 870 x 204 (x4)

FOR STANDARD ROOMS BETWEEN m² 2)

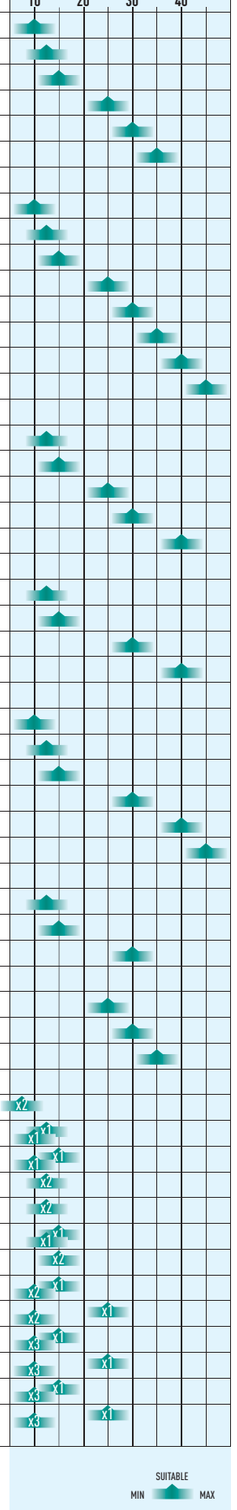

1) Indoor unit.
2) Standard conditions: 2.5 m high ceiling; 1 person per 10 m²; 70 w lighting per 10 m²; 1.5 m² window per 10 m² oriented east or west; good thermal insulation on the walls.

DOMESTIC AIR CONDITIONER RANGE

INDOOR UNITS	2.2 kW	2.8 kW	3.2 kW	4.5 kW	5.0 kW	6.0 kW	6.5 kW	8.0 kW
WALL MOUNTED ETHEREA // INVERTER+ // SILVER	KIT-XE7-MKE	KIT-XE9-MKE	KIT-XE12-MKE	KIT-XE15-MKE	KIT-XE18-MKE	KIT-XE21-MKE		
WALL MOUNTED ETHEREA // INVERTER+ // WHITE	KIT-E7-MKE	KIT-E9-MKE	KIT-E12-MKE	KIT-E15-MKE	KIT-E18-MKE	KIT-E21-MKE	KIT-E24-MKE	KIT-E28-MKE
WALL MOUNTED ETHEREA // INVERTER+ // SILVER // WHITE	KIT-XE7-MKE-3 / KIT-E7-MKE-3	KIT-XE9-MKE-3 / KIT-E9-MKE-3	KIT-XE12-MKE-3 / KIT-E12-MKE-3	KIT-XE15-MKE-3 / KIT-E15-MKE-3				
WALL MOUNTED // INVERTER+		KIT-RE9-JKE-1	KIT-RE12-JKE-1	KIT-RE15-JKE-1	KIT-RE18-JKE-1		KIT-RE24-JKE-1	
WALL MOUNTED TYPE // INVERTER+ // -15ºC		KIT-E9-HKEA	KIT-E12-HKEA	KIT-E15-HKEA	KIT-E18-HKEA	KIT-E21-HKEA		
WALL-MOUNTED TYPE // STANDARD HEAT PUMP		KIT-PW9-GKE	KIT-PW12-GKE		KIT-PW18-GKE		KIT-PW24-JKE	
WALL-MOUNTED TYPE // STANDARD COOLING ONLY	KIT-V7-DKE	KIT-V9-DKE	KIT-V12-DKE		KIT-V18-DKE		KIT-V24-DKE	KIT-V28-EKE
FLOOR CONSOLE TYPE // INVERTER+		KIT-E9-GFEW-1	KIT-E12-GFEW-1		KIT-E18-GFEW-1			
SINGLE SPLIT FLOOR OR CEILING TYPE // INVERTER				KIT-E15-DTE	KIT-E18-DTE	KIT-E21-DTE		
ETHEREA MULTI SPLIT 2X1 // INVERTER+					KIT-2XE/E99-MKE/ 2XE/E912-MKE / 2XE/E1212-MKE			
ETHEREA MULTI SPLIT 3X1 // INVERTER+						KIT-3XE/E7712-MKE / 3XE/E7715-MKE		
ETHEREA MULTI SPLIT 4X1 // INVERTER+								KIT-4XE/E77712-MKE / 4XE/E77715-MKE

FEATURE EXPLANATIONS

Healthy Air Quality

E-ION+ AIR PURIFYING SYSTEM
E-ions are shot out to catch dust and inactivate airborne bacteria and mould. The positively charged e-ion filter attracts dust to thoroughly clean the room.

NEWLY DESIGNED PATROL SENSOR
The patrol sensor monitors microscopic dirt in the air and air purifying starts as soon as it is detected. It continues operating 24-hr a day even when the air conditioner is switched OFF to maintain room air quality.

MILD DRY COOLING
Fine control helps prevent a rapid decrease in room humidity while maintaining the set temperature. Maintains an RH* up to 10% higher than cooling operation (*RH: Relative Humidity).
Ideal when sleeping with the air conditioner on.

SOFT BREEZE MODE
The Soft Breeze mode eliminates excess humidity with a soft breeze and gives you the feeling of well-being without significant temperature changes.

ION BENEFIT
Negative ions, found in the air near waterfalls and forests, generally produce a great sense of wellbeing. Panasonic brings all the benefits to your home, at the push of a button.

SUPER ALLERU-BUSTER FILTER
The super alleru-buster filter eliminates the allergens it captures. It combines three functions in one (anti-allergen, anti-virus and anti-bacteria) to keep room air clean and healthy.

ONE-TOUCH ANTI-MOULD AIR FILTER

ODOUR-REMOVING FUNCTION
Allows the exchanger to be cleaned, preventing possible odours. While this function is connected, the fan also remains off momentarily to avoid unpleasant odours while the exchanger is being cleaned.

REMOVABLE, WASHABLE PANEL
The front panel is easy to keep clean. It can be removed quickly in one single step and can be washed in water. A clean front panel ensures smoother, more efficient operation, which can save energy.

Comfort

INVERTER PLUS SYSTEM
Inverter plus products improve on the characteristics of standard Inverter air conditioners by over 20%. This means 20% less consumption and 20% off your electric bill. A Inverter plus is also A class on cooling and heating mode.

INVERTER SYSTEM
The Inverter range provides greater efficiency, more comfort. Provides more precise temperature control, without highs and lows, and keeps the ambient temperature constant with lower energy consumption and a significant reduction in noise and vibration levels.

ECONAVI
ECONAVI sensor determine the human activity level and the position in the room and adjust the air flow orientationfor maximum comfort and maximum savings. With ECONAVI, you can save up to 30%.

AUTOCOMFORT
The Autocomfort system detects conditions in the room and switches to energy saving operation when nobody is on the room. However, priority is given to comfort, so cooling power is increased when there's a lot of human activity. This function provides both comfort and energy saving.

SUPER QUIET MODE
Thanks to its latest generation compressor and its twin blade fan, our outdoor unit is one of the most silent on the market. The indoor unit emits an almost imperceptible 20 dB.

DOWN TO -15ºC IN COOLING ONLY MODE
The air conditioner works in cooling only mode with an outdoor temperature of -15ºC.

DOWN TO -15ºC IN HEAT PUMP
The air conditioner works in heat pump mode with an outdoor temperature as low as -15ºC.

POWERFUL MODE
High power for immediate air conditioning. The rapid and effective powerful mode is ideal for when you come home on the hottest or coldest days. It works at maximum power to reach the desired temperature in 15 minutes.

SOFT DRY OPERATION MODE
The soft dry mode eliminates excess moisture with a soft breeze and provides a sense of wellbeing without much change in temperature.

WIDE & LONG AIRFLOW VANE
This vane has been designed so that the air goes further. It sends air to every corner of the room to keep the whole room in the comfort zone.

PERSONAL AIRFLOW CREATION
Permits the air direction to be adjusted vertically and horizontally. This feature can be conveniently selected by remote control.

AUTOMATIC VERTICAL AIRFLOW CONTROL
The flap swings up and down automatically, making a vertical sweep which spreads the flow throughout the room. The flow can also be set a fixed angle with the remote control.

MANUAL HORIZONTAL AIRFLOW CONTROL

AUTO MODE (INVERTER)
Change automatically from cooling to heating in function of the temperature of the room.

SIMPLE AUTO CHANGEOVER
When the difference between the measured temperature and the set temperature is 3ºC or more, it automatically switches over the current operation mode to heating or cooling mode necessary to keep the temperature at a constantly comfortable level.

HOT START MODE
On the start of heating cycle and after defrost cycle, the indoor fan will start up once the indoor heat exchanger is warm.

Use

12-HOUR ON&OFF TIMER

REAL TIME CLOCK WITH DUAL ON&OFF TIMER
This feature enables you to preset two different sets of start/stop operation timer (hour and minute) within a 24-hour time frame.

REAL TIME CLOCK WITH SINGLE ON&OFF TIMER
The exact operating time (hour and minute) can be set in advance. From here on, the unit will operate in accordance to these preset hours every day until the system is reset.

LCD WIRELESS REMOTE CONTROLLER

Reliability

AUTOMATIC RESTART
This function permits automatic restarting if safe mode operation has stopped for some unusual reason, such as after a power cut. As soon as the power is back, the unit restarts with the parameters selected before it stopped.

LONG PIPING
This is a figure which indicates the maximum length of pipe between the outdoor unit and the indoor unit(s). The long distances permitted are demonstration of the many installations possible.

TOP-PANEL MAINTENANCE ACCESS
Maintenance of an outdoor unit used to be quite a tedious task. Now, with the possibility of removing the top cover, maintenance is quick and easy.

SELF-DIAGNOSIS FUNCTION
With this function the unit carries out a process self-diagnosis when a particular function does not work correctly. This allows faster servicing.

FEATURE COMPARISON

	MODELS	KIT-XE7-MKE KIT-XE9-MKE KIT-XE12-MKE KIT-XE15-MKE KIT-XE18-MKE KIT-XE21-MKE	KIT-E7-MKE KIT-E9-MKE KIT-E12-MKE KIT-E15-MKE KIT-E18-MKE KIT-E21-MKE KIT-E24-MKE KIT-E28-MKE	KIT-RE9-JKE-1 KIT-RE12-JKE-1 KIT-RE15-JKE-1 KIT-RE18-JKE-1 KIT-RE24-JKE-1	KIT-XE/E7-MKE-3 KIT-XE/E9-MKE-3 KIT-XE/E12-MKE-3 KIT-XE/E15-MKE-3	KIT-E9-HKEA KIT-E12-HKEA KIT-E15-HKEA KIT-E18-HKEA KIT-E21-HKEA	KIT-PW9-GKE KIT-PW12-GKE KIT-PW18-GKE KIT-PW24-JKE	KIT-V7-DKE KIT-V9-DKE KIT-V12-DKE KIT-V18-DKE KIT-V24-DKE KIT-V28-EKE	KIT-E9-GFEW-1 KIT-E12-GFEW-1 KIT-E18-GFEW-1	KIT-E15-DTE KIT-E18-DTE KIT-E21-DTE	KIT-2XE/E77-MBE KIT-2XE/E79-MBE KIT-2XE/E712-MBE KIT-2XE/E99-MBE	KIT-2XE/E99-MKE KIT-2XE/E912-MKE KIT-2XEE/1212-MKE	KIT-3XE/E7712-MKE KIT-3XE/E7715-MKE	KIT-4XE/E77712-MKE KIT-4XE/E77715-MKE KIT-4XE/E77712-MBE KIT-4XE/E77715-MBE
Healthy Air Quality	Advanced+Plus e-ion. Air purifying system	✘	✘		✘						✘	✘	✘	✘
Healthy Air Quality	Newly Designed Patrol Sensor	✘	✘		✘						✘	✘	✘	✘
Healthy Air Quality	Mild Dry Cooling	✘	✘		✘									
Healthy Air Quality	Soft Breeze			✘ For RE9, RE12 and RE15										
Healthy Air Quality	Ion Benefit					✘		✘						
Healthy Air Quality	Super Alleru-buster filter			✘ 10 years		✘	✘ Optional	✘		✘ Optional				
Healthy Air Quality	One-Touch anti-mould air filter			✘				✘	✘	✘				
Healthy Air Quality	Odour-removing function	✘	✘	✘	✘	✘	✘	✘	✘	✘	✘	✘	✘	✘
Healthy Air Quality	Removable, washable panel	✘	✘	✘	✘	✘	✘	✘	✘		✘	✘	✘	✘
Comfort	Inverter+ system	✘	✘		✘	✘			✘		✘	✘	✘	✘
Comfort	Inverter system			✘						✘				
Comfort	ECONAVI	✘	✘		✘							✘ Applicable for MKE indoors	✘ Applicable for MKE indoors	✘ Applicable for MKE indoors
Comfort	AUTOCOMFORT	✘	✘		✘							✘ Applicable for MKE indoors	✘ Applicable for MKE indoors	✘ Applicable for MKE indoors
Comfort	Super Quiet mode	✘	✘	✘ For RE9, RE12 and RE15	✘	✘		✘	✘	✘	✘	✘	✘	✘
Comfort	Down to -15ºC in cooling only					✘								
Comfort	Down to -15ºC in heat pump				✘	✘			✘				✘	✘ Applicable for 4E 23
Comfort	Powerful mode	✘	✘	✘ For RE9, RE12 and RE15	✘	✘		✘	✘	✘	✘	✘	✘	✘
Comfort	Soft dry operation mode	✘	✘	✘	✘	✘	✘	✘	✘	✘	✘	✘	✘	✘
Comfort	Wide & long airflow vane	✘ For XE7, XE9, XE12 and XE15	✘ For E7, E9, E12 and E15		✘						✘	✘	✘	✘
Comfort	Personal airflow creation	✘ For XE18 and XE21	✘ For E18, E21, E24 and E28	✘ For RE18 and RE24		✘		✘ For V18, V24 and V28						
Comfort	Automatic vertical airflow control	✘ For XE7, XE9, XE12 and XE15	✘ For E7, E9, E12 and E15	✘ For RE9, RE12 and RE15	✘		✘	✘ For V7, V9 and V12	✘	✘	✘	✘	✘	✘
Comfort	Manual horizontal airflow control	✘ For XE7, XE9, XE12 and XE15	✘ For E7, E9, E12 and E15	✘ For RE9, RE12 and RE15	✘			✘ For V7, V9 and V12	✘	✘	✘	✘	✘	✘
Comfort	AUTO mode (Inverter)	✘	✘	✘	✘	✘			✘	✘	✘	✘	✘	✘
Comfort	Simple Auto Changeover	✘	✘	✘	✘									
Comfort	Hot start mode	✘	✘	✘	✘	✘	✘		✘	✘				
USE	12-hour ON&OFF timer			✘ For RE9, RE12 and RE15			✘ For PW9 and PW12							
USE	Real time clock with dual ON&OFF timer	✘	✘		✘						✘	✘	✘	✘
USE	Real time clock with single ON&OFF timer			✘ For RE18 and RE24		✘	✘ For PW18 and PW24	✘	✘					
USE	LCD Wireless remote controller	✘	✘	✘	✘	✘	✘	✘	✘	✘	✘	✘	✘	✘
Reliability	Automatic restart	✘	✘	✘	✘	✘	✘	✘	✘	✘	✘	✘	✘	✘
Reliability	Long piping	✘ 15m (XE7, XE9, XE12 and XE15) 20 m (XE18 and XE21)	✘ 15m (E7, E9, E12 and E15) 20m (E18 / E21) 30 m (E24 / E28)	✘ 15m (RE9, RE12 and RE15) 20m (RE18) 30m (RE24)	✘ 15m	✘ 15m 20m (E18 and E21)	✘ 10m (PW9) 15m (PW12) 25m (PW18 and PW24)	✘ 10m (V7, V9) 15m (V12) 25m (V18/V24) 30m (V28)	✘ 15m 20m (E18)	✘ 20m	See page 55	See page 55	See page 55	See page 55
Reliability	Top-Panel maintenance access	✘	✘	✘	✘	✘	✘	✘	✘	✘	✘	✘	✘	✘
Reliability	Self-diagnosis function	✘	✘	✘	✘	✘			✘	✘	✘	✘	✘	✘

A class energy saving INVERTER+

WALL MOUNTED ETHEREA // INVERTER+ // SILVER

NEW ETHEREA WITH ECONAVI SENSOR, MORE EFFICIENT, MORE COMFORT, MORE DESIGN, MORE HEALTHY AIR
ECONAVI sensor determine the human activity level and the position in the room and adjust the air flow orientation for maximum comfort and maximum savings. With ECONAVI, you can save up to 30%.
Furthermore, Etherea is more efficient than ever with 64% less consumption for the non Inverter model on heat pump mode, and can reach 71% total savings when used with ECONAVI. More efficiency for bigger savings!
Etherea has an advanced air purifying system with the new Patrol Sensor to detect and eliminate contaminants.
Etherea is also able to prevent rapid decreases in room humidity with the new mild dry cooling system which increases comfort, especially when sleeping with the air conditioning running.

30% savings ECONAVI | improved comfort AUTOCOMFORT | quality air control 24 h PATROL SENSOR | pure air system e-ION PLUS | perfect humidity control MILD DRY | silent air 20 dB SUPER QUIET

Maintains a Relative Humidity up to 10% higher than cooling operation. Ideal when sleeping with the air conditioner on.

FOR XE7, XE9 AND XE12

NEW 2011

ETHEREA

INCLUDED WITH THE INDOOR UNIT

OPTIONAL WIRED REMOTE CONTROL CZ-RD514C

KIT			KIT-XE7-MKE	KIT-XE9-MKE	KIT-XE12-MKE	KIT-XE15-MKE
Indoor			CS-XE7MKEW	CS-XE9MKEW	CS-XE12MKEW	CS-XE15MKEW
Outdoor			CU-E7MKE	CU-E9MKE	CU-E12MKE	CU-E15MKE
Cooling capacity	Nominal (Min - Max)	kW	2,05 (0,75-2,40)	2,50 (0,85-3,00)	3,50 (0,85-4,00)	4,20 (0,85-5,00)
	Nominal (Min - Max)	kCal/h	1.760 (650-2.060)	2.150 (730-2.580)	3.010 (730-3,440)	3.610 (730-4.300)
EER [1]	Nominal (Min - Max)	Energy Saving	4,36 (3,13-4,14) A	4,67 (3,47-4,11) A	4,07 (3,40-3,54) A	3,33 (3,27-3,18) A
Power input Cooling	Nominal (Min - Max)	kW	0,47 (0,24-0,58)	0,535 (0,245-0,730)	0,860 (0,250-1,130)	1,26 (0,260-1,570)
Heating capacity	Nominal (Min - Max)	kW	2,80 (0,75-4,00)	3,40 (0,85-5,00)	4,00 (0,85-6,00)	5,30 (0,80-6,80)
	Nominal (Min - Max)	kCal/h	2.410 (650-3.440)	2.920 (730-4.300)	3.440 (730-5.160)	4.560 (730-5.850)
Heating capacity at -7°C	Nominal	kW	2,35	2,88	3,46	3,94
COP [1]	Nominal (Min - Max)	Energy Saving	4,41 (3,26-3,92) A	4,63 (3,54-3,85) A	4,21 (3,47-3,51) A	3,68 (3,33-3,51) A
Power input Heating	Nominal (Min - Max)	kW	0,635 (0,23-1,02)	0,735 (0,24-1,30)	0,950 (0,245-1,71)	1,44 (0,255-1,940)
Annual Energy Consumption [2]		kWh	235	268	430	630
INDOOR UNIT						
Air Volume	Cooling / Heating	m³/h	654 / 684	678 / 702	750 / 768	750 / 804
Moisture removal volume		l/h	1,3	1,5	2,0	2,4
Sound pressure Level [3]	Cooling (Hi / Lo / S-Lo)	dB(A)	37 / 24 / 20	39 / 25 / 20	42 / 28 / 20	43 / 31 / 25
	Heating (Hi / Lo / S-Lo)	dB(A)	38 / 25 / 20	40 / 27 / 20	42 / 33 / 20	43 / 35 / 29
Sound power Level	Cooling (Hi)	dB	53	55	58	59
	Heating (Hi)	dB	54	56	58	59
Dimensions	H x W x D	mm	290 x 870 x 204	290 x 870 x 204	290 x 870 x 204	290 x 870 x 204
Net weight		kg	9	9	9	9
Air purifier filter			Patrol + E-ion	Patrol + E-ion	Patrol + E-ion	Patrol + E-ion
OUTDOOR UNIT						
Power source		V	230	230	230	230
Connection		mm²	4 x 1,5	4 x 1,5	4 x 1,5	4 x 1,5
Current Cooling	Nominal	A	2,2	2,5	4,0	5,7
Current Heating	Nominal	A	3,0	3,4	4,4	6,6
Max. current		A	4,7	5,8	7,8	9,0
Air Volume	Cooling / Heating	m³/h	2,034 / 2,034	1,788 / 1,788	1,860 / 1,860	1,884 / 1,884
Sound pressure Level [3]	Cooling (Hi)	dB(A)	45	46	48	49
	Heating (Hi)	dB(A)	46	47	50	51
Sound power Level	Cooling (Hi)	dB	60	61	63	64
	Heating (Hi)	dB	61	62	65	66
Dimensions [4]	H x W x D	mm	540 x 780 x 289	540 x 780 x 289	540 x 780 x 289	540 x 780 x 289
Net weight		kg	33	34	34	34
Piping connections	Liquid pipe	inch (mm)	1/4" (6,35)	1/4" (6,35)	1/4" (6,35)	1/4" (6,35)
	Gas pipe	inch (mm)	3/8" (9,52)	3/8" (9,52)	3/8" (9,52)	1/2" (12,70)
Refrigerant Loading	R410A	kg	0,830	0,950	0,980	1,01
Elevation difference (in/out) [5]	Max	m	15	15	15	15
Piping length	Min / Max	m	3-15	3-15	3-15	3-15
Piping length without refrigerant increase	Max	m	7,5	7,5	7,5	7,5
Additional gas		g/m	20	20	20	20
Operating range [3]	Cooling Min / Max	°C	+5 / +43	+5 / +43	+5 / +43	+5 / +43
	Heating Min / Max	°C	-5 / +24	-5 / +24	-5 / +24	-5 / +24

TECHNICAL FOCUS

- **NEW!** MAXIMUM EFFICIENCY AND COMFORT WITH ECONAVI
- EXCLUSIVE SILVER DESIGN
- NEW GENERATION OF E-ION AIR PURIFYING SYSTEM WITH 24-HR PATROL SENSOR
- MILD DRY COOLING: PREVENT A RAPID DECREASE IN ROOM HUMIDITY
- SUPER QUIET! ONLY 20 dB, EQUIVALENT TO NIGHT-TIME IN THE COUNTRY (XE7, XE9 AND XE12)
- MORE POWERFUL AIRFLOW TO QUICKLY REACH THE DESIRED TEMPERATURE

eco ideas

Energy-Efficiency Classification
Most efficient level: A
(CS-XE9MKEW EER/COP: 4.67/4.63)

GLOBAL REMARKS

Rating conditions	Cooling	Heating
Inside air temperature	27ºC DB / 19ºC WB	20ºC DB
Outside air temperature	35ºC DB / 24ºC WB	7ºC DB / 6ºC WB

DB: Dry Bulb; WB: Wet Bulb
This model is not suitable to use in heating mode below -5ºC with continuous operation (24h operation).
Connectivity restriction: JKE units are not compatible with MKE units.

1) EER and COP classification is at 230 V in accordance with EU directive 2002/31/EC.
2) The annual consumption is calculated by multiplying the input power at 230 V by an avarage of 500 hours per year in cooling mode.
3) The Sound pressure level of the units shows the value measured of a position 1 meter in front of the main body and 0,8 m below the unit. The sound pressure is measured in accordance with Eurovent 6/C/006-97 specification.
4) Add 70 mm for piping port.
5) When installing the outdoor unit at a higher position than the indoor unit.

KIT-XE7-MKE // KIT-XE9-MKE // KIT-XE12-MKE // KIT-XE15-MKE

HEALTHY AIR
- E-ion plus air purifying system
- Patrol sensor to detect and eliminate contaminants
- Air conditioner and purifier with simultaneous or independent operation
- Mild Dry Cooling operation mode for increased comfort and prevention of skin moisture loss

ENERGY EFFICIENCY AND ECOLOGY
- Maximum efficiency Inverter system, for bigger savings
- **NEW!**-30% consumption with ECONAVI on heat pump (-20% on cooling mode)
- R410A refrigerant gas

COMFORT
- Super Quiet mode (from 20 dB)
- Powerful mode
- Uniform dispersion of airflow
- Automatic vertical airflow control
- Hot start mode, increased comfort on heat pump mode, no cool airflow when process starts
- Automatic restart after power cut

EASE OF USE
- Real time clock with dual ON&OFF timer
- User friendly infrared remote control
- **NEW!** Optional wired weekly timer with 6 settings per day and 42 settings per week
- **NEW!** Connectivity function (indoor unit equipped with PCB port which can be connected to outside network)

EASY INSTALLATION AND MAINTENANCE
- Removable, washable panel
- 15 m maximum connection distance
- 15 m maximum elevation difference
- Maintenance access through the top panel of the outdoor unit
- Self-diagnosis function

CU-E7MKE CU-E12MKE
CU-E9MKE CU-E15MKE

A class energy saving INVERTER+

WALL MOUNTED ETHEREA // INVERTER+ // SILVER

NEW ETHEREA WITH ECONAVI SENSOR, MORE EFFICIENT, MORE COMFORT, MORE DESIGN, MORE HEALTHY AIR
ECONAVI sensor determine the human activity level and the position in the room and adjust the air flow orientation for maximum comfort and maximum savings. With ECONAVI, you can save up to 30%.
Furthermore, Etherea is more efficient than ever with 64% less consumption for the non Inverter model on heat pump mode, and can reach 71% total savings when used with ECONAVI. More efficiency for bigger savings!
Etherea has an advanced air purifying system with the new Patrol Sensor to detect and eliminate contaminants.
Etherea is also able to prevent rapid decreases in room humidity with the new mild dry cooling system which increases comfort, especially when sleeping with the air conditioning running.

30% savings ECONAVI | improved comfort AUTOCOMFORT | quality air control 24 h PATROL SENSOR | pure air system e-ION PLUS | perfect humidity control MILD DRY

Maintains a Relative Humidity up to 10% higher than cooling operation. Ideal when sleeping with the air conditioner on.

INCLUDED WITH THE INDOOR UNIT

OPTIONAL WIRED REMOTE CONTROL CZ-RD514C

KIT			KIT-XE18-MKE	KIT-XE21-MKE
Indoor			CS-XE18MKEW	CS-XE21MKEW
Outdoor			CU-E18MKE	CU-E21MKE
Cooling capacity	Nominal (Min - Max)	kW	5,00 (0,98-6,00)	6,30 (0,98-7,10)
	Nominal (Min - Max)	kCal/h	4.300 (840-5.160)	5.420 (840-6.110)
EER [1]	Nominal (Min - Max)	Energy Saving	3,40 (3,50-2,96) A	2,85 (3,50-2,80) C
Power input Cooling	Nominal (Min - Max)	kW	1,47 (0,28-2,03)	2,21 (0,28-2,54)
Heating capacity	Nominal (Min - Max)	kW	5,80 (0,98-8,00)	7,20 (0,98-8,50)
	Nominal (Min - Max)	kCal/h	4.990 (840-6.880)	6.190 (840-7.310)
Heating capacity at -7°C	Nominal	kW	4,98	5,24
COP [1]	Nominal (Min - Max)	Energy Saving	3,77 (2,88-3,08) A	3,43 (2,88-3,09) B
Power input Heating	Nominal (Min - Max)	kW	1,54 (0,34-2,60)	2,10 (0,34-2,75)
Annual Energy Consumption [2]		kWh	735	1.105
INDOOR UNIT				
Air Volume	Cooling / Heating	m³/h	978 / 1.074	1.038 / 1.110
Moisture removal volume		l/h	2,8	3,5
Sound pressure Level [3]	Cooling (Hi / Lo / S-Lo)	dB(A)	44 / 37 / 34	45 / 37 / 34
	Heating (Hi / Lo / S-Lo)	dB(A)	44 / 37 / 34	45 / 37 / 34
Sound power Level	Cooling (Hi)	dB	60	61
	Heating (Hi)	dB	60	61
Dimensions	H x W x D	mm	290 x 1.070 x 235	290 x 1.070 x 235
Net weight		kg	12	12
Air purifier filter			Patrol + E-ion	Patrol + E-ion
OUTDOOR UNIT				
Power source		V	230	230
Connection		mm²	4 x 2,5	4 x 2,5
Current Cooling	Nominal	A	6,6	9,9
Current Heating	Nominal	A	6,9	9,4
Max, current		A	11,4	12,1
Air Volume	Cooling / Heating	m³/h	2.352 / 2.274	2.502 / 2.424
Sound pressure Level [3]	Cooling (Hi)	dB(A)	47	48
	Heating (Hi)	dB(A)	47	49
Sound power Level	Cooling (Hi)	dB	61	62
	Heating (Hi)	dB	61	63
Dimensions [4]	H x W x D	mm	695 x 875 x 320	695 x 875 x 320
Net weight		kg	45	46
Piping connections	Liquid pipe	inch (mm)	1/4" (6,35)	1/4" (6,35)
	Gas pipe	inch (mm)	1/2" (12,70)	1/2" (12,70)
Refrigerant Loading	R410A	kg	1,22	1,28
Elevation difference (in/out) [5]	Max	m	15	15
Piping length	Min / Max	m	3-20	3-20
Piping length without refrigerant increase	Max	m	7,5	7,5
Additional gas		g/m	20	20
Operating range [3]	Cooling Min / Max	°C	+5 / +43	+5 / +43
	Heating Min / Max	°C	-5 / +24	-5 / +24

TECHNICAL FOCUS

- **NEW!** MAXIMUM EFFICIENCY AND COMFORT WITH ECONAVI
- EXCLUSIVE SILVER DESIGN
- NEW GENERATION OF E-ION AIR PURIFYING SYSTEM WITH 24-HR PATROL SENSOR
- MILD DRY COOLING: PREVENT A RAPID DECREASE IN ROOM HUMIDITY
- MORE POWERFUL AIRFLOW TO QUICKLY REACH THE DESIRED TEMPERATURE

GLOBAL REMARKS

Rating conditions	Cooling	Heating
Inside air temperature	27°C DB / 19°C WB	20°C DB
Outside air temperature	35°C DB / 24°C WB	7°C DB / 6°C WB

DB: Dry Bulb; WB: Wet Bulb
This model is not suitable to use in heating mode below -5°C with continuous operation (24h operation).
Connectivity restriction: JKE units are not compatible with MKE units.

1) EER and COP classification is at 230 V in accordance with EU directive 2002/31/EC.
2) The annual consumption is calculated by multiplying the input power at 230 V by an avarage of 500 hours per year in cooling mode.
3) The Sound pressure level of the units shows the value measured of a position 1 meter in front of the main body and 0,8 meters below the unit. The sound pressure is measured in accordance with Eurovent 6/C/006-97 specification.
4) Add 70 mm for piping port.
5) When installing the outdoor unit at a higher position than the indoor unit.

KIT-XE18-MKE // KIT-XE21-MKE

HEALTHY AIR
- E-ion plus air purifying system
- Patrol sensor to detect and eliminate contaminants
- Air conditioner and purifier with simultaneous or independent operation
- Mild Dry Cooling operation mode for increased comfort and prevention of skin moisture loss

ENERGY EFFICIENCY AND ECOLOGY
- Maximum efficiency Inverter system, for bigger savings
- **NEW!** -30% consumption with ECONAVI on heat pump (-20% on cooling mode)
- R410A refrigerant gas

COMFORT
- Super Quiet mode
- Powerful mode
- Uniform dispersion of airflow
- Automatic vertical airflow control
- Hot start mode, increased comfort on heat pump mode, no cool airflow when process starts
- Automatic restart after power cut

EASE OF USE
- Real time clock with dual ON&OFF timer
- User friendly infrared remote control
- **NEW!** Optional wired weekly timer with 6 settings per day and 42 settings per week
- **NEW!** Connectivity function (indoor unit equipped with PCB port which can be connected to outside network)

EASY INSTALLATION AND MAINTENANCE
- Removable, washable panel
- 15 m maximum connection distance (20 m for XE18 and XE21)
- 15 m maximum elevation difference
- Maintenance access through the top panel of the outdoor unit
- Self-diagnosis function

CU-E18MKE
CU-E21MKE

A class energy saving INVERTER+

WALL MOUNTED ETHEREA // INVERTER+ // WHITE

NEW ETHEREA WITH ECONAVI SENSOR, MORE EFFICIENT, MORE COMFORT, MORE DESIGN, MORE HEALTHY AIR
ECONAVI sensor determine the human activity level and the position in the room and adjust the air flow orientation for maximum comfort and maximum savings. With ECONAVI, you can save up to 30%.
Furthermore, Etherea is more efficient than ever with 64% less consumption for the non Inverter model on heat pump mode, and can reach 71% total savings when used with ECONAVI. More efficiency for bigger savings!
Etherea has an advanced air purifying system with the new Patrol Sensor to detect and eliminate contaminants.
Etherea is also able to prevent rapid decreases in room humidity with the new mild dry cooling system which increases comfort, especially when sleeping with the air conditioning running.

NEW 2011

ETHEREA

30% savings ECONAVI | improved comfort AUTOCOMFORT | quality air control 24 h PATROL SENSOR | pure air system e-ION PLUS | perfect humidity control MILD DRY | silent air 20 dB SUPER QUIET

Maintains a Relative Humidity up to 10% higher than cooling operation. Ideal when sleeping with the air conditioner on.

FOR E7, E9 AND E12

OPTIONAL WIRED REMOTE CONTROL CZ-RD514C

INCLUDED WITH THE INDOOR UNIT

KIT			KIT-E7-MKE	KIT-E9-MKE	KIT-E12-MKE	KIT-E15-MKE
Indoor			CS-E7MKEW	CS-E9MKEW	CS-E12MKEW	CS-E15MKEW
Outdoor			CU-E7MKE	CU-E9MKE	CU-E12MKE	CU-E15MKE
Cooling capacity	Nominal (Min - Max)	kW	2,05 (0,75-2,40)	2,50 (0,85-3,00)	3,50 (0,85-4,00)	4,20 (0,85-5,00)
	Nominal (Min - Max)	kCal/h	1.760 (650-2.060)	2.150 (730-2.580)	3.010 (730-3.440)	3.610 (730-4.300)
EER [1]	**Nominal (Min - Max)**	**Energy Saving**	**4,36 (3,13-4,14) A**	**4,67 (3,47-4,11) A**	**4,07 (3.40-3,54) A**	**3,33 (3,27-3,18) A**
Power input Cooling	Nominal (Min - Max)	kW	0,47 (0,240-0,580)	0,535 (0,245-0,730)	0,860 (0,250-1,130)	1,26 (0,260-1,570)
Heating capacity	Nominal (Min - Max)	kW	2,80 (0,75-4,00)	3,40 (0,85-5,00)	4,00 (0,85-6,00)	5,30 (0,85-6,80)
	Nominal (Min - Max)	kCal/h	2.410 (650-3.440)	2.920 (730-4.300)	3.440 (730-5.160)	4.560 (730-5850)
Heating capacity at -7°C	Nominal	kW	2,35	2,88	3,46	3,94
COP [1]	**Nominal (Min - Max)**	**Energy Saving**	**4,41 (3,26-3,92) A**	**4,63 (3,54-3,85) A**	**4,21 (3,47-3,51) A**	**3,68 (3,33-3,51) A**
Power input Heating	Nominal (Min - Max)	kW	0,635 (0,23-1,02)	0,735 (0,24-1,30)	0,950 (0,245-1,71)	1,44 (0,255-1,940)
Annual Energy Consumption [2]		kWh	235	268	430	630
INDOOR UNIT						
Air Volume	Cooling / Heating	m^3/h	654 / 684	678 / 702	750 / 768	750 / 804
Moisture removal volume		l/h	1,3	1,5	2,0	2,4
Sound pressure Level [3]	Cooling (Hi / Lo / S-Lo)	dB(A)	37 / 24 / 20	39 / 25 / 20	42 / 28 / 20	43 / 31 / 25
	Heating (Hi / Lo / S-Lo)	dB(A)	38 / 25 / 20	40 / 27 / 20	42 / 33 / 20	43 / 35 / 29
Sound power Level	Cooling (Hi)	dB	53	55	58	59
	Heating (Hi)	dB	54	56	58	59
Dimensions	H x W x D	mm	290 x 870 x 204	290 x 870 x 204	290 x 870 x 204	290 x 870 x 204
Net weight		kg	9	9	9	9
Air purifier filter			Patrol + E-ion	Patrol + E-ion	Patrol + E-ion	Patrol + E-ion
OUTDOOR UNIT						
Power source		V	230	230	230	230
Connection		mm^2	4 x 1,5	4 x 1,5	4 x 1,5	4 x 1,5
Current Cooling	Nominal	A	2,2	2,5	4,0	5,7
Current Heating	Nominal	A	3,0	3,4	4,4	6,6
Max. current		A	4,7	5,8	7,8	9,0
Air Volume	Cooling / Heating	m^3/h	2.034 / 2.034	1.788 / 1.788	1.860 / 1.860	1.884 / 1.884
Sound pressure Level [3]	Cooling (Hi)	dB(A)	45	46	48	49
	Heating (Hi)	dB(A)	46	47	50	51
Sound power Level	Cooling (Hi)	dB	60	61	63	64
	Heating (Hi)	dB	61	62	65	66
Dimensions [4]	H x W x D	mm	540 x 780 x 289	540 x 780 x 289	540 x 780 x 289	540 x 780 x 289
Net weight		kg	33	34	34	34
Piping connections	Liquid pipe	inch (mm)	1/4" (6,35)	1/4" (6,35)	1/4" (6,35)	1/4" (6,35)
	Gas pipe	inch (mm)	3/8" (9,52)	3/8" (9,52)	3/8" (9,52)	1/2" (12,70)
Refrigerant Loading	R410A	kg	0,830	0,950	0,980	1,01
Elevation difference (in / out) [5]	Max	m	15	15	15	15
Piping length	Min / Max	m	3-15	3-15	3-15	3-15
Piping length without refrigerant increase	Max	m	7,5	7,5	7,5	7,5
Additional gas		g/m	20	20	20	20
Operating range [3]	Cooling Min / Max	°C	+5 / +43	+5 / +43	+5 / +43	+5 / +43
	Heating Min / Max	°C	-5 / +24	-5 / +24	-5 / +24	-5 / +24

TECHNICAL FOCUS

- **NEW!** MAXIMUM EFFICIENCY AND COMFORT WITH ECONAVI
- EXCLUSIVE WHITE DESIGN
- NEW GENERATION OF E-ION AIR PURIFYING SYSTEM WITH 24-HR PATROL SENSOR
- MILD DRY COOLING: PREVENT A RAPID DECREASE IN ROOM HUMIDITY
- SUPER QUIET! ONLY 20 dB, EQUIVALENT TO NIGHT-TIME IN THE COUNTRY (E7, E9 AND E12)
- MORE POWERFUL AIRFLOW TO QUICKLY REACH THE DESIRED TEMPERATURE

GLOBAL REMARKS

Rating conditions	Cooling	Heating
Inside air temperature	27°C DB / 19°C WB	20°C DB
Outside air temperature	35°C DB / 24°C WB	7°C DB / 6°C WB

DB: Dry Bulb; WB: Wet Bulb
This model is not suitable to use in heating mode below -5°C with continuous operation (24h operation).
Connectivity restriction: JKE units are not compatible with MKE units.

1) EER and COP classification is at 230 V in accordance with EU directive 2002/31/EC.
2) The annual consumption is calculated by multiplying the input power at 230 V by an avarage of 500 hours per year in cooling mode.
3) The Sound pressure level of the units shows the value measured of a position 1 meter in front of the main body and 0,8 meters below the unit. The sound pressure is measured in accordance with Eurovent 6/C/006-97 specification.
4) Add 70 mm for piping port.
5) When installing the outdoor unit at a higher position than the indoor unit.

KIT-E7-MKE // KIT-E9-MKE // KIT-E12-MKE // KIT-E15-MKE

HEALTHY AIR
- E-ion plus air purifying system
- Patrol sensor to detect and eliminate contaminants
- Air conditioner and purifier with simultaneous or independent operation
- Mild Dry Cooling operation mode for increased comfort and prevention of skin moisture loss

ENERGY EFFICIENCY AND ECOLOGY
- Maximum efficiency Inverter system, for bigger savings
- **NEW!** -30% consumption with ECONAVI on heat pump (-20% on cooling mode)
- R410A refrigerant gas

COMFORT
- Super Quiet mode (from 20dB)
- Powerful mode
- Uniform dispersion of airflow
- Automatic vertical airflow control
- Hot start mode, increased comfort on heat pump mode, no cool airflow when process starts
- Automatic restart after power cut

EASE OF USE
- Real time clock with dual ON&OFF timer
- User friendly infrared remote control
- **NEW!** Optional wired weekly timer with 6 settings per day and 42 settings per week
- **NEW!** Connectivity function (indoor unit equipped with PCB port which can be connected to outside network)

EASY INSTALLATION AND MAINTENANCE
- Removable, washable panel
- 15 m maximum connection distance
- 15 m maximum elevation difference
- Maintenance access through the top panel of the outdoor unit
- Self-diagnosis function

CU-E7MKE CU-E12MKE
CU-E9MKE CU-E15MKE

A class energy saving INVERTER+

WALL MOUNTED ETHEREA // INVERTER+ // WHITE

NEW ETHEREA WITH ECONAVI SENSOR, MORE EFFICIENT, MORE COMFORT, MORE DESIGN, MORE HEALTHY AIR
ECONAVI sensor determine the human activity level and the position in the room and adjust the air flow orientation for maximum comfort and maximum savings. With ECONAVI, you can save up to 30%.
Furthermore, Etherea is more efficient than ever with 64% less consumption for the non Inverter model on heat pump mode, and can reach 71% total savings when used with ECONAVI. More efficiency for bigger savings!
Etherea has an advanced air purifying system with the new Patrol Sensor to detect and eliminate contaminants.
Etherea is also able to prevent rapid decreases in room humidity with the new mild dry cooling system which increases comfort, especially when sleeping with the air conditioning running.

30% savings ECONAVI | improved comfort AUTOCOMFORT | quality air control 24 h PATROL SENSOR | pure air system e-ION PLUS | perfect humidity control MILD DRY

Maintains a Relative Humidity up to 10% higher than cooling operation. Ideal when sleeping with the air conditioner on.

NEW 2011

ETHEREA

KIT			KIT-E18-MKE	KIT-E21-MKE	KIT-E24-MKE	KIT-E28-MKE
Indoor			CS-E18MKEW	CS-E21MKEW	CS-E24MKES	CS-E28MKES
Outdoor			CU-E18MKE	CU-E21MKE	CU-E24MKE	CU-E28MKE
Cooling capacity	Nominal (Min - Max)	kW	5,00 (0,98-6,00)	6,30 (0,98-7,10)	6,80 (0,98-8,10)	7,65 (0,98-8,60)
	Nominal (Min - Max)	kCal/h	4.300 (840-5.160)	5.420 (840-6.110)	5.850 (840-6.970)	6580 (840-7400)
EER [1]	Nominal (Min - Max)	Energy Saving	3,40 (3,50-2,96) A	2,85 (3,50-2,80) C	3,21 (2,58-3,00) A	3,01 (2,58-2,92) B
Power input Cooling	Nominal (Min - Max)	kW	1,47 (0,28-2,03)	2,21 (0,28-2,54)	2,12 (0,38-2,7)	2,54 (0,38-2,95)
Heating capacity	Nominal (Min - Max)	kW	5,80 (0,98-8,00)	7,20 (0,98-8,50)	8,60 (0,98-9,90)	9,60 (0,98-11,00)
	Nominal (Min - Max)	kCal/h	4990 (840-6.880)	6.190 (840-7.310)	7.400 (840-8.510)	8.260 (840-9460)
Heating capacity at -7°C	Nominal	kW	4,98	5,24	6,13	6,77
COP [1]	Nominal (Min - Max)	Energy Saving	3,77 (2,88-3,08) A	3,43 (2,88-3,09) B	3,23 (2,18-3,09) C	2,91 (2,18-2,93) D
Power input Heating	Nominal (Min - Max)	kW	1,54 (0,34-2,60)	2,10 (0,34-2,75)	2,66 (0,45-3,20)	3,30 (0,45-3,75)
Annual Energy Consumption [2]		kWh	735	1.105	1.060	1.270
INDOOR UNIT						
Air Volume	Cooling / Heating	m³/h	978 / 1.074	1.038 / 1.110	1.104 / 1.170	1.158 / 1.206
Moisture removal volume		l/h	2,8	3,5	3,9	4,5
Sound pressure Level [3]	Cooling (Hi / Lo / S-Lo)	dB(A)	44 / 37 / 34	45 / 37 / 34	47 / 38 / 35	49 / 38 / 35
	Heating (Hi / Lo / S-Lo)	dB(A)	44 / 37 / 34	45 / 37/ 34	47 / 38 / 35	48 / 38 / 35
Sound power Level	Cooling (Hi)	dB	60	61	63	65
	Heating (Hi)	dB	60	61	63	64
Dimensions	H x W x D	mm	290 x 1.070 x 235	290 x 1.070 x 235	290 x 1.070 x 235	290 x 1.070 x 235
Net weight		kg	12	12	12	12
Air purifier filter			Patrol + E-ion	Patrol + E-ion	Patrol + E-ion	Patrol + E-ion
OUTDOOR UNIT						
Power source		V	230	230	230	230
Connection		mm²	4 x 2,5	4 x 2,5	4 x 2,5	4 x 2,5
Current Cooling	Nominal	A	6,6	9,9	9,7	11,5
Current Heating	Nominal	A	6,9	9,4	12,1	15
Max. current		A	11,4	12,1	14,6	15,6
Air Volume	Cooling / Heating	m³/h	2.352 / 2.274	2.502 / 2.424	3.012 / 3.012	3.270 / 3.270
Sound pressure Level [3]	Cooling (Hi)	dB(A)	47	48	52	53
	Heating (Hi)	dB(A)	47	49	52	53
Sound power Level	Cooling (Hi)	dB	61	62	66	67
	Heating (Hi)	dB	61	63	66	67
Dimensions [4]	H x W x D	mm	695 x 875 x 320	695 x 875 x 320	795 x 875 x 320	795 x 875 x 320
Net weight		kg	45	46	65	66
Piping connections	Liquid pipe	inch (mm)	1/4" (6,35)	1/4" (6,35)	1/4" (6,35)	1/4" (6,35)
	Gas pipe	inch (mm)	1/2" (12,70)	1/2" (12,70)	5/8" (15,88)	5/8" (15,88)
Refrigerant Loading	R410A	kg	1,122	1,28	1,70	1,80
Elevation difference (in/out) [5]	Max	m	15	15	20	20
Piping length	Min / Max	m	3-20	3-20	3-30	3-30
Piping length without refrigerant increase	Max	m	7,5	7,5	10	10
Additional gas		g/m	20	20	30	30
Operating range [3]	Cooling Min / Max	°C	+5 / +43	+5 / +43	+16 / +43	+16 / +43
	Heating Min / Max	°C	-5 / +24	-5 / +24	-5 / +24	-5 / +24

TECHNICAL FOCUS

- **NEW!** MAXIMUM EFFICIENCY AND COMFORT WITH ECONAVI
- EXCLUSIVE WHITE DESIGN
- NEW GENERATION OF E-ION AIR PURIFYING SYSTEM WITH 24-HR PATROL SENSOR
- MILD DRY COOLING: PREVENT A RAPID DECREASE IN ROOM HUMIDITY
- MORE POWERFUL AIRFLOW TO QUICKLY REACH THE DESIRED TEMPERATURE

GLOBAL REMARKS

Rating conditions	Cooling	Heating
Inside air temperature	27ºC DB / 19ºC WB	20ºC DB
Outside air temperature	35ºC DB / 24ºC WB	7ºC DB / 6ºC WB

DB: Dry Bulb; WB: Wet Bulb
This model is not suitable to use in heating mode below -5ºC with continuous operation (24h operation).
Connectivity restriction: JKE units are not compatible with MKE units.

1) EER and COP classification is at 230 V in accordance with EU directive 2002/31/EC.
2) The annual consumption is calculated by multiplying the input power at 230 V by an avarage of 500 hours per year in cooling mode.
3) The Sound pressure level of the units shows the value measured of a position 1 meter in front of the main body and 0,8 meters below the unit. The sound pressure is measured in accordance with Eurovent 6/C/006-97 specification.
4) Add 70 mm for piping port.
5) When installing the outdoor unit at a higher position than the indoor unit.

KIT-E18-MKE // KIT-E21-MKE // KIT-E24-MKE // KIT-E28-MKE

HEALTHY AIR
- E-ion plus air purifying system
- Patrol sensor to detect and eliminate contaminants
- Air conditioner and purifier with simultaneous or independent operation
- Mild Dry Cooling operation mode for increased comfort and prevention of skin moisture loss

ENERGY EFFICIENCY AND ECOLOGY
- Maximum efficiency Inverter system, for bigger savings
- **NEW!** -30% consumption with ECONAVI on heat pump (-20% on cooling mode)
- R410A refrigerant gas

COMFORT
- Super Quiet mode
- Powerful mode
- Uniform dispersion of airflow
- Automatic vertical airflow control
- Hot start mode, increased comfort on heat pump mode, no cool airflow when process starts
- Automatic restart after power cut

EASE OF USE
- Real time clock with dual ON&OFF timer
- User friendly infrared remote control
- **NEW!** Optional wired weekly timer with 6 settings per day and 42 settings per week
- **NEW!** Connectivity function (indoor unit equipped with PCB port which can be connected to outside network)

EASY INSTALLATION AND MAINTENANCE
- Removable, washable panel
- 20 m maximum connection distance (30 m for E24 and E28)
- 15 m maximum elevation difference (20 m for E24 and E28)
- Maintenance access through the top panel of the outdoor unit
- Self-diagnosis function

CU-E18MKE
CU-E21MKE

CU-E24MKE
CU-E28MKE

A class energy saving INVERTER+

WALL MOUNTED ETHEREA // INVERTER+

NEW ETHEREA WITH ECONAVI, MORE EFFICIENT, MORE COMFORT, MORE DESIGN, MORE HEALTHY AIR
ECONAVI's sensor technology uses factors such as speed, frequency and temperature to determine the human activity level in the room for maximum comfort and maximum savings. With ECONAVI, you can save up to 30%. Furthermore, Etherea is more efficient than ever with 64% less consumption for the non Inverter model on heat pump mode, and can reach 71% total savings when used with ECONAVI. More efficiency for bigger savings!
Etherea has an advanced air purifying system with the new Patrol Sensor to detect and eliminate contaminants.
Etherea is also able to prevent rapid decreases in Room humidity with the new mild dry cooling system which increases comfort, especially when sleeping with the air conditioning running.

30% savings – ECONAVI
improved comfort – AUTOCOMFORT
quality air control 24 h – PATROL SENSOR
pure air system – e-ION PLUS
perfect humidity control – MILD DRY
Maintains a Relative Humidity up to 10% higher than cooling operation. Ideal when sleeping with the air conditioner on.
silent air 20 dB – SUPER QUIET
FOR XE7, E7, XE9, E9, XE12 AND E12
down to -15°C in heating mode – OUTDOOR TEMPERATURE

NEW 2011

ETHEREA

CS-XE7MKEW // CS-XE9MKEW // CS-XE12MKEW // CS-XE15MKE-3

INCLUDED WITH THE INDOOR UNIT

SILVER KIT			KIT-XE7-MKE-3	KIT-XE9-MKE-3	KIT-XE12-MKE-3	KIT-XE15-MKE-3
Indoor			CS-XE7MKEW	CS-XE9MKEW	CS-XE12MKEW	CS-XE15MKE-3
Outdoor			CU-E7MKE-3	CU-E9MKE-3	CU-E12MKE-3	CU-E15MKE-3
WHITE KIT			KIT-E7-MKE-3	KIT-E9-MKE-3	KIT-E12-MKE-3	KIT-E15-MKE-3
Indoor			CS-E7MKEW	CS-E9MKEW	CS-E12MKEW	CS-E15MKEW-3
Outdoor			CU-E7MKE-3	CU-E9MKE-3	CU-E12MKE-3	CU-E15MKE-3
Cooling capacity	Nominal (Min - Max)	kW	2,05 (0,75-2,40)	2,50 (0,85-3,00)	3,50 (0,85-4,00)	4,20 (0,98-5,00)
	Nominal (Min - Max)	kCal/h	1.760 (650-2.060)	2.150 (730-2.580)	3.010 (730-3.440)	3.610 (840-4.300)
EER [1]	**Nominal (Min - Max)**	**Energy Saving**	**4,36 (3,13-4,14) A**	**4,67 (3,47-4,11) A**	**3,87 (3,40-3,39) A**	**3,44 (3,50-3,13) A**
Power input Cooling	Nominal (Min - Max)	kW	0,47 (0,24-0,58)	0,535 (0,245-0,730)	0,905 (0,250-1,180)	1,22 (0,28-1,60)
Heating capacity	Nominal (Min - Max)	kW	2,80 (0,75-4,00)	3,40 (0,85-5,00)	4,40 (0,85-6,70)	5,40 (0,98-7,10)
	Nominal (Min - Max)	kCal/h	2.410 (650-3.440)	2.920 (730-4.300)	3.780 (730-5.760)	4.640 (840-6110)
Heating capacity at -7°C	Nominal	kW	2,35	2,88	3,75	4,10
COP [1]	**Nominal (Min - Max)**	**Energy Saving**	**4,41 (3,26-3,92) A**	**4,63 (3,54-3,85) A**	**4,04 (3,47-3,47) A**	**3,70 (2,88-3,21) A**
Power input Heating	Nominal (Min - Max)	kW	0,635 (0,23-1,02)	0,735 (0,240-1,30)	1,09 (0,245-1,93)	1,46 (0,340-2,210)
Annual Energy Consumption [2]		kWh	235	268	453	610
INDOOR UNIT						
Air Volume	Cooling / Heating	m³/h	654 / 684	678 / 702	750 / 768	750 / 804
Moisture removal volume		l/h	1,3	1,5	2,0	2,4
Sound pressure Level [3]	Cooling (Hi / Lo / S-Lo)	dB(A)	37 / 24 / 20	39 / 25 / 20	42 / 28 / 20	43 / 32 / 29
	Heating (Hi / Lo / S-Lo)	dB(A)	38 / 25 / 20	40 / 27 / 20	42 / 33 / 20	43 / 35 / 29
Sound power Level	Cooling (Hi)	dB	53	55	58	59
	Heating (Hi)	dB	54	56	58	59
Dimensions	H x W x D	mm	290 x 870 x 204	290 x 870 x 204	290 x 870 x 204	290 x 870 x 204
Net weight		kg	9	9	9	9
Air purifier filter			Patrol + E-ion	Patrol + E-ion	Patrol + E-ion	Patrol + E-ion
OUTDOOR UNIT						
Power source		V	230	230	230	230
Connection		mm²	4 x 1,5	4 x 1,5	4 x 1,5	4 x 1,5
Current (Nominal)	Cooling / Heating	A	2,2 / 3,0	2,5 / 3,4	4,1 / 5,1	5,5 / 6,6
Max. current		A	4,7	5,8	8,9	9,7
Air Volume	Cooling / Heating	m³/h	2.034 / 2.034	1.788 / 1.788	1.860 / 1.860	2.052 / 1.980
Sound pressure Level [3]	Cooling / Heating (Hi)	dB(A)	45 / 46	46 / 47	48 / 50	46 / 46
Sound power Level	Cooling / Heating (Hi)	dB	60 / 61	61 / 62	63 / 65	61 / 61
Dimensions [4]	H x W x D	mm	540 x 780 x 289	540 x 780 x 289	540 x 780 x 289	695 x 875 x 320
Net weight		kg	33	34	34	45
Piping connections	Liquid pipe	inch (mm)	1/4" (6,35)	1/4" (6,35)	1/4" (6,35)	1/4" (6,35)
	Gas pipe	inch (mm)	3/8" (9,52)	3/8" (9,52)	3/8" (9,52)	1/2" (12,70)
Refrigerant Loading	R410A	kg	0,830	0,950	0,970	1,04
Elevation difference (in/out) [5]	Max	m	15	15	15	15
Piping length	Min / Max	m	3-15	3-15	3-15	3-15
Piping length without refrigerant increase	Max	m	7,5	7,5	7,5	7,5
Additional gas		g/m	20	20	20	20
Operating range [3]	Cooling Min / Max	°C	+5 / +43	+5 / +43	+5 / +43	+5 / +43
	Heating Min / Max	°C	-15 / +24	-15 / +24	-15 / +24	-15 / +24

Specifications subject to change without notice

TECHNICAL FOCUS

- **NEW!** MAXIMUM EFFICIENCY AND COMFORT WITH ECONAVI
- EXCLUSIVE WHITE DESIGN
- NEW GENERATION OF E-ION AIR PURIFYING SYSTEM WITH 24-HR PATROL SENSOR
- MILD DRY COOLING: PREVENT A RAPID DECREASE IN ROOM HUMIDITY
- SUPER QUIET! ONLY 20 dB, EQUIVALENT TO NIGHT-TIME IN THE COUNTRY (XE7, E7, XE9, E9, XE12 AND E12)
- MORE POWERFUL AIRFLOW TO QUICKLY REACH THE DESIRED TEMPERATURE

CS-E7MKEW // CS-E9MKEW // CS-E12MKEW // CS-E15MKE-3

GLOBAL REMARKS

Rating conditions	Cooling	Heating
Inside air temperature	27ºC DB / 19ºC WB	20ºC DB
Outside air temperature	35ºC DB / 24ºC WB	7ºC DB / 6ºC WB

DB: Dry Bulb; WB: Wet Bulb
This model is not suitable to use in heating mode below -5ºC with continuous operation (24h operation).
Connectivity restriction: JKE units are not compatible with MKE units.

1) EER and COP classification is at 230 V in accordance with EU directive 2002/31/EC.
2) The annual consumption is calculated by multiplying the input power at 230 V by an avarage of 500 hours per year in cooling mode.
3) The Sound pressure level of the units shows the value measured of a position 1 meter in front of the main body and 0,8 meters below the unit. The sound pressure is measured in accordance with Eurovent 6/C/006-97 specification.
4) Add 70 mm for piping port.
5) When installing the outdoor unit at a higher position than the indoor unit.

KIT-XE7-MKE-3 // KIT-XE9-MKE-3 // KIT-XE12-MKE-3 // KIT-XE15-MKE-3 // KIT-E7-MKE-3 // KIT-E9-MKE-3 // KIT-E12-MKE-3 // KIT-E15-MKE-3

HEALTHY AIR
- E-ion plus air purifying system
- Patrol sensor to detect and eliminate contaminants
- Air conditioner and purifier with simultaneous or independent operation
- Mild Dry Cooling operation mode for increased comfort and prevention of skin moisture loss

ENERGY EFFICIENCY AND ECOLOGY
- Maximum efficiency Inverter system, for bigger savings
- **NEW!** -30% consumption with ECONAVI on heat pump (-20% on cooling mode)
- R410A refrigerant gas

COMFORT
- Super Quiet mode (from 20dB)
- Powerful mode
- Uniform dispersion of airflow
- Automatic vertical airflow control
- Hot start mode, increased comfort on heat pump mode, no cool airflow when process starts
- Automatic restart after power cut

EASE OF USE
- Real time clock with dual ON&OFF timer
- User friendly infrared remote control
- **NEW!** Optional wired weekly timer with 6 settings per day and 42 settings per week
- **NEW!** Connectivity function (indoor unit equipped with PCB port which can be connected to outside network)

EASY INSTALLATION AND MAINTENANCE
- Removable, washable panel
- 15 m maximum connection distance
- 15 m maximum elevation difference
- Maintenance access through the top panel of the outdoor unit
- Self-diagnosis function

CU-E7MKE-3 CU-E9MKE-3 CU-E12MKE-3 CU-E15MKE-3

A class energy saving
INVERTER

WALL MOUNTED RE TYPE // STANDARD INVERTER

RE:Inverter models are powerful and efficient and are always there when you need them. Furthermore, with the Alleru-buster anti allergic filter, you can always enjoy the best quality air, without viruses, moulds and bacteria.

prevention allergy filter — ALLERU-BUSTER
relaxing breeze effect — SOFT BREEZE
silent air 22 dB — SUPER QUIET
FOR RE9 AND RE12

CS-RE9JKE-1 // CS-RE12JKE-1 // CS-RE15JKE-1

FOR RE9, RE12 AND RE15. INCLUDED WITH THE INDOOR UNIT

FOR RE18 AND RE24. INCLUDED WITH THE INDOOR UNIT

KIT			KIT-RE9-JKE-1	KIT-RE12-JKE-1	KIT-RE15-JKE-1	KIT-RE18-JKE-1	KIT-RE24-JKE-1
Indoor			CS-RE9JKE-1	CS-RE12JKE-1	CS-RE15JKE-1	CS-RE18JKE-1	CS-RE24JKE-1
Outdoor			CU-RE9JKE-1	CU-RE12JKE-1	CU-RE15JKE-1	CU-RE18JKE-1	CU-RE24JKE-1
Cooling capacity	Nominal (Min - Max)	kW	2,50 (0,90-3,00)	3,50 (0,90-3,90)	4,20 (1,00-4,60)	5,00 (0,90-6,00)	6,80 (0,90-8,10)
	Nominal (Min - Max)	kCal/h	2.150 (770-2.580)	3.010 (770-3.350)	3.610 (860-3960)	4.300 (770-5.160)	5.850 (770-6.970)
EER [1]	Nominal (Min - Max)	Energy Saving	3,57 (4,74-3,00) A	3,47 (5,29-3,25) A	3,33 (4,76-2,78) A	3,40 (4,19-2,96) A	3,21 (2,57-3,00) A
Power input Cooling	Nominal (Min - Max)	kW	0,70 (0,19-1,00)	1,01 (0,17-1,2)	1,26 (0,21-1,65)	1,47 (0,215-2,03)	2,12 (0,35-2,70)
Heating capacity	Nominal (Min - Max)	kW	3,30 (0,90-4,10)	4,25 (0,90-5,10)	5,00 (0,90-6,80)	5,80 (0,90-8,00)	8,60 (0,90-9,90)
	Nominal (Min - Max)	kCal/h	2.840 (770-3.520)	3.660 (770-4.390)	4.300 (770-5848)	4.990 (770-6.880)	7.400 (770-8.510)
COP [1]	Nominal (Min - Max)	Energy Saving	4,02 (5,29-3,57) A	3,79 (6,00-3,49) A	3,61 (4,28-2,98) A	3,77 (3,67-3,08) A	3,23 (2,50-3,09) C
Power input Heating	Nominal (Min - Max)	kW	0,82 (0,17-1,15)	1,12 (0,15-1,46)	1,385(0,21-2,280)	1,54 (0,245-2,60)	2,66 (0,36-3,20)
Annual Energy Consumption [2]		kWh	350	505	630	735	1.060
INDOOR UNIT							
Power source		V	230	230	230	230	230
Connection		mm²	4 x 1,5	4 x 1,5	4 x 1,5	4 x 2,5	4 x 2,5
Current Cooling	Nominal	A	3,30	4,7	6,00	6,7	9,7
Current Heating	Nominal	A	3,70	5,2	6,30	7,0	12,1
Max. current		A	5,10	6,80	10,5	11,7	14,6
Air Volume	Cooling / Heating	m³/h	750 / 750	756 / 798	840 / 936	978 / 1.074	1.104 / 1.170
Moisture removal volume		l/h	1,4	2,0	2,4	2,8	3,9
Sound pressure Level [3]	Cooling (Hi / Lo / S-Lo)	dB(A)	42 / 27 / 22	42 / 30 / 22	46 / 31 / 29	44 / 37	47 / 38
	Heating (Hi / Lo / S-Lo)	dB(A)	42 / 27 / 25	42 / 33 / 25	46 / 34 / 28	44 / 37	47 / 38
Sound power Level	Cooling (Hi)	dB	58	58	62	60	63
	Heating (Hi)	dB	58	58	62	60	63
Dimensions	H x W x D	mm	290 x 848 x 204	290 x 848 x 204	290 x 848 x 204	290 x 1.070 x 235	290 x 1.070 x 235
Net weight		kg	9	9	9	12	12
Air purifier filter			Alleru-buster filter	Alleru-buster filter	Alleru-buster filter	Alleru-buster filter	Alleru-buster filter
OUTDOOR UNIT							
Air Volume	Cooling / Heating	m³/h	1.734 / 1.734	1.830 / 1.830	1.872 / 1.794	2.400 / 2.316	3.012 / 3.012
Sound pressure Level [3]	Cooling (Hi)	dB(A)	47	48	50	47	52
	Heating (Hi)	dB(A)	48	50	51	47	52
Sound power Level	Cooling (Hi)	dB	63	64	66	61	66
	Heating (Hi)	dB	64	66	67	61	66
Dimensions [4]	H x W x D	mm	540 x 780 x 289	540 x 780 x 289	540 x 780 x 289	750 x 875 x 345	795 x 875 x 320
Net weight		kg	24	28	36	48	65
Piping connections	Liquid pipe	inch (mm)	1/4" (6,35)	1/4" (6,35)	1/4" (6,35)	1/4" (6,35)	1/4" (6,35)
	Gas pipe	inch (mm)	3/8" (9,52)	3/8" (9,52)	1/2" (12,70)	1/2" (12,70)	5/8" (15,88)
Refrigerant Loading	R410A	kg	0,85	0,970	1,00	1,15	1,70
Elevation difference (in/out) [5]	Max	m	5	5	5	15	20
Piping length	Min / Max	m	3-15	3-15	3-15	3-20	3-30
Piping length without refrigerant increase	Max	m	7,5	7,5	7,5	10	10
Additional gas		g/m	20	20	20	20	30
Operating range [3]	Cooling Min / Max	°C	+5 / +43	+5 / +43	+5 / +43	+5 / +43	+16 / +43
	Heating Min / Max	°C	-5 / +24	-5 / +24	-5 / +24	-5 / +24	-5 / +24

Specifications subject to change without notice

TECHNICAL FOCUS

- COMPLETE LINE-UP OF STANDARD INVERTER MODELS
- QUIETER INDOOR UNITS
- HIGH ENERGY SAVINGS
- REFRESHING AIRFLOW WITH RELAXING BREEZE EFFECT
- LONG CONNECTION DISTANCE (FROM 15 M UP TO 30 M)

CS-RE18JKE-1 // CS-RE24JKE-1

GLOBAL REMARKS	Rating conditions	Cooling	Heating
	Inside air temperature	27ºC DB / 19ºC WB	20ºC DB
	Outside air temperature	35ºC DB / 24ºC WB	7ºC DB / 6ºC WB

DB: Dry Bulb; WB: Wet Bulb
This model is not suitable to use in heating mode below -5ºC with continuous operation (24h operation).
Connectivity restriction: JKE units are not compatible with JKE-1 units.

1) EER and COP classification is at 230 V in accordance with EU directive 2002/31/EC.
2) The annual consumption is calculated by multiplying the input power at 230 V by an avarage of 500 hours per year in cooling mode.
3) The Sound pressure level of the units shows the value measured of a position 1 meter in front of the main body and 0,8 meters below the unit. The sound pressure is measured in accordance with Eurovent 4/C/006-97 specification.
4) Add 70 mm for piping port.
5) When installing the outdoor unit at a higher position than the indoor unit.

KIT-RE9-JKE-1 // KIT-RE12-JKE-1 // KIT-RE15-JKE-1 // KIT-RE18-JKE-1 // KIT-RE24-JKE-1

HEALTHY AIR
- New generation Alleru-buster anti allergic filter
- Odour-removing function
- Anti-mould filter

ENERGY, EFFICIENCY AND ECOLOGY
- Inverter system
- R410A refrigerant gas

COMFORT
- Refreshing airflow with relaxing breeze effect (only for RE9, RE12 and RE15)
- Super Quiet mode (only for RE9, RE12 and RE15)
- Powerful mode (only for RE9 and RE12 and RE15)
- Automatic vertical airflow control
- Hot start mode
- Automatic restart
- Simple change over

EASE OF USE
- 12-hr timer (only for RE9, RE12 and RE15)
- 24-hr timer (only for RE18 and RE24)
- User friendly infrared remote control

EASY INSTALLATION AND MAINTENANCE
- 15 m maximum connection distance (20 m for RE18 and 30 m for RE24)
- Removable, washable panel
- Maintenance access through the top panel of the outdoor unit
- Self-diagnosis function

CU-RE9JKE-1 CU-RE12JKE-1

CU-RE15JKE-1

CU-RE18JKE-1

CU-RE24JKE-1

A class energy saving INVERTER+

WALL MOUNTED TYPE // INVERTER+ // -15ºC

Complete line-up of air purifying systems with high efficiency even at -15ºC! This wall-mounted air conditioning is especially designed for professional applications such as computer rooms where cooling inside the room is necessary even when the outside temperature is low. Furthermore this air conditioner has an automatic changeover system, in order to maintain the inside temperature even when sharp outside temperature changes occur.

ion generator ion | prevention allergy filter ALLERU-BUSTER | silent air 23 dB SUPER QUIET | down to -15ºC in heating mode OUTDOOR TEMPERATURE | down to -15ºC in cooling mode OUTDOOR TEMPERATURE

FOR E9

CS-E9HKEA // CS-E12HKEA // CS-E15HKEA

INCLUDED WITH THE INDOOR UNIT

KIT			KIT-E9-HKEA	KIT-E12-HKEA	KIT-E15-HKEA	KIT-E18-HKEA	KIT-E21-HKEA
Indoor			CS-E9HKEA	CS-E12HKEA	CS-E15HKEA	CS-E18HKEA	CS-E21HKEA
Outdoor			CU-E9HKEA	CU-E12HKEA	CU-E15HKEA	CU-E18HKEA	CU-E21HKEA
Cooling capacity	Nominal (Min - Max)	kW	2,60 (0,60-3,00)	3,50 (0,60-4,00)	4,40 (0,90-5,00)	5,30 (0,90-6,00)	6,30 (0,90-7,10)
	Nominal (Min - Max)	kCal/h	2.240 (690-2.580)	3.010 (690-3.440)	3.780 (690-4.300)	4.560 (770-5.160)	5.420 (770-6.110)
EER [1]	Nominal (Min - Max)	Energy Saving	4,41 (5,00-4,00) A	3,80 (5,00-3,39) A	3,21 (4,19-3,13) A	3,21 (4,19-2,93) A	2,85 (4,19-2,8) C
Power input Cooling	Nominal (Min - Max)	kW	0,59 (0,12-0,75)	0,92 (0,12-1,18)	1,37 (0,215-1,6)	1,65 (0,215-2,05)	2,21 (0,215-2,54)
Heating capacity	Nominal (Min - Max)	kW	3,60 (0,60-5,40)	4,80 (0,60-6,60)	5,50 (0,90-7,10)	6,60 (0,90-8,00)	7,20 (0,90-8,50)
	Nominal (Min - Max)	kCal/h	3.100 (520-4.640)	4.130 (520-5.680)	4.730 (770-6.110)	5.680 (770-6.880)	6.190 (770-7.310)
Heating capacity at -7°C	Nominal	kW	3,13	3,86	3,98	4,98	5,24
COP [1]	Nominal (Min - Max)	Energy Saving	4,26 (5,22-3,97) A	3,81 (5,22-3,57) A	3,50 (3,67-3,16) B	3,69 (3,67-3,02) A	3,43 (3,67-3,09) B
Power input Heating	Nominal (Min - Max)	kW	0,845 (0,115-1,36)	1,26 (0,115-1,85)	1,57 (0,245-2,25)	1,79 (0,245-2,65)	2,10 (0,245-2,75)
Annual Energy Consumption [2]		kWh	295	460	685	825	1.105
INDOOR UNIT							
Power source		V	230	230	230	230	230
Connection		mm²	4 x 1,5	4 x 1,5	4 x 1,5	4 x 2,5	4 x 2,5
Current Cooling	Nominal	A	2,9	4,3	6,3	7,5	9,9
Current Heating	Nominal	A	4,0	5,8	7,1	8,1	9,3
Max. current		A	6,4	8,4	10,2	11,9	12,6
Air Volume	Cooling / Heating	m³/h	576 / 630	642 / 672	660 / 708	912 / 1.002	972 / 1.038
Moisture removal volume		l/h	1,6	2,0	2,4	2,9	3,5
Sound pressure Level [3]	Cooling (Hi / Lo / S-Lo)	dB(A)	39 / 26 / 23	42 / 29 / 26	43 / 32 / 29	44 / 37 / 34	45 / 37 / 34
	Heating (Hi / Lo / S-Lo)	dB(A)	40 / 27 / 24	42 / 33 / 30	43 / 35 / 32	44 / 37 / 34	45 / 37 / 34
Sound power Level	Cooling (Hi)	dB	50	53	54	57	58
	Heating (Hi)	dB	51	53	54	57	58
Dimensions	H x W x D	mm	280 x 799 x 183	280 x 799 x 183	280 x 799 x 183	275 x 998 x 230	275 x 998 x 230
Net weight		kg	9	9	9	11	11
Air purifier filter			Alleru-buster filter + Ion	Alleru-buster filter + Ion	Alleru-buster filter + Ion	Alleru-buster filter + Ion	Alleru-buster filter + Ion
OUTDOOR UNIT							
Air Volume	Cooling / Heating	m³/h	1.788 / 1.788	1.860 / 1.860	2.910 / 2.808	2.400 / 2.400	2.568/ 2.490
Sound pressure Level [3]	Cooling (Hi)	dB(A)	46	48	46	47	48
	Heating (Hi)	dB(A)	47	50	46	47	49
Sound power Level	Cooling (Hi)	dB	59	61	59	60	61
	Heating (Hi)	dB	60	63	59	60	62
Dimensions [4]	H x W x D	mm	540 x 780 x 289	540 x 780 x 289	750 x 875 x 345	750 x 875 x 345	750 x 875 x 345
Net weight		kg	35	35	48	49	51
Piping connections	Liquid pipe	inch (mm)	1/4" (6,35)	1/4" (6,35)	1/4" (6,35)	1/4" (6,35)	1/4" (6,35)
	Gas pipe	inch (mm)	3/8" (9,52)	1/2" (12,70)	1/2" (12,70)	1/2" (12,70)	1/2" (12,70)
Refrigerant Loading	R410A	kg	0,930	0,970	1,060	1,18	1,29
Elevation difference (in/out) [5]	Max	m	5	5	5	15	15
Piping length	Min / Max	m	3-15	3-15	3-15	3-20	3-20
Piping length without refrigerant increase	Max	m	7,5	7,5	7,5	10	10
Additional gas		g/m	20	20	20	20	20
Operating range [3]	Cooling Min / Max	°C	-15 / +43	-15 / +43	-15 / +43	-15 / +43	-15 / +43
	Heating Min / Max	°C	-10 / +24	-10 / +24	-15 / +24	-15 / +24	-15 / +24

TECHNICAL FOCUS

- HIGHLY EFFICIENT HEAT PUMP AND COOLING EVEN AT -15ºC
- SUPERSONIC AIR PURIFYING SYSTEM WITH ALLERU-BUSTER ANTI ALLERGIC FILTER
- SUPER QUIET! ONLY 23DB (ONLY FOR E9)
- MORE POWERFUL AIRFLOW TO QUICKLY REACH THE DESIRED TEMPERATURE
- MAXIMUM CONNECTION DISTANCE 15 M (E9, 12, 15), 20M (E18, 21)

CS-E18HKEA // CS-E21HKEA

GLOBAL REMARKS

Rating conditions	Cooling	Heating
Inside air temperature	27ºC DB / 19ºC WB	20ºC DB
Outside air temperature	35ºC DB / 24ºC WB	7ºC DB / 6ºC WB

DB: Dry Bulb; WB: Wet Bulb
This model is not suitable to use in heating mode below -5ºC with continuous operation (24h operation).
Connectivity restriction: JKE units are not compatible with MKE units.

1) EER and COP classification is at 230 V in accordance with EU directive 2002/31/EC.
2) The annual consumption is calculated by multiplying the input power at 230 V by an avarage of 500 hours per year in cooling mode.
3) The Sound pressure level of the units shows the value measured of a position 1 meter in front of the main body and 0,8 meters below the unit. The sound pressure is measured in accordance with Eurovent 6/C/006-97 specification.
4) Add 70 mm for piping port.
5) When installing the outdoor unit at a higher position than the indoor unit.

KIT-E9-HKEA // KIT-E12-HKEA // KIT-E15-HKEA // KIT-E18-HKEA // KIT-E21-HKEA

HEALTHY AIR
- Refreshing ion generator boosts well-being
- Alleru-buster anti allergic filter
- Soft dry operation mode

ENERGY EFFICIENCY AND ECOLOGY
- Maximum efficiency Inverter system
- R410A refrigerant gas

COMFORT
- Operates in cold/hot mode in temperatures as low as -15ºC (E9, 12: -10 °C)
- Automatically changes from cold to hot depending on inside temperature
- Super Quiet mode
- Powerful mode
- Uniform dispersion of airflow
- Automatic vertical and horizontal airflow control
- Hot start mode
- Automatic restart

EASE OF USE
- 24-hr timer
- User friendly infrared remote control

EASY INSTALLATION AND MAINTENANCE
- Removable, washable panel
- Maximum connection distance 15 m (E9, 12, 15), 20m (E18, 21)
- Maintenance access through the top panel of the outdoor unit
- Self-diagnosis function
- Soft dry operation mode

CU-E9HKEA
CU-E12HKEA

CU-E15HKEA CU-E21HKEA
CU-E18HKEA

prevention allergy filter
ALLERU-BUSTER

WALL-MOUNTED TYPE // STANDARD HEAT PUMP

Powerful heat pump non-Inverter air conditioning. A class efficiency for high savings.

FOR PW9 AND PW12. INCLUDED WITH THE INDOOR UNIT

FOR PW18 AND PW24. INCLUDED WITH THE INDOOR UNIT

KIT			KIT-PW9-GKE	KIT-PW12-GKE	KIT-PW18-GKE	KIT-PW24-JKE
Indoor			CS-PW9GKE	CS-PW12GKE	CS-PW18GKE	CS-PW24JKE
Outdoor			CU-PW9GKE	CU-PW12GKE	CU-PW18GKE	CU-PW24JKE
Cooling capacity	Nominal	kW	2,65	3,4	5,10	7,03
		kCal/h	2.280	2.920	4.386	6.046
EER [1]	Nominal	Energy Saving	3,22 A	3,22 A	2,91 C	2,53 E
Power input Cooling	Nominal	kW	0,825	1,055	1,75	2,78
Heating capacity	Nominal	kW	2,85	3,8	5,30	7,50
		kCal/h	2.450	3.260	4.560	6.450
COP [1]	Nominal	Energy Saving	3,63 A	3,61 A	3,35 C	2,87 D
Power input Heating	Nominal	kW	0,785	1,05	1,58	2,61
Annual Energy Consumption [2]		kWh	413	528	875	1.390
INDOOR UNIT						
Power source		V	230	230	230	230
Connection		mm²	4 x 1,5	4 x 1,5	4 x 1,5	4 x 2,5
Current Cooling	Nominal	A	3,9	5,0	7,7	13,1
Current Heating	Nominal	A	3,7	4,9	6,9	12,5
Air Volume	Cooling / Heating	m³/h	618 / 618	540 / 552	972 / 984	1.044 / 1.092
Moisture removal volume		l/h	1,6	1,9	2,9	4,0
Sound pressure level [3]	Cooling (Hi / Lo / S-Lo)	dB(A)	39 / 31	39 / 32	45 / 38	47 / 41
	Heating (Hi / Lo / S-Lo)	dB(A)	29 / 38	39 / 31	43 / 38	46 / 41
Sound power level	Cooling (Hi)	dB	50	50	58	59
	Heating (Hi)	dB	50	50	56	57
Dimensions	H x W x D	mm	250 x 770 x 205	280 x 799 x 183	275 x 998 x 230	275 x 998 x 230
Net weight		kg	7,5	9	11	11
Air purifier filter	Optional		CZ-SA14P Alleru-buster filter	CZ-SA14P Alleru-buster filter	CZ-SA14P Alleru-buster filter	CZ-SA14P Alleru-buster filter
OUTDOOR UNIT						
Air Volume	Cooling / Heating	m³/h	630	672	1.740	3.102
Sound pressure level [3]	Cooling (Hi)	dB(A)	48	49	55	54
	Heating (Hi)	dB(A)	49	50	55	55
Sound power level	Cooling (Hi)	dB	61	62	70	69
	Heating (Hi)	dB	62	63	70	70
Dimensions [4]	H x W x D	mm	530 x 650 x 230	540 x 780 x 289	540 x 780 x 289	750 x 875 x 345
Net weight		kg	27	30	44	63
Piping connections	Liquid pipe	inch (mm)	1/4" (6,35)	1/4" (6,35)	1/4" (6,35)	1/4" (6,35)
	Gas pipe	inch (mm)	3/8" (9,52)	3/8" (9,52)	1/2" (12,70)	5/8" (15,88)
Refrigerant Loading	R410A	kg	0,80	0,98	1,33	1,82
Elevation difference (in/out) [5]	Max	m	5	5	20	20
Piping length	Min / Max	m	3 / 10	3 / 15	3 / 25	3 / 25
Piping length without refrigerant increase	Max	m	7,5	7,5	7,5	7,5
Additional gas		g/m	20	20	20	30
Operating range [3]	Cooling Min / Max	ºC	21 / 43	21 / 43	16 / 43	16 / 43
	Heating Min / Max	ºC	-5 / 24	-5 / 24	-5 / 24	-5 / 24

Specifications subject to change without notice

TECHNICAL FOCUS

- QUIET MODE FOR IMPROVED COMFORT
- ODOUR REMOVING FUNCTION
- EASY TO INSTALL
- R410A REFRIGERANT GAS
- MANUAL AND AUTOMATIC AIRFLOW CONTROL

CS-PW18GKE // CS-PW24JKE

GLOBAL REMARKS	Rating conditions	Cooling	Heating
	Inside air temperature	27ºC DB / 19ºC WB	20ºC DB
	Outside air temperature	35ºC DB / 24ºC WB	7ºC DB / 6ºC WB

DB: Dry Bulb; WB: Wet Bulb
This model is not suitable to use in heating mode below -5ºC with continuous operation (24h operation).

1) EER and COP classification is at 230 V in accordance with EU directive 2002/31/EC.
2) The annual consumption is calculated by multiplying the input power at 230 V by an avarage of 500 hours per year in cooling mode.
3) The Sound pressure level of the units shows the value measured of a position 1 meter in front of the main body and 0,8 meters below the unit. The sound pressure is measured in accordance with Eurovent 6/C/006-97 specification.
4) Add 70 mm for piping port.
5) When installing the outdoor unit at a higher position than the indoor unit.

KIT-PW9-GKE // KIT-PW12-GKE // KIT-PW18-GKE // KIT-PW24-JKE

HEALTHY AIR
- Soft dry operation mode
- Odour-removing function
- CZ-SA14P Alleru-buster anti allergic filter (optional)

ENERGY EFFICIENCY AND ECOLOGY
- R410A refrigerant gas

COMFORT
- Manual horizontal airflow control
- Automatic vertical airflow control
- Hot start mode
- Automatic restart

EASE OF USE
- 12-hr timer (For PW9 and PW12)
- 24-hr timer (For PW18 and PW24)
- User friendly infrared remote control

EASY INSTALLATION AND MAINTENANCE
- Removable, washable panel
- Maintenance access through the top panel of the outdoor unit

CU-PW9GKE

CU-PW12GKE

CU-PW18GKE

CU-PW24JKE

prevention allergy filter
ALLERU-BUSTER

WALL-MOUNTED TYPE // STANDARD COOLING ONLY

Full line-up of cooling wall-mounted non-Inverter types. Super quiet and with high efficiency
(A class from V7 to V18)

ion generator
ion

CS-V7DKE // CS-V9DKE // CS-V12DKE

FOR V7, V9 AND V12. INCLUDED WITH THE INDOOR UNIT

FOR V18, V24 AND V28. INCLUDED WITH THE INDOOR UNIT

KIT			KIT-V7-DKE	KIT-V9-DKE	KIT-V12-DKE	KIT-V18-DKE	KIT-V24-DKE	KIT-V28-EKE
Indoor			**CS-V7DKE**	**CS-V9DKE**	**CS-V12DKE**	**CS-V18DKE**	**CS-V24DKE**	**CS-V28EKE**
Outdoor			**CU-V7DKE**	**CU-V9DKE**	**CU-V12DKE**	**CU-V18DKE**	**CU-V24DKE**	**CU-V28EKE**
Cooling capacity	Nominal	kW	2,40	3,00	3,68	5,30	7,03	7,91
		kCal/h	2.064	2.580	3.165	4.558	6.046	6.803
EER [1]	**Nominal**	**Energy Saving**	**3,24 A**	**3,21 A**	**3,23 A**	**3,25 A**	**2,70 A**	**3,22 A**
Power input Cooling	Nominal	kW	0,740	0,935	1,140	1,630	2,600	2,460
Annual Energy Consumption [2]		kWh	370	470	570	815	1.300	1.230
INDOOR UNIT								
Power source		V	230	230	230	230	230	230
Connection		mm²	4 x 1,5	4 x 1,5	4 x 1,5	4 x 2,5	4 x 2,5	4 x 2,5
Current Cooling	Nominal	A	3,4	4,2	5,3	7,3	12,3	11,3
Air Volume		m³/h	468	510	570	888	1.014	1.206
Moisture removal volume		l/h	1,5	1,7	2,1	2,9	4,0	4,6
Sound pressure level [3]	Hi / Lo / S-Lo	dB(A)	33 / 26 / 24	35 / 26 / 24	39 / 29 / 27	42 / 37 / 35	46 / 40 / 38	49 / 44 / 42
Sound power level	Hi	dB	46	48	52	54	59	62
Dimensions	H x W x D	mm	280 x 799 x 183	280 x 799 x 183	280 x 799 x 183	275 x 998 x 230	275 x 998 x 230	340 x 1.150 x 260
Net weight		kg	9	9	9	11	11	18
Air purifier filter			Alleru-buster filter + Ion	Alleru-buster filter + Ion	Alleru-buster filter + Ion	Alleru-buster filter + Ion	Alleru-buster filter + Ion	Alleru-buster filter+ Ion
OUTDOOR UNIT								
Air Volume		m³/h	1.560	1.980	1.848	.520	2.790	3.180
Sound pressure level [3]	Hi	dB(A)	46	48	49	54	54	55
Sound power level	Hi	dB	61	63	64	69	69	70
Dimensions [4]	H x W x D	mm	510 x 650 x 230	540 x 780 x 289	540 x 780 x 289	750 x 875 x 345	750 x 875 x 345	750 x 875 x 345
Net weight		kg	25	31	33	50	59	62
Piping connections	Liquid pipe	inch (mm)	1/4" (6,35)	1/4" (6,35)	1/4" (6,35)	1/4" (6,35)	1/4" (6,35)	1/4" (6,35)
	Gas pipe	inch (mm)	3/8" (9,52)	3/8" (9,52)	1/2" (12,70)	1/2" (12,70)	5/8" (15,88)	5/8" (15,88)
Refrigerant Loading	R410A	kg	0,89	0,93	1,05	1,34	1,47	1,9
Elevation difference (in/out) [5]	Max	m	5	5	5	20	20	20
Piping length	Min / Max	m	3 / 10	3 / 10	3 / 15	3 / 25	3 / 25	3 / 30
Piping length without refrigerant increase	Max	m	7,5	7,5	7,5	7,5	7,5	7,5
Additional gas		g/m	10	10	15	20	30	30
Operating range [3]	Min / Max	ºC	16 / 43	16 / 43	16 / 43	16 / 43	16 / 43	16 / 43

Specifications subject to change without notice

TECHNICAL FOCUS

- SUPER QUIET MODE FOR INCREASED COMFORT
- POWERFUL MODE FOR QUICK TEMPERATURE SETTING
- EASY TO INSTALL
- R410A REFRIGERANT GAS
- MANUAL AND AUTOMATIC AIRFLOW CONTROL

CS-V18DKE // CS-V24DKE

CS-V28EKE

GLOBAL REMARKS

Rating conditions	Cooling	Heating
Inside air temperature	27ºC DB / 19ºC WB	20ºC DB
Outside air temperature	35ºC DB / 24ºC WB	7ºC DB / 6ºC WB

DB: Dry Bulb; WB: Wet Bulb
This model is not suitable to use in heating mode below -5ºC with continuous operation (24h operation)

1) EER classification is at 230 V in accordance with EU directive 2002/31/EC.
2) The annual consumption is calculated by multiplying the input power at 230 V by an avarage of 500 hours per year in cooling mode.
3) The Sound pressure level of the units shows the value measured of a position 1 meter in front of the main body and 0,8 meters below the unit. The sound pressure is measured in accordance with Eurovent 6/C/006-97 specification.
4) Add 70 mm for piping port.
5) When installing the outdoor unit at a higher position than the indoor unit.

KIT-V7-DKE // KIT-V9-DKE // KIT-V12-DKE // KIT-V18-DKE // KIT-V24-DKE // KIT-V28-EKE

HEALTHY AIR
- CZ-SA14P Supersonic air purifying system with Alleru-buster anti allergic filter

ENERGY EFFICIENCY AND ECOLOGY
- R410A refrigerant gas

COMFORT
- Super Quiet mode
- Powerful mode
- Manual horizontal airflow control
- Automatic vertical airflow control
- Automatic restart

EASE OF USE
- 24-hr timer
- User friendly infrared remote control

EASY INSTALLATION AND MAINTENANCE
- Removable, washable panel
- Maintenance access through the top panel of the outdoor unit

CU-V7DKE CU-V12DKE
CU-V9DKE

CU-V18DKE CU-V28EKE
CU-V24DKE

A class energy saving INVERTER+

FLOOR CONSOLE TYPE // INVERTER+

Console for discreet integration on walls, and for high performances, specifically in heat mode even when the outside temperature is as low as -15ºC.
Double airflow for improved comfort and temperature dispersion: through the top for an efficient cooling mode, through the bottom for quick heating.

silent air 23 dB SUPER QUIET

down to -15ºC in heating mode OUTDOOR TEMPERATURE

INCLUDED WITH THE INDOOR UNIT

KIT			KIT-E9-GFEW-1	KIT-E12-GFEW-1	KIT-E18-GFEW-1
Indoor			**CS-E9GFEW**	**CS-E12GFEW**	**CS-E18GFEW**
Outdoor			**CU-E9GFE-1**	**CU-E12GFE-1**	**CU-E18GFE-1**
Cooling capacity	Nominal (Min - Max)	kW	2,50 (0,80 - 3,00)	3,50 (0,80 - 3,80)	5,00 (0,90 - 5,60)
		kCal/h	2.150 (690 - 2.580)	3.010 (690 - 3.270)	3.780 (770 - 4.300)
EER [1]	**Nominal (Min - Max)**	**Energy Saving**	**4,39 (4,57 - 3,85) A**	**3,63 (4,32 - 3,33) A**	**3,23 (4,57 - 2,93) A**
Power input Cooling	Nominal (Min - Max)	kW	0,57 (0,17 - 0,78)	0,97 (0,18 - 1,14)	1,55 (0,25 - 1,91)
Heating capacity	Nominal (Min - Max)	kW	3,60 (0,80 - 5,00)	4,80 (0,80 - 6,10)	5,80 (0,90 - 7,10)
		kCal/h	3.100 (690 - 4.300)	4.130 (690 - 5.250)	4.730 (770 - 6.110)
COP [1]	**Nominal (Min - Max)**	**Energy Saving**	**4,16 (4,85 - 3,68) A**	**3,64 (4.57 - 3,45) A**	**3,63 (3,46 - 3,02) A**
Power input Heating	Nominal (Min - Max)	kW	0,865 (0,16 - 1,36)	1,320 (0,17 - 1,77)	1,600 (0,26 - 2,35)
Annual Energy Consumption [2]		kWh	285	483	775
INDOOR UNIT					
Air Volume	Cooling / Heating	m³/h	558 / 576	570 / 600	660 / 780
Moisture removal volume		l/h	1,4	2,0	2,8
Sound pressure level [3]	Cooling (Hi / Lo / S-Lo)	dB(A)	38 / 27 / 23	39 / 28 / 24	44 / 36 / 32
	Heating (Hi / Lo / S-Lo)	dB(A)	38 / 27 / 23	39 / 27 / 23	44 / 36 / 32
Sound power level	Cooling (Hi)	dB	54	55	60
	Heating (Hi)	dB	54	55	61
Dimensions	H x W x D	mm	600 x 700 x 210	600 x 700 x 210	600 x 700 x 210
Net weight		kg	14	14	14
OUTDOOR UNIT					
Power source		V	230	230	230
Connection		mm²	4 x 1,5	4 x 1,5	4 x 1,5
Current Cooling		A	2,7	4,4	7,0
Current Heating		A	4,05	6,00	7,1
Air Volume	Cooling / Heating	m³/h	1.788 / 1.788	1.860 / 1.860	2.400 / 2.400
Sound pressure level [3]	Cooling (Hi)	dB(A)	46	48	47
	Heating (Hi)	dB(A)	47	50	48
Sound power level	Cooling (Hi)	dB	59	61	60
	Heating (Hi)	dB	60	63	61
Dimensions [4]	H x W x D	mm	540 x 780 x 289	540 x 780 x 289	750 x 875 x 345
Net weight		kg	34	34	49
Piping connections	Liquid pipe	inch (mm)	1/4" (6,35)	1/4" (6,35)	1/4" (6,35)
	Gas pipe	inch (mm)	3/8" (9,52)	3/8" (9,52)	1/2" (12,70)
Refrigerant Loading	R410A	kg	0,965	0,980	1,060
Elevation difference (in/out) [5]	Max	m	5	5	15
Piping length	Min / Max	m	3 / 15	3 / 15	3 / 20
Piping length without refrigerant increase	Max	m	7,5	7,5	10
Additional gas		g/m	20	20	20
Operating range [3]	Cooling Min / Max	ºC	16 / 43	16 / 43	16 / 43
	Heating Min / Max	ºC	-15 / 24	-15 / 24	-15 / 24

Specifications subject to change without notice

TECHNICAL FOCUS

- MORE EFFICIENT THAN EVER FOR LESS CONSUMPTION AND HIGHER SAVINGS
- HEATING MODE DOWN TO -15ºC WITH HIGH EFFICIENCY
- DOUBLE AIRFLOW FOR BETTER EFFICIENCY
- POWERFUL MODE FOR QUICK TEMPERATURE SETTING
- R410A REFRIGERANT GAS

GLOBAL REMARKS

Rating conditions	Cooling	Heating
Inside air temperature	27ºC DB / 19ºC WB	20ºC DB
Outside air temperature	35ºC DB / 24ºC WB	7ºC DB / 6ºC WB

DB: Dry Bulb; WB: Wet Bulb
This model is not suitable to use in heating mode below -5ºC with continuous operation (24h operation).
Connectivity restriction: JKE units are not compatible with MKE units.

1) EER and COP classification is at 230 V in accordance with EU directive 2002/31/EC.
2) The annual consumption is calculated by multiplying the input power at 230 V by an avarage of 500 hours per year in cooling mode.
3) The Sound pressure level of the units shows the value measured of a position 1 meter in front of the main body and 1 m height in front of the unit. The sound pressure is measured in accordance with Eurovent 6/C/006-97 specification.
4) Add 70 mm for piping port.
5) When installing the outdoor unit at a higher position than the indoor unit.

KIT-E9-GFEW-1 // KIT-E12-GFEW-1 // KIT-E18-GFEW-1

HEALTHY AIR
- Soft dry operation mode
- Odour-removing function

ENERGY EFFICIENCY AND ECOLOGY
- Maximum efficiency Inverter system
- R410A refrigerant gas

COMFORT
- Super Quiet mode
- Powerful mode
- Automatic vertical airflow control
- Hot start mode
- Automatic restart

EASE OF USE
- 24-hr timer
- User friendly infrared remote control

EASY INSTALLATION AND MAINTENANCE
- Removable, washable panel
- Maximum connection distance 15 m (E9, 12), 20m (E18)
- Maintenance access through the top panel of the outdoor unit
- Self-diagnosis function

CU-E9GFE-1
CU-E12GFE-1

CU-E18GFE-1

A class energy saving INVERTER

SINGLE SPLIT FLOOR OR CEILING TYPE // INVERTER

Versatile Floor or Ceiling air conditioning Inverter type. Ideal for restaurants or offices where powerful and efficient air-conditioning is needed.

prevention allergy filter ALLERU-BUSTER

OPTIONAL

INCLUDED WITH THE INDOOR UNIT

KIT			KIT-E15-DTE	KIT-E18-DTE	KIT-E21-DTE
Indoor			**CS-E15DTEW**	**CS-E18DTEW**	**CS-E21DTES**
Outdoor			**CU-E15DBE**	**CU-E18DBE**	**CU-E21DBE**
Cooling capacity	Nominal (Min - Max)	kW	4,15 (0,90 - 4,55)	5,00 (0,90 - 5,40)	5,80 (0,90 - 6,60)
		kCal/h	3.570 (770 - 3.910)	4.300 (770 - 4.640)	4.990 (770 - 5.680)
EER [1]	**Nominal (Min - Max)**	**Energy Saving**	**3,22 A**	**3,01 B**	**3,01 B**
Power input Cooling	Nominal (Min - Max)	kW	1,29 (0,255 - 1,550)	1,66 (0,255 - 1,890)	1,93 (0,255 - 2,240)
Heating capacity	Nominal (Min - Max)	kW	5,17 (0,90 - 6,30)	6,10 (0,90 - 7,60)	6,80 (0,90 - 8,10)
		kCal/h	4.450 (770 - 5.420)	5.250 (770 - 6.540)	5.850 (770 - 6.970)
COP [1]	**Nominal (Min - Max)**	**Energy Saving**	**3,34 C**	**3,35 C**	**3,42 B**
Power input Heating	Nominal (Min - Max)	kW	1,550 (0,260 - 2,050)	1,820 (0,260 - 2,380)	1,990 (0,260 - 2,650)
Annual Energy Consumption [2]		kWh	645	830	965
INDOOR UNIT					
Air Volume	Cooling / Heating	m³/h	720 / 732	750 / 762	786 / 792
Moisture removal volume		l/h	2,4	2,8	3,2
Sound pressure level [3]	Cooling (Hi / Lo / S-Lo)	dB(A)	45 / 37 / 34	46 / 39 / 36	47 / 41 / 38
	Heating (Hi / Lo / S-Lo)	dB(A)	45 / 33 / 30	47 / 35 / 32	47 / 37 / 34
Sound power level	Cooling (Hi)	dB	58	59	60
	Heating (Hi)	dB	58	60	60
Dimensions	H x W x D	mm	540 x 1.028 x 200	540 x 1.028 x 200	540 x 1.028 x 200
Net weight		kg	17	18	20
Air purifier filter	Optional		CZ-SA14P Alleru-buster filter	CZ-SA14P Alleru-buster filter	CZ-SA14P Alleru-buster filter
OUTDOOR UNIT					
Power source		V	230	230	230
Connection		mm²	4 x 1,5	4 x 2,5	4 x 2,5
Current Cooling	Nominal	A	6,0	7,5	8,7
Current Heating	Nominal	A	7,1	8,2	9,0
Air Volume	Cooling / Heating	m³/h	2.910 / 2.910	2.400 / 2.400	2.568 / 2.490
Sound pressure level [3]	Cooling (Hi)	dB(A)	46	47	48
	Heating (Hi)	dB(A)	47	48	49
Sound power level	Cooling (Hi)	dB	59	60	61
	Heating (Hi)	dB	60	61	62
Dimensions [4]	H x W x D	mm	750 x 875 x 345	750 x 875 x 345	750 x 875 x 345
Net weight		kg	48	48	49
Piping connections	Liquid pipe	inch (mm)	1/4" (6,35)	1/4" (6,35)	1/4" (6,35)
	Gas pipe	inch (mm)	1/2" (12,70)	1/2" (12,70)	1/2" (12,70)
Refrigerant Loading	R410A	kg	1,23	1,06	1,15
Elevation difference (in/out) [5]	Max	m	15	15	15
Piping length	Min / Max	m	3 / 20	3 / 20	3 / 20
Piping length without refrigerant increase	Max	m	10	10	10
Additional gas		g/m	20	20	20
Operating range [3]	Cooling Min / Max	ºC	16 / 43	16 / 43	16 / 43
	Heating Min / Max	ºC	-5 / 24	-5 / 24	-5 / 24

Specifications subject to change without notice

TECHNICAL FOCUS

- A WIDTH OF ONLY 20CM FOR EASY INSTALLATION EVERYWHERE
- 2 INSTALLATIONS POSSIBLE: ON THE WALL OR ON THE ROOF
- POWERFUL LINE-UP, UP TO 5.8 KW!
- POWERFUL MODE FOR QUICK TEMPERATURE SETTING
- R410A REFRIGERANT GAS
- 20 M CONNECTION DISTANCE, 15 M HEIGHT DIFFERENCE ON THE WHOLE LINE-UP

GLOBAL REMARKS	Rating conditions	Cooling	Heating
	Inside air temperature	27ºC DB / 19ºC WB	20ºC DB
	Outside air temperature	35ºC DB / 24ºC WB	7ºC DB / 6ºC WB

DB: Dry Bulb; WB: Wet Bulb
This model is not suitable to use in heating mode below -5ºC with continuous operation (24h operation).
Connectivity restriction: JKE units are not compatible with MKE units.

1) EER and COP classification is at 230 V in accordance with EU directive 2002/31/EC.
2) The annual consumption is calculated by multiplying the input power at 230 V by an avarage of 500 hours per year in cooling mode.
3) The Sound pressure level of the units shows the value measured of a position 1 meter in front of the main body floor-mounted: 1 m in front of the unit at 1 m height from the floor; ceiling-mounted: 1 m infront and 80 cm below the unit. The sound pressure is measured in accordance with Eurovent 6/C/006-97 specification.
4) Add 70 mm for piping port.
5) When installing the outdoor unit at a higher position than the indoor unit.

KIT-E15-DTE // KIT-E18-DTE // KIT-E21-DTE

HEALTHY AIR
- Soft dry operation mode
- Odour-removing function
- CZ-SA14P Alleru-buster anti allergic filter (optional)
- Anti-mould filter

ENERGY EFFICIENCY AND ECOLOGY
- Inverter system
- R410A refrigerant gas

COMFORT
- Super Quiet mode
- Powerful mode
- Automatic vertical airflow control
- Hot start mode
- Automatic restart

EASE OF USE
- 24-hr timer
- User friendly infrared remote control

EASY INSTALLATION AND MAINTENANCE
- Maximum connection distance 20m
- Maintenance access through the top panel of the outdoor unit
- Self-diagnosis function

CU-E15DBE CU-E21DBE
CU-E18DBE

A class energy saving INVERTER+

ETHEREA MULTI SPLIT 2X1 // INVERTER+

WITH THE MULTI SYSTEM, SAVE MORE THAN WITH THE 1X1!

ECONAVI's sensor technology uses factors such as speed, frequency and temperature to determine the human activity level in the room for maximum comfort and maximum savings. With ECONAVI, you can save up to 30%. Cool and stylish, the distinctive, beautiful rounded form is designed to complement today's modern interiors. Etherea has an advanced air purifying system with the new Patrol Sensor to detect and eliminate contaminants. Using a Multi Split 2X1 Inverter+ system with the outdoor unit CU-2E15LBE instead of 2 individual mono split Inverter+ systems, you reduce consumption and thus save more! Up to 10%! Furthermore, using a Multi Split system, you save space on the outdoor unit, making it easier to install in small spaces. The multi system also has a greater difference in elevation and longer tubing, leading to greater flexibility on roof installations.

30% savings ECONAVI | improved comfort AUTOCOMFORT | quality air control 24 h PATROL SENSOR | pure air system e-ION PLUS | down to -15°C in heating mode OUTDOOR TEMPERATURE

NEW 2011

ETHEREA

CS-XE7MKEW // CS-XE9MKEW // CS-XE12MKEW

INCLUDED WITH THE INDOOR UNIT

SILVER KIT			KIT-2XE77-MBE	KIT-2XE79-MBE	KIT-2XE712-MBE	KIT-2XE99-MBE
Indoor			CS-XE7MKEW	CS-XE7MKEW	CS-XE7MKEW	CS-XE9MKEW
			CS-XE7MKEW	CS-XE9MKEW	CS-XE12MKEW	CS-XE9MKEW
WHITE KIT			**KIT-2E77-MBE**	**KIT-2E79-MBE**	**KIT-2E712-MBE**	**KIT-2E99-MBE**
Indoor			CS-E7MKEW	CS-E7MKEW	CS-E7MKEW	CS-E9MKEW
			CS-E7MKEW	CS-E9MKEW	CS-E12MKEW	CS-E9MKEW
Outdoor			CU-2E15LBE	CU-2E15LBE	CU-2E15LBE	CU-2E15LBE
Cooling capacity	Nominal (Min - Max)	kW	4,00 (1,50 - 5,00)	4,50 (1,50 - 5,20)	4,50 (1,50 - 5,20)	4,50 (1,50 - 5,20)
	Nominal (Min - Max)	kCal/h	3.440 (1.290 - 4.300)	3.870 (1.290 - 4.470)	3.870 (1.290 - 4.470)	3.870 (1.290 - 4.470)
EER 1)	**Nominal (Min - Max)**	**Energy Saving**	**3,66 (6,00 - 3,70) A**	**3,66 (6,00 - 3,70) A**	**3,66 (6,00 - 3,42) A**	**3,66 (6,00 - 3,42) A**
Power input Cooling	Nominal (Min - Max)	kW	1,09 (0,25 - 1,35)	1,23 (0,25 - 1,52)	1,23 (0,25 - 1,53)	1,23 (0,25 - 1,52)
Heating capacity	Nominal (Min - Max)	kW	5,40 (1,10 - 7,00)	5,40 (1,10 - 7,00)	5,40 (1,10 - 7,0)	5,40 (1,10 - 7,0)
	Nominal (Min - Max)	kCal/h	4.640 (950 - 6.020)	4.640 (950 - 6.020)	4.640 (950 - 6.020)	4.640 (950 - 6.020)
COP 1)	**Nominal (Min - Max)**	**Energy Saving**	**4,62 (5,24 - 4,19) A**	**4,62 (5,24 - 4,19) A**	**4,62 (5,24 - 4,19) A**	**4,62 (4,61 - 4,19) A**
Power input Heating	Nominal (Min - Max)	kW	1,17 (0,21 - 1,67)	1,17 (0,21 - 1,67)	1,17 (0,21 - 1,67)	1,17 (0,21 - 1,67)
Annual Energy Consumption 2)		kWh	545	615	615	615
INDOOR UNIT						
Air Volume	Cooling	m^3/h	606	606 (E7) / 606 (E9)	606 (E7) / 654 (E12)	606
Moisture removal volume		U/h	1,3 / 1,3	1,3 (E7) / 1,5 (E12)	1,1 (E7) / 1,6 (E12)	1,5 / 1,5
Sound pressure Level 3)	Cooling and Heating (S-Lo)	dB(A)	26	26	26 (E7) / 29 (E12)	26
Sound power Level	Cooling and Heating (Hi)	dB	56	56	56 (E7) / 60 (E12)	56
Dimensions	H x W x D	mm	290 x 870 x 204	290 x 870 x 204	290 x 870 x 204	290 x 870 x 204
Net weight		kg	9	9	9	9
Air purifier filter			Patrol + E-ion	Patrol + E-ion	Patrol + E-ion	Patrol + E-ion
OUTDOOR UNIT						
Power source		V	230	230	230	230
Connection		mm^2	4 x 1,5	4 x 1,5	4 x 1,5	4 x 1,5
Current	Cooling / Heating Nominal	A	5,10 / 5,20	5,75 / 5,20	5,75 / 5,20	5,75 / 5,20
Air Volume	Cooling / Heating	m^3/h	1.998 / 1.710	1.998 / 1.710	1.998 / 1.710	1.998 / 1.710
Sound pressure Level 3)	Cooling / Heating (Hi)	dB(A)	47 / 49	47 / 49	47 / 49	47 / 49
Sound power Level	Cooling / Heating (Hi)	dB	62 / 64	62 / 64	62 / 64	62 / 64
Dimensions 4)	H x W x D	mm	540 x 780 (+70) x 289	540 x 780 (+70) x 289	540 x 780 (+70) x 289	540 x 780 (+70) x 289
Net weight		kg	38	38	38	38
Piping connections	Liquid pipe	inch (mm)	1/4" (6,35)	1/4" (6,35)	1/4" (6,35)	1/4" (6,35)
	Gas pipe	inch (mm)	3/8" (9,52)	3/8" (9,52)	3/8" (9,52)	3/8" (9,52)
Refrigerent Loading	R410A	kg	1,45	1,45	1,45	1,45
Elevation difference (in/out) 5)	Max	m	10	10	10	10
Piping length (total)	Min / Max	m	3 / 30	3 / 30	3 / 30	3 / 30
Piping length (one unit)	Min / Max	m	3 / 20	3 / 20	3 / 20	3 / 20
Piping length without refrigerant increase	Max	m	20	20	20	20
Additional gas		g/m	20	20	20	20
Operating range 3)	Cooling Min / Max	ºC	16 / 43	16 / 43	16 / 43	16 / 43
	Heating Min / Max	ºC	-10 / 24	-10 / 24	-10 / 24	-10 / 24

Specifications subject to change without notice

TECHNICAL FOCUS

- **NEW!** MAXIMUM EFFICIENCY AND COMFORT WITH ECONAVI
- VERY EXCLUSIVE SILVER DESIGN
- NEW GENERATION OF E-ION AIR PURIFYING SYSTEM WITH 24-HR PATROL SENSOR
- MORE POWERFUL AIRFLOW TO QUICKLY REACH THE DESIRED TEMPERATURE

GLOBAL REMARKS

Rating conditions	Cooling	Heating
Inside air temperature	27ºC DB / 19ºC WB	20ºC DB
Outside air temperature	35ºC DB / 24ºC WB	7ºC DB / 6ºC WB

DB: Dry Bulb; WB: Wet Bulb
This model is not suitable to use in heating mode below -5ºC with continuous operation (24h operation).
Connectivity restriction : CS-E/XE_MKE units are only compatible with CU-2E15LBE, CU-2E18LBE, CU-3E18LBE, CU-4E23LBE and CU-4E27CBPG outdoor units. No other outdoor unit can be connected.

1) EER and COP classification is at 230 V in accordance with EU directive 2002/31/EC.
2) The annual consumption is calculated by multiplying the input power at 230 V by an avarage of 500 hours per year in cooling mode.
3) The Sound pressure level of the units shows the value measured of a position 1 meter in front of the main body and 0,8 meters below the unit. The sound pressure is measured in accordance with Eurovent 6/C/006-97 specification.
4) Add 70 mm for piping port.
5) When installing the outdoor unit at a higher position than the indoor unit.

KIT-2XE77-MBE // KIT-2XE79-MBE // KIT-2XE712-MBE // KIT-2XE99-MBE // KIT-2E77-MBE // KIT-2E79-MBE // KIT-2E712-MBE // KIT-2E99-MBE

HEALTHY AIR
- E-ion plus air purifying system
- Patrol sensor to detect and eliminate contaminants
- Air conditioner and purifier with simultaneous or independent operation

ENERGY EFFICIENCY AND ECOLOGY
- Maximum efficiency Inverter system, for bigger savings
- **NEW!**-30% consumption with ECONAVI on heat pump (-20% on cooling mode)
- R410A refrigerant gas

COMFORT
- Powerful mode
- Uniform dispersion of airflow
- Automatic vertical airflow control
- Hot start mode, increased comfort on heat pump mode, no cool airflow when process starts
- Automatic restart after power cut

EASE OF USE
- Real time clock with dual ON&OFF timer
- User friendly infrared remote control
- **NEW!** Optional wired weekly timer with 6 settings per day and 42 settings per week
- **NEW!** Connectivity function (indoor unit equipped with PCB port which can be connected to outside network)

EASY INSTALLATION AND MAINTENANCE
- Removable, washable panel
- 30 m maximum connection distance
- 10 m maximum elevation difference
- Maintenance access through the top panel of the outdoor unit
- Self-diagnosis function

CU-2E15LBE

A class energy saving INVERTER+

ETHEREA MULTI SPLIT 2X1 // INVERTER+

ETHEREA, A NEW CONCEPT IN AIR CONDITIONERS: AIR PURIFYING SYSTEM, STYLISH DESIGN AND HIGH EFFICIENCY. With the multi system, save more than with the 1x1!

ECONAVI 's sensor technology uses factors such as speed, frequency and temperature to determine the human activity level in the room for maximum comfort and maximum savings. With ECONAVI , you can save up to 30%. Cool and stylish, the distinctive, beautiful rounded form is designed to complement today's modern interiors. Etherea has an advanced air purifying system with the new Patrol Sensor to detect and eliminate contaminants.

Using a Multi Split 2x1 Inverter+ system with the outdoor unit CU-2E18LBE instead of 2 individual mono split Inverter+ systems, you reduce consumption and thus save more! Up to 16%! Furthermore, using a Multi Split system, you save space on the outdoor unit, making it easier to install in small spaces.

The multi system also has a greater difference in elevation and longer tubing, leading to greater flexibility on roof installations.

30% savings ECONAVI | improved comfort AUTOCOMFORT | quality air control 24 h PATROL SENSOR | pure air system e-ION PLUS | down to -15°C in heating mode OUTDOOR TEMPERATURE

CS-XE7MKEW // CS-XE9MKEW // CS-XE12MKEW

INCLUDED WITH THE INDOOR UNIT

SILVER KIT			KIT-2XE99-MKE	KIT-2XE912-MKE	KIT-2XE1212-MKE
Indoor			CS-XE9MKEW	CS-XE9MKEW	CS-XE12MKEW
			CS-XE9MKEW	CS-XE12MKEW	CS-XE12MKEW
WHITE KIT			**KIT-2E99-MKE**	**KIT-2E912-MKE**	**KIT-2E1212-MKE**
Indoor			CS-E9MKEW	CS-E9MKEW	CS-E12MKEW
			CS-E9MKEW	CS-E12MKEW	CS-E12MKEW
Outdoor			CU-2E18LBE	CU-2E18LBE	CU-2E18LBE
Cooling capacity	Nominal (Min - Max)	kW	4,80 (1,50 - 5,20)	5,00 (1,50 - 5,30)	5,20 (1,50 - 5,40)
		kCal/h	4.130 (1.290 - 4.470)	4.300 (1.290 - 4.560)	4.470 (1.290 - 4.640)
EER 1)	**Nominal (Min - Max)**	**Energy Saving**	**3,66 (6,00 - 3,42) A**	**3,36 (6,00 - 3,44) A**	**3,42 (6,00 - 3,42) A**
Power input Cooling	Nominal (Min - Max)	kW	1,31 (0,25 - 1,52)	1,49 (0,25 - 1,54)	1,52 (0,25 - 1,58)
Heating capacity	Nominal (Min - Max)	kW	5,60 (1,10 - 7,20)	5,60 (1,10 - 7,20)	5,60 (1,10 - 7,20)
		kCal/h	4.820 (950 - 6.190)	4.820 (950 - 6.190)	4.820 (950 - 6.190)
COP 1)	**Nominal (Min - Max)**	**Energy Saving**	**4,48 (5,24 - 4,14) A**	**4,55 (5,24 - 4,19) A**	**4,63 (5,24 - 4,24) A**
Power input Heating	Nominal (Min - Max)	kW	1,25 (0,21 - 1,74)	1,23 (0,21 - 1,72)	1,21 (0,21 - 1,70)
Annual Energy Consumption 2)		kWh	655	745	760
INDOOR UNIT					
Air Volume	Cooling	m³/h	606	606 (E9) / 654 (E12)	654
Moisture removal volume		l/h	1,5 / 1,5	1,4 (E9) / 1,6 (E12)	1,6 / 1,6
Sound pressure level 3)	Cooling and Heating (S-Lo)	dB(A)	26	26 (E9) / 29 (E12)	29
Sound power level	Cooling and Heating (Hi)	dB	56	56 (E9) / 60 (E12)	60
Dimensions	H x W x D	mm	290 x 870 x 204	290 x 870 x 204	290 x 870 x 204
Net weight		kg	9	9	9
Air purifier filter			Patrol + E-ion	Patrol + E-ion	Patrol + E-ion
OUTDOOR UNIT					
Power source		V	230	230	230
Connection		mm²	4 x 1,5	4 x 1,5	4 x 1,5
Current	Cooling / Heating (Nominal)	A	6,10 / 5,55	6,95 / 5,45	7,10 / 5,35
Air Volume	Cooling / Heating	m³/h	2.070 / 1.860	2.070 / 1.860	2.070 / 1.860
Sound pressure level 3)	Cooling / Heating (Hi)	dB(A)	49 / 51	49 / 51	49 / 51
Sound power level	Cooling / Heating (Hi)	dB	64 / 66	64 / 66	64 / 66
Dimensions 4)	H x W x D	mm	540 x 780 (+70) x 289	540 x 780 (+70) x 289	540 x 780 (+70) x 289
Net weight		kg	38	38	38
Piping connections	Liquid pipe	inch (mm)	1/4" (6,35)	1/4" (6,35)	1/4" (6,35)
	Gas pipe	inch (mm)	3/8" (9,52)	3/8" (9,52)	3/8" (9,52)
Refrigerant Loading	R410A	kg	1,45	1,45	1,45
Elevation difference (in/out) 5)	Max	m	10	10	10
Piping length	Total	m	30	30	30
Piping length (one unit)	Min / Max	m	3 / 20	3 / 20	3 / 20
Piping length without refrigerant increase	Max	m	20	20	20
Additional gas		g/m	20	20	20
Operating range 3)	Cooling Min / Max	ºC	16 / 43	16 / 43	16 / 43
	Heating Min / Max	ºC	-10 / 24	-10 / 24	-10 / 24

Specifications subject to change without notice

TECHNICAL FOCUS

- **NEW!** MAXIMUM EFFICIENCY AND COMFORT WITH ECONAVI
- VERY EXCLUSIVE SILVER DESIGN
- NEW GENERATION OF E-ION AIR PURIFYING SYSTEM WITH 24-HR PATROL SENSOR
- MORE POWERFUL AIRFLOW TO QUICKLY REACH THE DESIRED TEMPERATURE

GLOBAL REMARKS	Rating conditions	Cooling	Heating
	Inside air temperature	27ºC DB / 19ºC WB	20ºC DB
	Outside air temperature	35ºC DB / 24ºC WB	7ºC DB / 6ºC WB

DB: Dry Bulb; WB: Wet Bulb
This model is not suitable to use in heating mode below -5ºC with continuous operation (24h operation).
Connectivity restriction : CS-E/XE_MKE units are only compatible with CU-2E15LBE, CU-2E18LBE, CU-3E18LBE, CU-4E23LBE and CU-4E27CBPG outdoor units. No other outdoor unit can be connected.

1) EER and COP classification is at 230 V in accordance with EU directive 2002/31/EC.
2) The annual consumption is calculated by multiplying the input power at 230 V by an avarage of 500 hours per year in cooling mode.
3) The Sound pressure level of the units shows the value measured of a position 1 meter in front of the main body and 0,8 meters below the unit. The sound pressure is measured in accordance with Eurovent 6/C/006-97 specification.
4) Add 70 mm for piping port.
5) When installing the outdoor unit at a higher position than the indoor unit.

KIT-2XE99-MKE // KIT-2XE912-MKE // KIT-2XE1212-MKE KIT-2E99-MKE // KIT-2E912-MKE // KIT-2E1212-MKE

HEALTHY AIR
- E-ion plus air purifying system
- Patrol sensor to detect and eliminate contaminants
- Air conditioner and purifier with simultaneous or independent operation

ENERGY EFFICIENCY AND ECOLOGY
- Maximum efficiency Inverter system, for bigger savings
- **NEW!**-30% consumption with ECONAVI on heat pump (-20% on cooling mode)
- R410A refrigerant gas

COMFORT
- Powerful mode
- Uniform dispersion of airflow
- Automatic vertical airflow control
- Hot start mode, increased comfort on heat pump mode, no cool airflow when process starts
- Automatic restart after power cut

EASE OF USE
- Real time clock with dual ON&OFF timer
- User friendly infrared remote control
- **NEW!** Optional wired weekly timer with 6 settings per day and 42 settings per week
- **NEW!** Connectivity function (indoor unit equipped with PCB port which can be connected to outside network)

EASY INSTALLATION AND MAINTENANCE
- Removable, washable panel
- 30 m maximum connection distance
- 10 m maximum elevation difference
- Maintenance access through the top panel of the outdoor unit
- Self-diagnosis function

CU-2E18LBE

A class energy saving INVERTER+

ETHEREA MULTI SPLIT 3X1 // INVERTER+

ETHEREA, A NEW CONCEPT IN AIR CONDITIONERS: AIR PURIFYING SYSTEM, STYLISH DESIGN AND HIGH EFFICIENCY. With the multi system, save more than with the 1x1!

ECONAVI's sensor technology uses factors such as speed, frequency and temperature to determine the human activity level in the room for maximum comfort and maximum savings. With ECONAVI, you can save up to 30%.

Cool and stylish, the distinctive, beautiful rounded form is designed to complement today's modern interiors.

Etherea has an advanced air purifying system with the new Patrol Sensor to detect and eliminate contaminants.Using a Multi Split 3X1 Inverter+ system with the outdoor unit CU-3E18LBE instead of 3 individual mono split Inverter+ systems, you reduce consumption and thus save more! Up to 34%! Furthermore, using a Multi Split system, you save space on the outdoor unit, making it easier to install in small spaces.

The multi system also has a greater difference in elevation and longer tubing, leading to greater flexibility on roof installations.

30% savings ECONAVI | improved comfort AUTOCOMFORT | quality air control 24 h PATROL SENSOR | pure air system e-ION PLUS | down to -15°C in heating mode OUTDOOR TEMPERATURE

NEW 2011

CS-XE7MKEW // CS-XE9MKEW // CS-XE12MKEW // CS-XE15MKEW

INCLUDED WITH THE INDOOR UNIT

SILVER KIT			KIT-3XE7712-MBE	KIT-3XE7715-MBE
Indoor			CS-XE7MKEW (x2)	CS-XE7MKEW (x2)
			CS-XE12MKEW (x1)	CS-XE15MKEW (x1)
WHITE KIT			**KIT-3E7712-MBE**	**KIT-3E7715-MBE**
Indoor			CS-E7MKEW (x2)	CS-E7MKEW (x2)
			CS-E12MKEW (x1)	CS-E15MKEW (x1)
Outdoor			CU-3E18LBE	CU-3E18LBE
Cooling capacity	Nominal (Min - Max)	kW	5,20 (1,90-7,20)	5,20 (1,80-7,30)
	Nominal (Min - Max)	kCal/h	4.470 (1.630-6.190)	4.470 (1.550-6.280)
EER 1)	**Nominal (Min - Max)**	**Energy Saving**	**4,30 (5,28 - 3,30) A**	**4,30 (5,00 - 3,35) A**
Power input Cooling	Nominal (Min - Max)	kW	1.21 (0.36-2.18)	1.21 (0.36-2.18)
Heating capacity	Nominal (Min - Max)	kW	6,80 (1,40-8,30)	6,80 (1,60-8,30)
	Nominal (Min - Max)	kCal/h	5.850 (1.200-7.140)	5.850 (1.380-7.140)
COP 1)	**Nominal (Min - Max)**	**Energy Saving**	**4,63 (4,38 - 3,94) A**	**4,72 (5,00 - 3,93) A**
Power input Heating	Nominal (Min - Max)	kW	1,47 (0,32-2,11)	1,44 (0,32-2,11)
Annual Energy Consumption 2)		kWh	745	720
INDOOR UNIT				
Air Volume	Cooling	m³/h	606 (E7) / 654 (E12)	606 (E7) / 672 (E15)
Moisture removal volume		l/h	1,3 (E7) / 1,8 (E12)	0,8 (E7) / 1,6 (E15)
Sound pressure Level 3)	Cooling (S-Lo)	dB(A)	26 (E7) / 29 (E12)	26 (E7) / 29 (E15)
	Heating (S-Lo)	dB(A)	26 (E7) / 29 (E12)	26 (E7) / 30 (E15)
Sound power Level	Cooling and Heating (Hi)	dB	56 (E7) / 60 (E12)	56 (E7) / 60 (E15)
Dimensions	H x W x D	mm	290 x 870 x 204	290 x 870 x 204
Net weight		kg	9	9
Air purifier filter			Patrol + E-ion	Patrol + E-ion
OUTDOOR UNIT				
Power source		V	230	230
Connection		mm²	4 x 1,5	4 x 1,5
Current	Cooling / Heating Nominal	A	5,3 / 8,2	5,3 / 7,9
Air Volume	Cooling / Heating	m³/h	2.502	2.502
Sound pressure Level 3)	Cooling / Heating (Hi)	dB(A)	46 / 47	46 / 47
Sound power Level	Cooling / Heating (Hi)	dB	60 / 61	60 / 61
Dimensions 4)	H x W x D	mm	795 x 875 (+95) x 320	795 x 875 (+95) x 320
Net weight		kg	71	71
Piping connections	Liquid pipe	inch (mm)	1/4" (6,35)	1/4" (6,35)
	Gas pipe	inch (mm)	3/8" (9,52)	3/8" (9,52)
Refrigerent Loading	R410A	kg	2,64	2,64
Elevation difference (in/out) 5)	Max	m	15	15
Piping length (total)	Min / Max	m	3 / 50	3 / 50
Piping length (one unit)	Min / Max	m	3 / 25	3 / 25
Piping length without refrigerant increase	Max	m	30	30
Additional gas		g/m	20	20
Operating range 3)	Cooling Min / Max	ºC	-10 / 46	-10 / 46
	Heating Min / Max	ºC	-15 / 24	-15 / 24

Specifications subject to change without notice

TECHNICAL FOCUS

- **NEW!** MAXIMUM EFFICIENCY AND COMFORT WITH ECONAVI
- VERY EXCLUSIVE SILVER DESIGN
- NEW GENERATION OF E-ION AIR PURIFYING SYSTEM WITH 24-HR PATROL SENSOR
- MORE POWERFUL AIRFLOW TO QUICKLY REACH THE DESIRED TEMPERATURE

GLOBAL REMARKS

Rating conditions	Cooling	Heating
Inside air temperature	27ºC DB / 19ºC WB	20ºC DB
Outside air temperature	35ºC DB / 24ºC WB	7ºC DB / 6ºC WB

DB: Dry Bulb; WB: Wet Bulb
This model is not suitable to use in heating mode below -5ºC with continuous operation (24h operation).
Connectivity restriction : CS-E/XE_MKE units are only compatible with CU-2E15LBE, CU-2E18LBE, CU-3E18LBE, CU-4E23LBE and CU-4E27CBPG outdoor units. No other outdoor unit can be connected.

1) EER and COP classification is at 230 V in accordance with EU directive 2002/31/EC.
2) The annual consumption is calculated by multiplying the input power at 230 V by an avarage of 500 hours per year in cooling mode.
3) The Sound pressure level of the units shows the value measured of a position 1 meter in front of the main body and 0,8 meters below the unit. The sound pressure is measured in accordance with Eurovent 6/C/006-97 specification.
4) Add 95 mm for piping port.
5) When installing the outdoor unit at a higher position than the indoor unit.

KIT-3XE7712-MBE // KIT-3XE7715-MBE
KIT-3E7712-MBE // KIT-3E7715-MBE

HEALTHY AIR
- E-ion plus air purifying system
- Patrol sensor to detect and eliminate contaminants
- Air conditioner and purifier with simultaneous or independent operation

ENERGY EFFICIENCY AND ECOLOGY
- Maximum efficiency Inverter system, for bigger savings
- **NEW!**-30% consumption with ECONAVI on heat pump (-20% on cooling mode)
- R410A refrigerant gas

COMFORT
- Powerful mode
- Uniform dispersion of airflow
- Automatic vertical airflow control
- Hot start mode, increased comfort on heat pump mode, no cool airflow when process starts
- Automatic restart after power cut

EASE OF USE
- Real time clock with dual ON&OFF timer
- User friendly infrared remote control
- **NEW!** Optional wired weekly timer with 6 settings per day and 42 settings per week
- **NEW!** Connectivity function (indoor unit equipped with PCB port which can be connected to outside network)

EASY INSTALLATION AND MAINTENANCE
- Removable, washable panel
- 50 m maximum connection distance
- 15 m maximum elevation difference
- Maintenance access through the top panel of the outdoor unit
- Self-diagnosis function

CU-3E18LBE

A class energy saving INVERTER+

ETHEREA MULTI SPLIT 4X1 // INVERTER+

ETHEREA, A NEW CONCEPT IN AIR CONDITIONERS: AIR PURIFYING SYSTEM, STYLISH DESIGN AND HIGH EFFICIENCY. With the multi system, save more than with the 1x1!

ECONAVI 's sensor technology uses factors such as speed, frequency and temperature to determine the human activity level in the room for maximum comfort and maximum savings. With ECONAVI, you can save up to 30%. Cool and stylish, the distinctive, beautiful rounded form is designed to complement today's modern interiors. Etherea has an advanced air purifying system with the new Patrol Sensor to detect and eliminate contaminants.

Using a Multi Split 4X1 Inverter+ system with the outdoor unit CU-4E23LBE instead of 4 individual mono split Inverter+ systems, you reduce consumption and thus save more! Up to 36%! Furthermore, using a Multi Split system, you save space on the outdoor unit, making it easier to install in small spaces.

The multi system also has a greater difference in elevation and longer tubing, leading to greater flexibility on roof installations.

30% savings ECONAVI | improved comfort AUTOCOMFORT | quality air control 24 h PATROL SENSOR | pure air system e-ION PLUS | down to -15°C in heating mode OUTDOOR TEMPERATURE

NEW 2011

ETHEREA

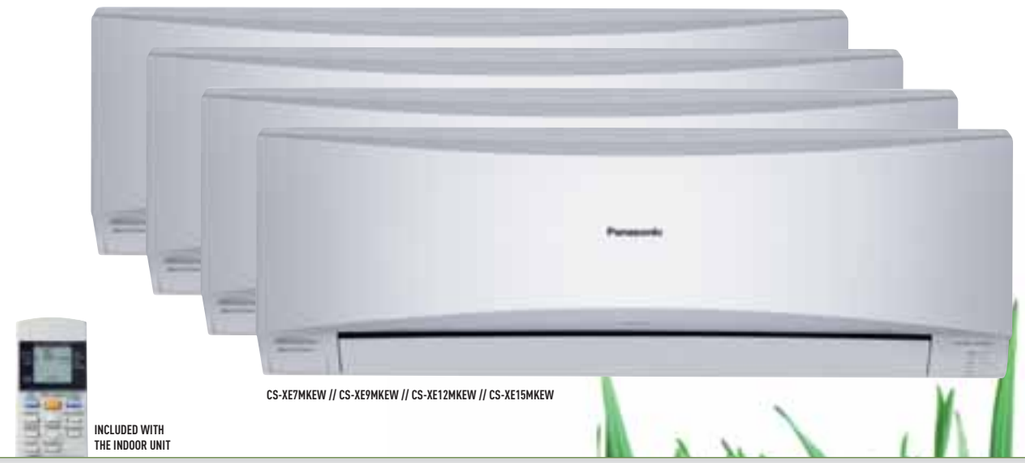

CS-XE7MKEW // CS-XE9MKEW // CS-XE12MKEW // CS-XE15MKEW

INCLUDED WITH THE INDOOR UNIT

SILVER KIT			KIT-4XE77712-MBE	KIT-4XE77715-MBE	KIT-4XE77712-MKE	KIT-4XE77715-MKE
Indoor			CS-XE7MKEW (x3)	CS-XE7MKEW (x3)	CS-XE7MKEW (x3)	CS-XE7MKEW (x3)
			CS-XE12MKEW (x1)	CS-XE15MKEW (x1)	CS-XE12MKEW (x1)	CS-XE15MKEW (x1)
WHITE KIT			**KIT-4E77712-MBE**	**KIT-4E77715-MBE**	**KIT-4E77712-MKE**	**KIT-4E77715-MKE**
Indoor			CS-E7MKEW (x3)	CS-E7MKEW (x3)	CS-E7MKEW (x3)	CS-E7MKEW (x3)
			CS-E12MKEW (x1)	CS-E15MKEW (x1)	CS-E12MKEW (x1)	CS-E15MKEW (x1)
Outdoor			CU-4E23LBE	CU-4E23LBE	CU-4E27CBPG	CU-4E27CBPG
Cooling capacity	Nominal (Min - Max)	kW	6,80 (1,90 - 8,80)	6,80 (1,90 - 8,80)	8,00 (2,80 - 8,90)	8,00 (2,80 - 8,90)
		kCal/h	5.850 (1.630 - 7.570)	5.850 (1.630 - 7.650)	6.880 (2.410 - 7.650)	6.880 (2.410 - 7.650)
EER [1]	**Nominal (Min - Max)**	**Energy Saving**	**4,12 (5,59 - 3,56) A**	**4,12 (5,59 - 3,56) A**	**3,76 (5,71 - 3,09) A**	**3,76 (5,71 - 3,20) A**
Power input Cooling	Nominal (Min - Max)	kW	1.65 (0.34 - 2.47)	1.65 (0.34 - 2.47)	2,13 (0,49 - 2,88)	2,10 (0,49 - 2,87)
Heating capacity	Nominal (Min - Max)	kW	8,60 (3,00 - 10,60)	8,60 (3,00 - 10,60)	9,40 (3,40 - 10,50)	9,40 (3,80 - 10,50)
		kCal/h	7.400 (2.580 - 9.120)	7.400 (2.580 - 9.120)	8.080 (2.920 - 9.030)	8.080 (3.270 - 9.030)
COP [1]	**Nominal (Min - Max)**	**Energy Saving**	**4,65 (5,17 - 4,08) A**	**4,67 (5,09 - 4,09) A**	**4,43 (5,76 - 3,30) A**	**4,50 (5,31 - 3,34) A**
Power input Heating	Nominal (Min - Max)	kW	1,85 (0,58 - 2,60)	1,84 (0,59 - 2,59)	2,12 (0,59 - 3,18)	2,09 (0,64 - 3,14)
Annual Energy Consumption [2]		kWh	825	825	1.065	1.055
INDOOR UNIT						
Air Volume	Cooling	m³/h	606 (E7) / 654 (E12)	606 (E7) / 672 (E15)	654 (E7) / 750 (E12)	654 (E7) / 750 (E15)
Moisture removal volume		l/h	0,9 (E7) / 1,5 (E12)	0,9 (E7) / 1,6 (E15)	1,1 (E7) / 1,6 (E12)	1,0 (E7) / 1,8 (E15)
Sound pressure level [3]	Cooling (S-Lo)	dB(A)	26 (E7) / 29 (E12)	26 (E7) / 29 (E15)	26 (E7) / 29 (E12)	26 (E7) / 29 (E15)
	Heating (S-Lo)	dB(A)	26 (E7) / 29 (E12)	26 (E7) / 30 (E15)	26 (E7) / 29 (E12)	26 (E7) / 30 (E15)
Sound power level	Cooling and Heating (Hi)	dB	56 (E7) / 60 (E12)	56 (E7) / 60 (E15)	56 (E7) / 60 (E12)	56 (E7) / 60 (E15)
Dimensions	H x W x D	mm	290 x 870 x 204	290 x 870 x 204	290 x 870 x 204	290 x 870 x 204
Net weight		kg	9	9	9	9
Air purifier filter			Patrol + E-ion	Patrol + E-ion	Patrol + E-ion	Patrol + E-ion
OUTDOOR UNIT						
Power source		V	230	230	230	230
Connection		mm²	4 x 1,5	4 x 1,5	4 x 1,5	4 x 1,5
Current	Cooling / Heating (Nominal)	A	7,40 / 8,60	7,40 / 8,50	9,40 / 9,30	9,30 / 9,20
Air Volume	Cooling / Heating	m³/h	2.550	2.550	2.910	2.910
Sound pressure level [3]	Cooling / Heating (Hi)	dB(A)	48 / 49	48 / 49	48 / 49	48 / 49
Sound power level	Cooling / Heating (Hi)	dB	62 / 63	62 / 63	61 / 62	61 / 62
Dimensions [4]	H x W x D	mm	795 x 875 (+95) x 320	795 x 875 (+95) x 320	908 x 900 x 320	908 x 900 x 320
Net weight		kg	72	72	73	73
Piping connections	Liquid pipe	inch (mm)	1/4" (6,35)	1/4" (6,35)	1/4" (6,35)	1/4" (6,35)
	Gas pipe	inch (mm)	3/8" (9,52)	3/8" (9,52)	3/8" (9,52)	3/8" (9,52)
Refrigerant Loading	R410A	kg	2,64	2,64	3,10	3,10
Elevation difference (in/out) [5]	Max	m	15	15	15	15
Piping length	Total	m	60	60	70	70
Piping length (one unit)	Min / Max	m	3 / 25	3 / 25	3 / 25	3 / 25
Piping length without refrigerant increase	Max	m	30	30	40	40
Additional gas		g/m	20	20	20	20
Operating range [3]	Cooling Min / Max	ºC	-10 / 46	-10 / 46	16 / 43	16 / 43
	Heating Min / Max	ºC	-15 / 24	-15 / 24	-20 / 24	-20 / 24

Specifications subject to change without notice

TECHNICAL FOCUS

- **NEW!** MAXIMUM EFFICIENCY AND COMFORT WITH ECONAVI
- VERY EXCLUSIVE SILVER DESIGN
- NEW GENERATION OF E-ION AIR PURIFYING SYSTEM WITH 24-HR PATROL SENSOR
- MORE POWERFUL AIRFLOW TO QUICKLY REACH THE DESIRED TEMPERATURE

GLOBAL REMARKS	Rating conditions	Cooling	Heating
	Inside air temperature	27ºC DB / 19ºC WB	20ºC DB
	Outside air temperature	35ºC DB / 24ºC WB	7ºC DB / 6ºC WB

DB: Dry Bulb; WB: Wet Bulb
This model is not suitable to use in heating mode below -5ºC with continuous operation (24h operation).
Connectivity restriction : CS-E/XE_MKE units are only compatible with CU-2E15LBE, CU-2E18LBE, CU-3E18LBE, CU-4E23LBE and CU-4E27CBPG outdoor units. No other outdoor unit can be connected.

1) EER and COP classification is at 230 V in accordance with EU directive 2002/31/EC.
2) The annual consumption is calculated by multiplying the input power at 230 V by an avarage of 500 hours per year in cooling mode.
3) The Sound pressure level of the units shows the value measured of a position 1 meter in front of the main body and 0,8 meters below the unit. The sound pressure is measured in accordance with Eurovent 6/C/006-97 specification.
4) Add 70 mm for piping port.
5) When installing the outdoor unit at a higher position than the indoor unit.

KIT-4XE77712-MBE // KIT-4XE77715-MBE // KIT-4XE77712-MKE // KIT-4XE77715-MKE KIT-4E77712-MBE // KIT-4E77715-MBE // KIT-4E77712-MKE // KIT-4E77715-MKE

HEALTHY AIR
- E-ion plus air purifying system
- Patrol sensor to detect and eliminate contaminants
- Air conditioner and purifier with simultaneous or independent operation

ENERGY EFFICIENCY AND ECOLOGY
- Maximum efficiency Inverter system, for bigger savings
- **NEW!**-30% consumption with ECONAVI on heat pump (-20% on cooling mode)
- R410A refrigerant gas

COMFORT
- Powerful mode
- Uniform dispersion of airflow
- Automatic vertical airflow control
- Hot start mode, increased comfort on heat pump mode, no cool airflow when process starts
- Automatic restart after power cut

EASE OF USE
- Real time clock with dual ON&OFF timer
- User friendly infrared remote control
- **NEW!** Optional wired weekly timer with 6 settings per day and 42 settings per week
- **NEW!** Connectivity function (indoor unit equipped with PCB port which can be connected to outside network)

EASY INSTALLATION AND MAINTENANCE
- Removable, washable panel
- 70 m maximum connection distance (For CU-4E27CBPG)
- 15 m maximum elevation difference
- Maintenance access through the top panel of the outdoor unit
- Self-diagnosis function

CU-4E23LBE

CU-4E27CBPG

A class energy saving INVERTER+

FREE MULTI

UP TO 4 INDOOR UNITS WITH A SINGLE OUTDOOR UNIT

Up to four different rooms with a single outdoor unit. Free Multi is what we need.
With Free Multi you can take care of 2, 3 or 4 rooms with a single outdoor unit.
With the Free Multi range, your clients will be able to save space at the time of installing the outdoor unit, and they will have more energy efficiency than with various 1x1 systems. They will be able to save up to 30% of energy.
Choose the outdoor units according to the necessities of each of your client's rooms, and calculate which outdoor unit best adapts itself to the combinations of indoor combinations.
The combination table will help you to select the best option.

INDOOR UNIT CAPACITIES

CAPACITY	7 - 2.0 kW	9/10 - 2.5 kW	9/10 - 2.8 kW	12 - 3.2 kW	15 - 4 kW	18 - 5 kW	21 - 6 kW
SPLIT ETHEREA SILVER OR WHITE INVERTER+	CS-XE7MKEW CS-E7MKEW	CS-XE9MKEW CS-E9MKEW		CS-XE12MKEW CS-E12MKEW	CS-XE15MKEW [1] CS-E15MKEW [1]	CS-XE18MKEW [1] CS-E18MKEW [1]	CS-XE21MKEW [1] CS-E21MKEW [1]
1-WAY CASSETTE INVERTER	CS-ME7KB1E		CS-ME10EBE1E	CS-ME12EBE1E	CS-ME14EB1E		
LOW STATIC PRESSURE HIDE AWAY INVERTER+		CS-E10KD3EA			CS-E15JD3EA [1]	CS-E18JD3EA [1]	
FLOOR CONSOLE INVERTER+			CS-E9GFEW	CS-E12GFEW		CS-E18GFEW [1]	
FLOOR/CEILING CONSOLE INVERTER+			CS-ME10DTEG		CS-E15DTEW [1]	CS-E18DTEW [1]	
4 WAY 60X60 CASSETTE INVERTER+		CS-E10KB4EA			CS-E15HB4EA [1]	CS-E18HB4EA [1]	CS-E21JB4EA [1]

1) A CZ-MA1P pipe reducer is needed on the E15 and E18, a CZ-MA2P pipe expander is needed on the E21.

POSSIBLE INDOOR UNIT COMBINATIONS

Models		Possible indoor unit combinations	Capacity kW [1]	Refrigerant pipe diameter: Indoor unit	Liquid	Gas	Pipe length: Maximum pipe length (1 room)	Maximum pipe length (total)	Max pipe without additional gas refills	Additional gas	Maximum level difference	Capacity	Indoor/outdoor unit combinations: Wall-mounted	Floor console	4 -way Cassette	1 -way Cassette	Floor / ceiling	Ducts
2 Rooms	CU-2E15LBE	A [2]: 7 or 9/10 or 12 B [2]: 7 or 9/10 or 12	4,0-5,6	Room A Room B	1/4" 1/4"	3/8" 3/8"	20 m	30 m	20 m	20 g/m	10 m	7	✘					
												9/10	✘	✘	✘			✘
												12	✘	✘				
	CU-2E18LBE	A [2]: 7 or 9/10 or 12 B [2]: 7 or 9/10 or 12	4,0-6,4	Room A Room B	1/4" 1/4"	3/8" 3/8"	20 m	30 m	20 m	20 g/m	10 m	7	✘					
												9/10	✘	✘	✘		✘	✘
												12	✘	✘				
3 Rooms	CU-3E18LBE	A [3]: 7 or 9/10 or 12 or 15 or 18 B [3]: 7 or 9/10 or 12 or 15 or 18 C [3]: 7 or 9/10 or 12 or 15 or 18	4,5-9,0	Room A Room B Room C	1/4" 1/4" 1/4"	3/8" 3/8" 3/8"	25 m	50 m	30 m	20 g/m	15 m	7	✘			✘		
												9/10	✘	✘	✘	✘	✘	✘
												12	✘	✘		✘		
												14/15	✘		✘	✘	✘	✘
												18	✘	✘	✘		✘	✘
4 Rooms	CU-4E23LBE	A [3]: 7 or 9/10 or 12 or 15 or 18 or 21 B [3]: 7 or 9/10 or 12 or 15 or 18 or 21 C [3]: 7 or 9/10 or 12 or 15 or 18 or 21 D [3]: 7 or 9/10 or 12 or 15 or 18 or 21	4,5-11,0	Room A Room B Room C Room D	1/4" 1/4" 1/4" 1/4"	3/8" 3/8" 3/8" 3/8"	25 m	60 m	30 m	20 g/m	15 m	7	✘			✘		
												9/10	✘	✘	✘	✘	✘	✘
												12	✘	✘		✘		
												14/15	✘		✘	✘	✘	✘
												18	✘	✘	✘		✘	✘
												21	✘		✘			
	CU-4E27CBPG	A [3]: 7 or 9/10 or 12 or 15 or 18 B [3]: 7 or 9/10 or 12 or 15 or 18 C [3]: 7 or 9/10 or 12 or 15 or 18 D [3]: 7 or 9/10 or 12 or 15 or 18	4,5-13,6	Room A Room B Room C Room D	1/4" 1/4" 1/4" 1/4"	3/8" 3/8" 3/8" 3/8"	25 m	70 m	40 m	20 g/m	15 m	7	✘			✘		
												9/10	✘	✘	✘	✘	✘	✘
												12	✘	✘		✘		
												14/15	✘		✘	✘	✘	✘
												18	✘	✘	✘		✘	✘

1) The combinations must remain within this range,
2) A minimum of two indoor units must be connected,
3) A minimum of two indoor units must be connected. minimum combination at 2x1: 7+9,
Connectivity restriction : CS-E/XE_MKE units are only compatible with CU-2E15LBE. CU-2E18LBE. CU-3E18LBE. CU-4E23LBE and CU-4E27CBPG outdoor units, No other outdoor unit can be connected,

INDOOR UNITS FOR FREE MULTI COMBINATIONS

NEW 2011

30% savings ECONAVI · improved comfort AUTOCOMFORT · quality air control 24 h PATROL SENSOR · pure air system eco PLUS · perfect humidity control MILD DRY · silent air 20 dB SUPER QUIET

ETHEREA // SILVER OR WHITE // INVERTER+			2,0 KW	2,5 KW	3,2 KW	4 KW	5 KW	6 KW
Silver Indoor			CS-XE7MKEW	CS-XE9MKEW	CS-XE12MKEW	CS-XE15MKEW 1)	CS-XE18MKEW 1)	CS-XE21MKEW 1)
White Indoor			CS-E7MKEW	CS-E9MKEW	CS-E12MKEW	CS-E15MKEW 1)	CS-E18MKEW 1)	CS-E21MKEW 1)
Cooling capacity	Nominal	kW / kCal/h	2,00 / 1.720	2,50 / 2.150	3,20 / 2.750	4,00 / 3.440	5,00 / 4.300	6,00 / 5.160
Heating capacity	Nominal	kW / kCal/h	3,20 / 2.750	3,60 / 3.010	4,50 / 3.870	5,60 / 4.820	6,80 / 5.850	8,50 / 7.310
Connection		mm²	4 x 1,5	4 x 1,5	4 x 1,5	4 x 1,5	4 x 1,5	4 x 1,5
Sound pressure level 2)	Cooling (Hi / Lo / S-Lo)	dB(A)	40 / 26 / 23	40 / 26 / 23	44 / 32 / 26	44 / 32 / 26	46 / 33 / 30	46 / 33 / 30
	Heating (Hi / Lo / S-Lo)	dB(A)	40 / 26 / 23	40 / 26 / 23	44 / 32 / 26	44 / 33 / 32	46 / 35 / 32	46 / 35 / 32
Sound power level	Cooling / Heating (Hi)	dB	54 / 56	56 / 56	60 / 60	60 / 60	62 / 62	62 / 62
Dimensions	H x W x D	mm	290 x 870 x 204	290 x 870 x 204	290 x 870 x 204	290 x 870 x 204	290 x 1.070 x 235	290 x 1.070 x 235
Net weight		kg	9	9	9	9	12	12
Air purifier filter			Patrol + E-ion	Patrol + E-ion	Patrol + E-ion	Patrol + E-ion	Patrol + E-ion	Patrol + E-ion
Piping connections	Liquid pipe	inch (mm)	1/4" (6,35)	1/4" (6,35)	1/4" (6,35)	1/4" (6,35)	1/4" (6,35)	1/4" (6,35)
	Gas pipe	inch (mm)	3/8" (9,52)	3/8" (9,52)	3/8" (9,52)	1/2" (12,70)	1/2" (12,70)	1/2" (12,70)

LOW STATIC PRESSURE HIDE AWAY // INVERTER+			2,5 KW	4 KW	5 KW
Indoor hide away			CS-E10KD3EA	CS-E15JD3EA 1)	CS-E18JD3EA 1)
Wired remote control	Include on the indoor unit		CZ-RD52CP	CZ-RD52CP	CZ-RD52CP
Cooling capacity	Nominal	kW / kCal/h	2,50 / 2.150	4,00 / 3.440	5,00 / 4.300
Heating capacity	Nominal	kW / kCal/h	3,60 / 3.100	5,60 / 4.820	6,80 / 5.850
Connection		mm²	4 x 1,5	4 x 1,5	4 x 1,5
External static pressure	High / Low	Pa (mm)	34 / 64 (3,47 / 6,53)	34 / 69 (3,47 / 7,04)	34 / 78 (3.47 / 7,95)
Air Volume	High / Medium / Low	m³/h	414 / 402 / 330	474 / 402 / 330	624 / 528 / 444
Sound pressure level 2)	Cooling (Quiet / Low / High)	dB(A)	24 / 27 / 31	24 / 27 / 33	27 / 30 / 41
	Heating (Quiet / Low / High)	dB(A)	24 / 27 / 35	24 / 27 / 33	29 / 32 / 41
Sound power level	Cooling / Heating (Hi)	dB	49 / 51	49 / 51	57 / 57
Dimensions 4)	H x W x D	mm	235 x 750 (+65) x 370	235 x 750 (+65) x 370	285 x 750 (+65) x 370
Net weight		kg	17	18	18
Piping connections	Liquid pipe	inch (mm)	1/4" (6,35)	1/4" (6,35)	1/4" (6,35)
	Gas pipe	inch (mm)	3/8" (9,52)	1/2" (12,70)	1/2" (12,70)

prevention allergy filter ALLERU-BUSTER

OPTIONAL

4 WAY 60X60 CASSETTE // INVERTER+			2,5 KW	4 KW	5 KW	6 KW
Indoor			CS-E10KB4EA	CS-E15HB4EA 1)	CS-E18HB4EA 1)	CS-E21JB4EA 1)
Panel	Sold separately		CZ-BT20E	CZ-BT20E	CZ-BT20E	CZ-BT20E
Wireless control	Include on the indoor unit					
Cooling capacity	Nominal	kW / kCal/h	2,50 / 2.150	4,00 / 3.440	5,00 / 4.300	6,00 / 5.160
Heating capacity	Nominal	kW / kCal/h	3,60 / 3.100	5,60 / 4.820	6,80 / 5.850	8,50 / 7.310
Connection		mm²	4 x 1,5	4 x 1,5	4 x 1,5	4 x 1,5
Sound pressure level 2)	Cooling (Hi / Lo / S-Lo)	dB(A)	34 / 26 / 23	34 / 26 / 23	36 / 28 / 25	41 / 33 / 30
	Heating (Hi / Lo / S-Lo)	dB(A)	35 / 28 / 25	35 / 28 / 25	37 / 29 / 26	42 / 34 / 31
Sound power level	Cooling / Heating (Hi)	dB	47 / 58	47 / 48	49 / 50	54 / 55
Dimensions	Indoor (H x W x D)	mm	260 x 575 x 575	260 x 575 x 575	260 x 575 x 575	260 x 575 x 575
Dimensions	Panel (H x W x D)	mm	51 x 700 x 700	51 x 700 x 700	51 x 700 x 700	51 x 700 x 700
Net weight	Indoor (Panel)	kg	18 (2,5)	18 (2,5)	18 (2,5)	18 (2,5)
Air purifier filter	Optional		CZ-SA11P	CZ-SA11P	CZ-SA11P	CZ-SA11P
Piping connections	Liquid / Gas pipe	inch (mm)	1/4" (6,35) / 3/8" (9,52)	1/4" (6,35) / 1/2" (12,70)	1/4" (6,35) / 1/2" (12,70)	1/4" (6,35) / 1/2" (12,70)

prevention allergy filter ALLERU-BUSTER

OPTIONAL

1-WAY CASSETTE // INVERTER+			2,0 KW	2,8 KW	3,2 KW	4 KW
Indoor			CS-ME7KB1E	CS-ME10EBE1E	CS-ME12EBE1E	CS-ME14EBE1E
Panel	Sold separately		CZ-BT20P	CZ-BT20P	CZ-BT20P	CZ-BT20P
Cooling capacity	Nominal	kW / kCal/h	2,00 / 1.720	2,80 / 2.410	3,20 / 2.750	4,00 / 3.440
Heating capacity	Nominal	kW / kCal/h	3,20 / 2.750	4,00 / 3.440	4,50 / 3.870	5,60 / 4.820
Connection		mm²	4 x 1,5	4 x 1,5	4 x 1,5	4 x 1,5
Sound pressure level 2)	Cooling (Hi / Lo / S-Lo)	dB(A)	40 / 32 / 29	40 / 32 / 29	41 / 32 / 29	43 / 32 / 29
	Heating (Hi / Lo / S-Lo)	dB(A)	42 / 32 / 29	42 / 32 / 29	43 / 32 / 29	44 / 34 / 31
Sound power level	Cooling / Heating (Hi)	dB	53 / 55	53 / 55	54 / 56	56 / 57
Dimensions	Indoor (H x W x D)	mm	185 x 770 x 360	185 x 770 x 360	185 x 770 x 360	185 x 770 x 360
Dimensions	Panel (H x W x D)	mm	55 x 1.070 x 460	55 x 1.070 x 460	55 x 1.070 x 460	55 x 1.070 x 460
Net weight	Indoor	kg	9,8	9,8	9,8	9,8
Piping connections	Liquid / Gas pipe	inch (mm)	1/4" (6,35) / 3/8" (9,52)	1/4" (6,35) / 3/8" (9,52)	1/4" (6,35) / 3/8" (9,52)	1/4" (6,35) / 3/8" (9,52)

silent air 23 dB SUPER QUIET

FLOOR CONSOLE // INVERTER+			2,8 KW	3,2 KW	5 KW
Indoor			CS-E9GFEW	CS-E12GFEW	CS-E18GFEW 1)
Cooling capacity	Nominal	kW / kCal/h	2,80 / 2.410	3,20 / 2.750	5,00 / 4.300
Heating capacity	Nominal	kW / kCal/h	4,00 / 3.440	4,50 / 3.870	6,80 / 5.850
Connection		mm²	4 x 1,5	4 x 1,5	4 x 1,5
Sound pressure level 2)	Cooling (Hi / Lo / S-Lo)	dB(A)	38 / 27 / 23	39 / 28 / 24	44 / 36 / 32
	Heating (Hi / Lo / S-Lo)	dB(A)	38 / 27 / 23	39 / 27 / 23	46 / 36 / 32
Sound power level	Cooling / Heating (Hi)	dB	54 / 54	55 / 55	60 / 62
Dimensions	H x W x D	mm	600 x 700 x 210	600 x 700 x 210	600 x 700 x 210
Net weight		kg	14	14	14
Piping connections	Liquid / Gas pipe	inch (mm)	1/4" (6,35) / 3/8" (9,52)	1/4" (6,35) / 3/8" (9,52)	1/4" (6,35) / 1/2" (12,70)

prevention allergy filter ALLERU-BUSTER

OPTIONAL

FLOOR/CEILING CONSOLE // INVERTER+			2,8 kW	4 kW	5 kW
Indoor			CS-ME10DTEG	CS-E15DTEW 1)	CS-E18DTEW 1)
Cooling capacity	Nominal	kW / kCal/h	2,80 / 2,408	4,15 / 3.570	5,00 / 4.300
Heating capacity	Nominal	kW / kCal/h	4,00 / 3,440	5,17 / 4.450	6,80 / 5.850
Connection		mm²	4 x 1,5	4 x 1,5	4 x 1,5
Sound pressure level 2)	Cooling (Hi / Lo / S-Lo)	dB(A)	39 / 31 / 28	45 / 37 / 34	46 / 39 / 36
	Heating (Hi / Lo / S-Lo)	dB(A)	40 / 31 / 28	45 / 33 / 30	47 / 35 / 32
Sound power level	Cooling / Heating (Hi)	dB	52 / 53	58 / 58	59 / 60
Dimensions	H x W x D	mm	540 x 1.028 x 200	540 x 1.028 x 200	540 x 1.028 x 200
Net weight		kg	17	17	18
Air purifier filter	Optional		CZ-SA14P	CZ-SA14P	CZ-SA14P
Piping connections	Liquid / Gas pipe	inch (mm)	1/4" (6,35) / 3/8" (9,52)	1/4" (6,35) / 1/2" (12,70)	1/4" (6,35) / 1/2" (12,70)

OUTDOOR UNITS FOR FREE MULTI COMBINATIONS

CU-2E15LBE CU-2E18LBE CU-3E18LBE CU-4E23LBE

A class energy saving INVERTER+ · down to -15°C in heating mode OUTDOOR TEMPERATURE

OUTDOOR UNIT //INVERTER+			4,0 to 5,6 kW	4,0 to 6,4 kW	4,5 to 9,0 kW	4,5 to 11,0 kW	4,5 to 13,6 kW
Unit			CU-2E15LBE	CU-2E18LBE	CU-3E18LBE	CU-4E23LBE	CU-4E27CBPG
Cooling capacity	Nominal (Min - Max)	kW	4,50 (1,50-5,20)	5,20 (1,50-5,40)	5,20 (1,80-7,30)	6,80 (1.90-8,80)	8,00 (3,00-9,20)
	Nominal (Min - Max)	kCal/h	3.870 (1.290-4.470)	4.470 (1.290-4.640)	4.470 (1.550-6.280)	5.850 (1.630-7.570)	6.880 (2.580-7.910)
EER 3)	Nominal	Energy Saving	3,66 A	3,42 A	4,33 A	4,05 A	4,04 A
Power input Cooling	Nominal (Min - Max)	kW	1,23 (0,25-1,52)	1,52 (0,25-1,58)	1,21 (0,36-2,18)	1,68 (0,34-2,47)	1,98 (0,53-2,87)
Heating capacity	Nominal (Min - Max)	kW	5,40 (1,10-7,00)	5,60 (1,10-7,20)	6,80 (1,60-8,30)	8,60 (3,00-10,60)	9,40 (4,20-10,60)
	Nominal (Min - Max)	kCal/h	4.640 (950-6.020)	4.820 (950-6.190)	5.850 (1.380-7.140)	7.400 (2.580-9.120)	8.080 (3.610/-9.120)
COP 3)	Nominal	Energy Saving	4,62 A	4,63 A	4,86 A	4,65 A	4,52 A
Power input Heating	Nominal (Min - Max)	kW	1,17 (0,21-1,67)	1,21 (0,21-1,70)	1,44 (0,32-2,11)	1,85 (0,58-2,60)	2,08 (0,70-3,06)
Current	Cooling / Heating Nominal	A	5,75 / 5,20	7,10 / 5,35	5,30 / 6.50	7,50 / 8,60	8,70 / 9,10
Power source		V	230	230	230	230	230
Sound pressure level 2)	Cooling / Heating (Hi)	dB(A)	47 / 49	49 / 51	46 / 47	48 / 49	48 / 49
Sound power level	Cooling / Heating (Hi)	dB	62 / 64	64 / 66	60 / 61	62 / 63	61 / 62
Dimensions 4)	H x W x D	mm	540 x 780 (+70) x 289	540 x 780 (+70) x 289	795 x 875 (+95) x 320	795 x 875 (+95) x 320	908 x 900 x 320
Net weight		kg	38	38	71	72	73
Piping connections	Liquid pipe	inch (mm)	1/4" (6,35)	1/4" (6,35)	1/4" (6,35)	1/4" (6,35)	1/4" (6,35)
	Gas pipe	inch (mm)	3/8" (9,52)	3/8" (9,52)	3/8" (9,52)	3/8" (9,52)	3/8" (9,52)
Refrigerant Loading	R410A	kg	1,45	1,45	2,64	2,64	3,10
Elevation difference (in/out) 5)	Max	m	10	10	15	15	15
Piping length total	Max	m	30	30	50	60	70
Piping length to one unit	Min / Max	m	3-20	3-20	3-25	3-25	3-25
Piping length without refrigerant increase	Max	m	20	20	30	30	30
Additional gas		g/m	20	20	20	20	20
Operating range 2)	Cooling Min / Max	ºC	16 / 43	16 / 43	-10 / 46	-10 / 46	16 / 43
	Heating Min / Max	ºC	-10 / 24	-10 / 24	-15 / 24	-15 / 24	-10 / 24

GLOBAL REMARKS

Rating conditions	Cooling	Heating
Inside air temperature	27ºC DB / 19ºC WB	20ºC DB
Outside air temperature	35ºC DB / 24ºC WB	7ºC DB / 6ºC WB

DB: Dry Bulb; WB: Wet Bulb

Connectivity restriction : CS-E/XE_MKE units are only compatible with CU-2E15LBE, CU-2E18LBE, CU-3E18LBE, CU-4E23LBE and CU-4E27CBPG outdoor units. No other outdoor unit can be connected.

1) A CZ-MA1P pipe reducer is needed on the E15 and E18, a CZ-MA2P pipe expander is needed on the E21.
2) The Sound pressure level of the units shows the value measured of a position 1 meter in front of the main body. The sound pressure is measured in accordance with Eurovent 6/C/006-97 specification.
3) EER and COP classification is at 230 V in accordance with EU directive 2002/31/EC.
4) Add 70 or 95 mm for piping port.
5) When installing the outdoor unit at a higher position than the indoor unit.

FREE MULTI COMBINATIONS

FREE MULTI 2X1 // OUTDOOR UNIT CU-2E15LBE

Indoor unit	Cooling Capacity (kW)			Input Power (W)	EER	A,C,E,	Current	Moisture Removal	Heating Capacity (kW)			Input Power (W)	COP	A,C,E,	Current
capacity	Room A	Room B	Total (Min,-Max,)	Rating	W/W	kWh	230 V (A)	Volume (l/h)	Room A	Room B	Total (Min,-Max,)	Rating	W/W	kWh	230 V (A)
1 Room															
7	2,00		2,00 (1,10-2,90)	520 (220 -750)	3,85 **A**	260	2,45	1,3	3,20		3,20 (0,70-4,80)	850 (170-1410)	3,76 **A**	425	3,75
9 [1]	2,50		2,50 (1,10-3,50)	670 (220 -1000)	3,73 **A**	335	3,15	1,5	3,60		3,60 (0,70-5,50)	1030 (170-1700)	3,50 B	515	4,55
10 [2]	2,80		2,80 (1,10-3,50)	750 (220 -1000)	3,73 **A**	375	3,50	1,6	4,00		4,00 (0,70-5,50)	1150 (170-1700)	3,48 B	575	5,10
12	3,20		3,20 (1,10-4,00)	920 (220 -1220)	3,48 **A**	460	4,30	1,8	4,50		4,50 (0,70-6,20)	1250 (170-1810)	3,60 B	625	5,55
2 Room															
7 + 7	2,00	2,00	4,00 (1,50-5,00)	1090 (250 -1350)	3,66 **A**	545	5,10	1,3 + 1,3	2,70	2,70	5,40 (1,10-7,00)	1170 (210-1670)	4,62 **A**	585	5,20
7 + 9 [1]	2,00	2,50	4,50 (1,50-5,20)	1230 (250 -1520)	3,66 **A**	615	5,75	1,3 + 1,5	2,40	3,00	5,40 (1,10-7,00)	1170 (210-1670)	4,62 **A**	585	5,20
7 + 10 [2]	1,85	2,65	4,50 (1,50-5,20)	1230 (250 -1520)	3,66 **A**	615	5,75	1,2 + 1,6	2,25	3,15	5,40 (1,10-7,00)	1170 (210-1670)	4,62 **A**	585	5,20
7 + 12	1,75	2,75	4,50 (1,50-5,20)	1230 (250 -1520)	3,66 **A**	615	5,75	1,1 + 1,6	2,10	3,30	5,40 (1,10-7,00)	1170 (210-1670)	4,62 **A**	585	5,20
9 [1] + 9 [1]	2,25	2,25	4,50 (1,50-5,20)	1230 (250 -1520)	3,66 **A**	615	5,75	1,5 + 1,5	2,70	2,70	5,40 (1,10-7,00)	1170 (210-1670)	4,62 **A**	585	5,20
9 [1] + 10 [2]	2,10	2,40	4,50 (1,50-5,20)	1230 (250 -1520)	3,66 **A**	615	5,75	1,4 + 1,5	2,55	2,85	5,40 (1,10-7,00)	1170 (210-1670)	4,62 **A**	585	5,20
10 [2] + 10 [2]	2,25	2,25	4,50 (1,50-5,20)	1230 (250 -1520)	3,66 **A**	615	5,75	1,5 + 1,5	2,70	2,70	5,40 (1,10-7,00)	1170 (210-1670)	4,62 **A**	585	5,20

FREE MULTI 2X1 // OUTDOOR UNIT CU-2E18LBE

Indoor unit	Cooling Capacity (kW)			Input Power (W)	EER	A,C,E,	Current	Moisture Removal	Heating Capacity (kW)			Input Power (W)	COP	A,C,E,	Current
capacity	Room A	Room B	Total (Min,-Max,)	Rating	W/W	kWh	230 V (A)	Volume (l/h)	Room A	Room B	Total (Min,-Max,)	Rating	W/W	kWh	230 V (A)
1 Room															
7	2,00		2,00 (1,10-2,90)	520 (220-750)	3,85 **A**	260	2,45	1,3	3,20		3,20 (0,70-4,80)	850 (170-1410)	3,76 **A**	425	3,75
9 [1]	2,50		2,50 (1,10-3,50)	670 (220-1000)	3,73 **A**	335	3,15	1,5	3,60		3,60 (0,70-5,50)	1030 (170-1700)	3,50 B	515	4,55
10 [2]	2,80		2,80 (1,10-3,50)	750 (220-1000)	3,73 **A**	375	3,50	1,6	4,00		4,00 (0,70-5,50)	1150 (170-1700)	3,48 B	575	5,10
12	3,20		3,20 (1,10-4,00)	920 (220-1220)	3,48 **A**	460	4,30	1,8	4,50		4,50 (0,70-6,20)	1250 (170-1810)	3,60 B	625	5,55
2 Rooms															
7 + 7	2,00	2,00	4,00 (1,50-5,00)	1090 (250-1350)	3,66 **A**	545	5,10	1,3 + 1,3	2,70	2,70	5,40 (1,10-7,00)	1170 (210-1670)	4,62 **A**	585	5,20
7 + 9 [1]	2,00	2,50	4,50 (1,50-5,20)	1230 (250-1520)	3,66 **A**	615	5,75	1,3 + 1,5	2,40	3,00	5,40 (1,10-7,00)	1170 (210-1670)	4,62 **A**	585	5,20
7 + 10 [2]	1,85	2,65	4,50 (1,50-5,20)	1230 (250-1520)	3,66 **A**	615	5,75	1,2 + 1,6	2,25	3,15	5,40 (1,10-7,00)	1170 (210-1670)	4,62 **A**	585	5,20
7 + 12	1,85	2,95	4,80 (1,50-5,30)	1310 (250-1540)	3,66 **A**	655	6,10	1,2 + 1,7	2,15	3,45	5,60 (1,10-7,20)	1230 (210-1720)	4,55 **A**	615	5,45
9 [1] + 9 [1]	2,40	2,40	4,80 (1,50-5,20)	1310 (250-1520)	3,66 **A**	655	6,10	1,5 + 1,5	2,80	2,80	5,60 (1,10-7,20)	1250 (210-1740)	4,48 **A**	625	5,55
9 [1] + 10 [2]	2,25	2,55	4,80 (1,50-5,20)	1310 (250-1520)	3,66 **A**	655	6,10	1,5 + 1,6	2,65	2,95	5,60 (1,10-7,20)	1250 (210-1740)	4,48 **A**	625	5,55
9 [1] + 12	2,20	2,80	5,00 (1,50-5,30)	1490 (250-1540)	3,36 **A**	745	6,95	1,4 + 1,6	2,45	3,15	5,60 (1,10-7,20)	1230 (210-1720)	4,55 **A**	615	5,45
10 [2] + 10 [2]	2,40	2,40	4,80 (1,50-5,20)	1310 (250-1520)	3,66 **A**	655	6,10	1,5 + 1,5	2,80	2,80	5,60 (1,10-7,20)	1250 (210-1740)	4,48 **A**	625	5,55
10 [2] + 12	2,35	2,65	5,00 (1,50-5,30)	1490 (250-1540)	3,36 **A**	745	6,95	1,5 + 1,6	2,60	3,00	5,60 (1,10-7,20)	1230 (210-1720)	4,55 **A**	615	5,45
12 + 12	2,60	2,60	5,20 (1,50-5,40)	1520 (250-1580)	3,42 **A**	760	7,10	1,6 + 1,6	2,80	2,80	5,60 (1,10-7,20)	1210 (210-1700)	4,63 **A**	605	5,35

FREE MULTI 3X1 // OUTDOOR UNIT CU-3E18LBE

Indoor unit	Cooling Capacity (kW)				Input Power (W)	EER	A,C,E,	Current	Moisture Removal	Heating Capacity (kW)				Input Power (W)	COP	A,C,E,	Current
capacity	Room A	Room B	Room C	Total (Min,-Max,)	Rating	W/W	kWh	230 V (A)	Volume (l/h)	Room A	Room B	Room C	Total (Min,-Max,)	Rating	W/W	kWh	230 V (A)
1 Room																	
7	2,00			2,00 (1,80-2,90)	500 (340-810)	4,00 **A**	250	2,5	1,3	3,20			3,20 (1,20-4,10)	740 (300-1230)	4,32 **A**	370	3,7
9 [1]	2,50			2,50 (1,80-2,90)	630 (340-810)	4,00 **A**	315	3,0	1,5	3,60			3,60 (1,20-4,30)	940 (300-1230)	3,83 **A**	470	4,5
10 [2]	2,80			2,80 (1,80-2,90)	700 (340-810)	4,00 **A**	350	3,3	1,6	4,00			4,00 (1,20-4,30)	1050 (300-1230)	3,81 **A**	525	5,0
12	3,20			3,20 (1,80-3,80)	800 (340-1360)	4,00 **A**	400	3,7	1,8	4,50			4,50 (1,20-5,80)	1230 (300-2100)	3,66 **A**	615	5,8
15	4,00			4,00 (1,80-4,30)	1240 (340-1990)	3,23 **A**	620	5,6	2,3	5,60			5,60 (1,20-6,80)	1720 (300-2930)	3,26 C	860	7,7
18	5,00			5,00 (1,90-5,70)	1550 (340-2130)	3,23 **A**	775	6,8	2,7	6,80			6,80 (1,20-6,90)	2100 (300-2520)	3,24 C	1050	9,2
2 Rooms																	
7 + 7	2,00	2,00		4,00 (1,90-6,20)	1010 (350-2100)	3,96 **A**	505	4,5	1,3 + 1,3	2,90	2,90		5,80 (1,40-7,00)	1450 (310-2550)	4,00 **A**	725	6,4
7 + 9 [1]	2,00	2,50		4,50 (1,90-6,20)	1270 (350-2100)	3,55 **A**	635	5,6	1,3 + 1,5	2,84	3,56		6,40 (1,40-7,00)	1720 (310-2550)	3,72 **A**	860	7,6
7 + 10 [2]	2,00	2,80		4,80 (1,90-6,20)	1350 (350-2100)	3,55 **A**	675	6,0	1,3 + 1,6	2,67	3,73		6,40 (1,40-7,00)	1720 (310-2550)	3,72 **A**	860	7,6
7 + 12	2,00	3,20		5,20 (1,90-6,30)	1490 (350-2110)	3,49 **A**	745	6,6	1,3 + 1,8	2,62	4,18		6,80 (1,40-7,30)	1840 (310-2520)	3,70 **A**	920	8,2
7 + 15	1,73	3,47		5,20 (1,90-6,40)	1450 (350-2110)	3,59 **A**	725	6,4	1,1 + 2,0	2,27	4,53		6,80 (1,40-7,30)	1800 (310-2510)	3,78 **A**	900	7,9
7 + 18	1,49	3,71		5,20 (1,90-6,80)	1290 (360-2150)	4,03 **A**	645	5,7	0,9 + 2,2	1,94	4,86		6,80 (1,40-8,00)	1520 (310-2200)	4,47 **A**	760	6,7
9 [1] + 9 [1]	2,50	2,50		5,00 (1,90-6,20)	1540 (350-2100)	3,25 **A**	770	6,8	1,5 + 1,5	3,40	3,40		6,80 (1,40-7,00)	1930 (310-2550)	3,52 B	965	8,5
9 [1] + 10 [2]	2,45	2,75		5,20 (1,90-6,20)	1540 (350-2100)	3,38 **A**	770	6,8	1,5 + 1,6	3,21	3,59		6,80 (1,40-7,00)	1930 (310-2550)	3,52 B	965	8,5
9 [1] + 12	2,28	2,92		5,20 (1,90-6,30)	1480 (350-2110)	3,51 **A**	740	6,5	1,5 + 1,7	2,98	3,82		6,80 (1,40-7,30)	1840 (310-2520)	3,70 **A**	920	8,1
9 [1] + 15	2,00	3,20		5,20 (1,90-6,40)	1440 (350-2110)	3,61 **A**	720	6,4	1,3 + 1,8	2,62	4,18		6,80 (1,40-7,30)	1800 (310-2510)	3,78 **A**	900	8,0
9 [1] + 18	1,73	3,47		5,20 (1,90-6,80)	1290 (360-2150)	4,03 **A**	645	5,7	1,1 + 2,0	2,27	4,53		6,80 (1,40-8,00)	1520 (310-2200)	4,47 **A**	760	6,7
10 [2] + 10 [2]	2,60	2,60		5,20 (1,90-6,20)	1540 (350-2100)	3,38 **A**	770	6,8	1,6 + 1,6	3,40	3,40		6,80 (1,40-7,00)	1930 (310-2550)	3,52 B	965	8,5
10 [2] + 12	2,43	2,77		5,20 (1,90-6,30)	1480 (350-2110)	3,51 **A**	740	6,5	1,5 + 1,6	3,17	3,63		6,80 (1,40-7,30)	1840 (310-2520)	3,70 **A**	920	8,1
10 [2] + 15	2,14	3,06		5,20 (1,90-6,40)	1440 (350-2110)	3,61 **A**	720	6,4	1,4 + 1,7	2,80	4,00		6,80 (1,40-7,30)	1800 (310-2510)	3,78 **A**	900	8,0
10 [2] + 18	1,87	3,33		5,20 (1,90-6,80)	1290 (360-2150)	4,03 **A**	645	5,7	1,2 + 1,9	2,44	4,36		6,80 (1,40-8,00)	1520 (310-2200)	4,47 **A**	760	6,7
12 + 12	2,60	2,60		5,20 (1,90-6,40)	1450 (350-2120)	3,59 **A**	725	6,4	1,6 + 1,6	3,40	3,40		6,80 (1,40-7,50)	1750 (310-2490)	3,89 **A**	875	7,7
12 + 15	2,31	2,89		5,20 (1,90-6,50)	1410 (350-2120)	3,69 **A**	705	6,3	1,5 + 1,7	3,02	3,78		6,80 (1,40-7,50)	1750 (310-2470)	3,89 **A**	875	7,8
12 + 18	2,03	3,17		5,20 (1,90-6,90)	1250 (360-2150)	4,16 **A**	625	5,5	1,3 + 1,8	2,65	4,15		6,80 (1,40-8,00)	1500 (310-2180)	4,53 **A**	750	6,6
15 + 15	2,60	2,60		5,20 (1,90-6,50)	1410 (350-2120)	3,69 **A**	705	6,2	1,6 + 1,6	3,40	3,40		6,80 (1,40-7,60)	1710 (310-2470)	3,98 **A**	855	7,5
15 + 18	2,31	2,89		5,20 (1,90-6,90)	1250 (360-2160)	4,16 **A**	625	5,5	1,5 + 1,7	3,02	3,78		6,80 (1,40-8,00)	1500 (310-2170)	4,53 **A**	750	6,6
3 Rooms																	
7 + 7 + 7	1,73	1,73	1,73	5,19 (1,90-7,20)	1220 (360-2170)	4,25 **A**	610	5,3	1,1 + 1,1 + 1,1	2,26	2,26	2,26	6,78 (1,50-8,10)	1510 (320-2120)	4,49 **A**	755	6,7
7 + 7 + 9 [1]	1,60	1,60	2,00	5,20 (1,90-7,20)	1220 (360-2170)	4,26 **A**	610	5,3	1,0 + 1,0 + 1,3	2,09	2,09	2,62	6,80 (1,50-8,10)	1510 (320-2120)	4,50 **A**	755	6,7
7 + 7 + 10 [2]	1,53	1,53	2,14	5,20 (1,90-7,20)	1220 (360-2170)	4,26 **A**	610	5,3	1,0 + 1,0 + 1,4	2,00	2,00	2,80	6,80 (1,50-8,10)	1510 (320-2120)	4,50 **A**	755	6,7
7 + 7 + 12	1,44	1,44	2,32	5,20 (1,90-7,20)	1210 (360-2180)	4,30 **A**	605	5,3	0,9 + 0,9 + 1,5	1,89	1,89	3,02	6,80 (1,40-8,30)	1470 (320-2110)	4,63 **A**	735	6,5
7 + 7 + 15	1,30	1,30	2,60	5,20 (1,80-7,30)	1210 (360-2180)	4,30 **A**	605	5,3	0,8 + 0,8 + 1,6	1,70	1,70	3,40	6,80 (1,60-8,30)	1440 (320-2110)	4,72 **A**	720	6,4
7 + 7 + 18	1,16	1,16	2,88	5,20 (1,80-7,30)	1200 (360-2180)	4,33 **A**	600	5,3	0,7 + 0,7 + 1,7	1,51	1,51	3,78	6,80 (1,60-8,30)	1400 (320-2110)	4,86 **A**	700	6,5
7 + 9 [1] + 9 [1]	1,48	1,86	1,86	5,20 (1,90-7,20)	1220 (360-2170)	4,26 **A**	610	5,3	0,9 + 1,2 + 1,2	1,94	2,43	2,43	6,80 (1,50-8,10)	1510 (320-2120)	4,50 **A**	755	6,7
7 + 9 [1] + 10 [2]	1,42	1,78	2,00	5,20 (1,90-7,20)	1220 (360-2170)	4,26 **A**	610	5,3	0,9 + 1,1 + 1,3	1,86	2,33	2,61	6,80 (1,50-8,10)	1510 (320-2120)	4,50 **A**	755	6,7
7 + 9 [1] + 12	1,35	1,69	2,16	5,20 (1,90-7,20)	1210 (360-2180)	4,30 **A**	605	5,3	0,9 + 1,1 + 1,4	1,76	2,21	2,83	6,80 (1,40-8,30)	1470 (320-2110)	4,63 **A**	735	6,5
7 + 9 [1] + 15	1,22	1,53	2,45	5,20 (1,80-7,30)	1200 (360-2180)	4,33 **A**	600	5,3	0,8 + 1,0 + 1,5	1,60	2,00	3,20	6,80 (1,60-8,30)	1400 (320-2110)	4,86 **A**	700	6,5
7 + 10 [2] + 10 [2]	1,36	1,92	1,92	5,20 (1,90-7,20)	1220 (360-2170)	4,26 **A**	610	5,3	0,9 + 1,2 + 1,2	1,78	2,51	2,51	6,80 (1,50-8,10)	1510 (320-2120)	4,50 **A**	755	6,7
7 + 10 [2] + 12	1,30	1,82	2,08	5,20 (1,90-7,20)	1210 (360-2180)	4,30 **A**	605	5,3	0,8 + 1,2 + 1,3	1,70	2,38	2,72	6,80 (1,40-8,30)	1470 (320-2110)	4,63 **A**	735	6,5
7 + 10 [2] + 15	1,18	1,65	2,37	5,20 (1,80-7,30)	1200 (360-2180)	4,33 **A**	600	5,3	0,7 + 1,1 + 1,5	1,55	2,16	3,09	6,80 (1,60-8,30)	1400 (320-2110)	4,86 **A**	700	6,5
7 + 12 + 12	1,24	1,98	1,98	5,20 (1,80-7,30)	1200 (360-2180)	4,33 **A**	600	5,3	0,8 + 1,3 + 1,3	1,62	2,59	2,59	6,80 (1,60-8,30)	1410 (320-2100)	4,82 **A**	705	6,3
9 [1] + 9 [1] + 9 [1]	1,73	1,73	1,73	5,19 (1,90-7,20)	1220 (360-2170)	4,25 **A**	610	5,3	1,1 + 1,1 + 1,1	2,26	2,26	2,26	6,78 (1,50-8,10)	1510 (320-2120)	4,49 **A**	755	6,7
9 [1] + 9 [1] + 10 [2]	1,67	1,67	1,86	5,20 (1,90-7,20)	1220 (360-2170)	4,26 **A**	610	5,3	1,1 + 1,1 + 1,2	2,18	2,18	2,44	6,80 (1,50-8,10)	1510 (320-2120)	4,50 **A**	755	6,7
9 [1] + 9 [1] + 12	1,59	1,59	2,02	5,20 (1,90-7,20)	1210 (360-2180)	4,30 **A**	605	5,3	1,0 + 1,0 + 1,3	2,07	2,07	2,66	6,80 (1,40-8,30)	1470 (320-2110)	4,63 **A**	735	6,5
9 [1] + 9 [1] + 15	1,44	1,44	2,32	5,20 (1,80-7,30)	1200 (360-2180)	4,33 **A**	600	5,3	0,9 + 0,9 + 1,5	1,89	1,89	3,02	6,80 (1,60-8,30)	1400 (320-2110)	4,86 **A**	700	6,5
9 [1] + 10 [2] + 10 [2]	1,60	1,80	1,80	5,20 (1,90-7,20)	1220 (360-2170)	4,26 **A**	610	5,3	1,0 + 1,2 + 1,2	2,10	2,35	2,35	6,80 (1,50-8,10)	1510 (320-2120)	4,50 **A**	755	6,7
9 [1] + 10 [2] + 12	1,53	1,71	1,96	5,20 (1,90-7,20)	1210 (360-2180)	4,30 **A**	605	5,3	1,0 + 1,1 + 1,3	2,00	2,24	2,56	6,80 (1,40-8,30)	1470 (320-2110)	4,63 **A**	735	6,5
9 [1] + 12 + 12	1,46	1,87	1,87	5,20 (1,80-7,30)	1200 (360-2180)	4,33 **A**	600	5,3	0,9 + 1,2 + 1,2	1,92	2,44	2,44	6,80 (1,60-8,30)	1410 (320-2100)	4,82 **A**	705	6,3
10 [2] + 10 [2] + 10 [2]	1,73	1,73	1,73	5,19 (1,90-7,20)	1220 (360-2170)	4,25 **A**	610	5,3	1,1 + 1,1 + 1,1	2,26	2,26	2,26	6,78 (1,50-8,10)	1510 (320-2120)	4,49 **A**	755	6,7
10 [2] + 10 [2] + 12	1,65	1,65	1,90	5,20 (1,90-7,2)	1210 (360-2180)	4,30 **A**	605	5,3	1,1 + 1,1 + 1,2	2,16	2,16	2,48	6,80 (1,40-8,30)	1470 (320-2110)	4,63 **A**	735	6,5

FREE MULTI 4X1 // OUTDOOR UNIT CU-4E23LBE

Indoor unit	Cooling Capacity (kW)					Input Power (W)	EER	A,C,E,	Current	Moisture Removal	Heating Capacity (kW)					Input Power (W)	COP	A,C,E,	Current
capacity	Room A	Room B	Room C	Room D	Total (Min,-Max,)	Rating	W/W	kWh	230 V (A)	Volume (l/h)	Room A	Room B	Room C	Room D	Total (Min,-Max,)	Rating	W/W	kWh	230 V (A)
1 Room																			
7	2,00				2,00 (1,80-2,90)	500 (340-810)	4,00 **A**	250	2,5	1,3	3,20				3,20 (1,20-4,10)	740 (300-1230)	4,32 **A**	**370**	3,7
9 [1]	2,50				2,50 (1,80-2,90)	630 (340-810)	4,00 **A**	315	3,2	1,5	3,60				3,60 (1,20-4,30)	940 (300-1230)	3,83 **A**	**470**	4,7
10 [2]	2,80				2,80 (1,80-2,90)	700 (340-810)	4,00 **A**	350	3,5	1,6	4,00				4,00 (1,20-4,30)	1050 (300-1230)	3,81 **A**	**525**	5,2
12	3,20				3,20 (1,80-3,80)	800 (340-1360)	4,00 **A**	400	3,9	1,8	4,50				4,50 (1,20-5,80)	1230 (300-2100)	3,66 **A**	**615**	6,0
15	4,00				4,00 (1,80-4,30)	1240 (340-1990)	3,23 **A**	620	5,8	2,3	5,60				5,60 (1,20-6,80)	1720 (300-2930)	3,26 C	860	8,0
18	5,00				5,00 (1,90-5,70)	1550 (340-2130)	3,23 **A**	775	7,2	2,7	6,80				6,80 (1,20-6,90)	2100 (300-2520)	3,24 C	1050	9,7
21	6,00				6,00 (1,90-6,20)	2030 (340-2330)	2,96 C	1015	9,2	3,3	8,50				8,50 (1,30-9,00)	2400 (620-2530)	3,54 B	1200	11,1
2 Room																			
7 + 7	2,00	2,00			4,00 (1,90-6,40)	1010 (340-2150)	3,96 **A**	505	4,5	1,3 + 1,3	2,90	2,90			5,80 (2,70-9,80)	1450 (610-2800)	4,00 **A**	**725**	6,7
7 + 9 [1]	2,00	2,50			4,50 (1,90-6,40)	1270 (340-2150)	3,55 **A**	635	5,7	1,3 + 1,5	2,71	3,39			6,10 (2,70-9,80)	1640 (610-2800)	3,72 **A**	**820**	7,6
7 + 10 [2]	2,00	2,80			4,80 (1,90-6,40)	1350 (340-2150)	3,55 **A**	675	6,1	1,3 + 1,6	2,67	3,73			6,40 (2,70-9,80)	1720 (610-2800)	3,72 **A**	**860**	8,0
7 + 12	2,00	3,20			5,20 (1,90-6,90)	1510 (340-2410)	3,44 **A**	755	6,8	1,3 + 1,8	2,69	4,31			7,00 (2,70-9,90)	1840 (590-2800)	3,80 **A**	**920**	8,5
7 + 15	2,00	4,00			6,00 (1,90-6,90)	1810 (330-2410)	3,32 **A**	905	8,1	1,3 + 2,3	2,73	5,47			8,20 (2,70-9,90)	2210 (590-2800)	3,71 **A**	**1105**	10,2
7 + 18	1,94	4,86			6,80 (2,00-7,50)	1800 (320-2440)	3,78 **A**	900	8,1	1,3 + 2,6	2,46	6,14			8,60 (2,80-10,20)	2140 (530-2760)	4,02 **A**	**1070**	9,9
7 + 21	1,70	5,10			6,80 (2,00-7,50)	1800 (320-2440)	3,78 **A**	900	8,1	1,1 + 2,8	2,15	6,45			8,60 (2,80-10,20)	2290 (530-2760)	3,76 **A**	**1145**	10,6
9 [1] + 9 [1]	2,50	2,50			5,00 (1,90-6,80)	1380 (340-2400)	3,61 **A**	690	6,2	1,5 + 1,5	3,20	3,20			6,40 (2,70-9,80)	1700 (610-2800)	3,77 **A**	**850**	7,8
9 [1] + 10 [2]	2,50	2,80			5,30 (1,90-6,80)	1470 (340-2400)	3,61 **A**	735	6,6	1,5 + 1,6	3,30	3,70			7,00 (2,70-9,80)	1860 (610-2800)	3,77 **A**	**930**	8,6
9 [1] + 12	2,50	3,20			5,70 (1,90-6,90)	1660 (340-2410)	3,43 **A**	830	7,4	1,5 + 1,8	3,55	4,55			8,10 (2,70-9,90)	2170 (590-2800)	3,73 **A**	**1085**	10,0
9 [1] + 15	2,50	4,00			6,50 (1,90-6,90)	2070 (330-2410)	3,13 B	1035	9,2	1,5 + 2,3	3,31	5,29			8,60 (2,70-9,90)	2320 (590-2800)	3,71 **A**	**1160**	10,7
9 [1] + 18	2,27	4,53			6,80 (1,90-7,50)	1970 (320-2440)	3,45 **A**	985	8,8	1,5 + 2,5	2,87	5,73			8,60 (2,80-10,20)	2140 (530-2760)	4,02 **A**	**1070**	9,9
9 [1] + 21	2,00	4,80			6,80 (1,90-7,50)	1970 (320-2440)	3,45 **A**	985	8,8	1,3 + 2,6	2,53	6,07			8,60 (2,80-10,20)	2140 (530-2760)	4,02 **A**	**1070**	9,9
10 [2] + 10 [2]	2,80	2,80			5,60 (1,90-6,80)	1550 (340-2400)	3,61 **A**	775	6,9	1,6 + 1,6	4,00	4,00			8,00 (2,70-9,80)	2120 (610-2800)	3,77 **A**	**1060**	9,8
10 [2] + 12	2,80	3,20			6,00 (1,90-6,90)	1750 (340-2410)	3,43 **A**	875	7,8	1,6 + 1,8	3,97	4,53			8,50 (2,70-9,90)	2280 (590-2800)	3,73 **A**	**1140**	10,5
10 [2] + 15	2,80	4,00			6,80 (1,90-6,90)	2170 (330-2410)	3,13 B	1085	9,7	1,6 + 2,3	3,54	5,06			8,60 (2,70-9,90)	2320 (590-2800)	3,71 **A**	**1160**	10,7
10 [2] + 18	2,44	4,36			6,80 (1,90-7,50)	1970 (320-2440)	3,45 **A**	985	8,8	1,5 + 2,4	3,09	5,51			8,60 (2,80-10,20)	2140 (530-2760)	4,02 **A**	**1070**	9,9
10 [2] + 21	2,16	4,64			6,80 (1,90-7,50)	1970 (320-2440)	3,45 **A**	985	8,8	1,4 + 2,5	2,74	5,86			8,60 (2,80-10,20)	2140 (530-2760)	4,02 **A**	**1070**	9,9
12 + 12	3,20	3,20			6,40 (1,90-7,00)	1960 (330-2420)	3,27 **A**	980	8,8	1,8 + 1,8	4,30	4,30			8,60 (2,80-10,00)	2270 (580-2800)	3,79 **A**	**1135**	10,5
12 + 15	3,02	3,78			6,80 (1,90-7,10)	2070 (330-2420)	3,29 **A**	1035	9,3	1,7 + 2,2	3,82	4,78			8,60 (2,80-10,00)	2270 (570-2800)	3,79 **A**	**1135**	10,5
12 + 18	2,65	4,15			6,80 (2,00-7,60)	1890 (320-2450)	3,60 **A**	945	8,5	1,6 + 2,4	3,36	5,24			8,60 (2,80-10,30)	2090 (520-2740)	4,11 **A**	**1045**	9,7
12 + 21	2,37	4,43			6,80 (2,00-7,60)	1890 (320-2450)	3,60 **A**	945	8,5	1,5 + 2,5	2,99	5,61			8,60 (2,80-10,30)	2090 (520-2740)	4,11 **A**	**1045**	9,7
15 + 15	3,40	3,40			6,80 (1,90-7,10)	2270 (330-2420)	3,00 C	1135	10,2	1,9 + 1,9	4,30	4,30			8,60 (2,80-10,00)	2260 (560-2800)	3,81 **A**	**1130**	10,5
15 + 18	3,02	3,78			6,80 (2,00-7,60)	1890 (320-2450)	3,60 **A**	945	8,5	1,7 + 2,2	3,82	4,78			8,60 (2,80-10,30)	2080 (510-2740)	4,13 **A**	**1040**	9,6
15 + 21	2,72	4,08			6,80 (2,00-7,60)	1890 (320-2450)	3,60 **A**	945	8,5	1,6 + 2,3	3,44	5,16			8,60 (2,80-10,30)	2080 (510-2740)	4,13 **A**	**1040**	9,6
18 + 18	3,40	3,40			6,80 (2,10-8,10)	1780 (310-2460)	3,82 **A**	890	8,0	1,9 + 1,9	4,30	4,30			8,60 (2,80-10,50)	1960 (480-2650)	4,39 **A**	**980**	9,1
18 + 21	3,09	3,71			6,80 (2,10-8,10)	1780 (310-2460)	3,82 **A**	890	8,0	1,7 + 2,2	3,91	4,69			8,60 (2,80-10,50)	1960 (480-2650)	4,39 **A**	**980**	9,1
3 Room																			
7 + 7 + 7	2,00	2,00	2,00		6,00 (1,90-8,00)	1650 (340-2460)	3,63 **A**	825	7,4	1,3 + 1,3 + 1,3	2,86	2,86	2,86		8,58 (3,30-10,40)	2090 (600-2840)	4,11 **A**	**1045**	9,7
7 + 7 + 9 [1]	2,00	2,00	2,50		6,50 (1,90-8,00)	1830 (340-2460)	3,56 **A**	915	8,2	1,3 + 1,3 + 1,5	2,65	2,65	3,30		8,60 (3,30-10,40)	2090 (600-2840)	4,11 **A**	**1045**	9,7
7 + 7 + 10 [2]	2,00	2,00	2,80		6,80 (1,90-8,00)	1910 (340-2460)	3,56 **A**	955	8,6	1,3 + 1,3 + 1,6	2,53	2,53	3,54		8,60 (3,30-10,40)	2090 (600-2840)	4,11 **A**	**1045**	9,7
7 + 7 + 12	1,89	1,89	3,02		6,80 (1,90-8,00)	1910 (340-2460)	3,56 **A**	955	8,6	1,2 + 1,2 + 1,7	2,39	2,39	3,82		8,60 (3,30-10,40)	2070 (590-2820)	4,15 **A**	**1035**	9,6
7 + 7 + 15	1,70	1,70	3,40		6,80 (1,90-8,10)	1860 (340-2460)	3,66 **A**	930	8,3	1,1 + 1,1 + 1,9	2,15	2,15	4,30		8,60 (3,30-10,50)	2060 (590-2810)	4,17 **A**	**1030**	9,5
7 + 7 + 18	1,51	1,51	3,78		6,80 (2,00-8,50)	1730 (340-2460)	3,93 **A**	865	7,8	1,0 + 1,0 + 2,2	1,91	1,91	4,78		8,60 (3,20-10,60)	1930 (570-2710)	4,46 **A**	**965**	8,9
7 + 7 + 21	1,36	1,36	4,08		6,80 (2,00-8,50)	1730 (340-2460)	3,93 **A**	865	7,8	0,9 + 0,9 + 2,3	1,72	1,72	5,16		8,60 (3,20-10,60)	1930 (570-2710)	4,46 **A**	**965**	8,9
7 + 9 [1] + 9 [1]	1,94	2,43	2,43		6,80 (1,90-8,00)	1910 (340-2460)	3,56 **A**	955	8,6	1,3 + 1,5 + 1,5	2,46	3,07	3,07		8,60 (3,30-10,40)	2090 (600-2840)	4,11 **A**	**1045**	9,7
7 + 9 [1] + 10 [2]	1,86	2,33	2,61		6,80 (1,90-8,00)	1910 (340-2460)	3,56 **A**	955	8,6	1,2 + 1,5 + 1,6	2,35	2,95	3,30		8,60 (3,30-10,40)	2090 (600-2840)	4,11 **A**	**1045**	9,7
7 + 9 [1] + 12	1,76	2,21	2,83		6,80 (1,90-8,00)	1910 (340-2460)	3,56 **A**	955	8,6	1,1 + 1,4 + 1,7	2,23	2,79	3,58		8,60 (3,30-10,40)	2070 (590-2820)	4,15 **A**	**1035**	9,6
7 + 9 [1] + 15	1,60	2,00	3,20		6,80 (1,90-8,10)	1860 (340-2460)	3,66 **A**	930	8,3	1,0 + 1,3 + 1,8	2,02	2,53	4,05		8,60 (3,30-10,50)	2060 (590-2810)	4,17 **A**	**1030**	9,5
7 + 9 [1] + 18	1,43	1,79	3,58		6,80 (2,00-8,50)	1730 (340-2460)	3,93 **A**	865	7,8	0,9 + 1,2 + 2,1	1,81	2,26	4,53		8,60 (3,20-10,60)	1930 (570-2710)	4,46 **A**	**965**	8,9
7 + 9 [1] + 21	1,29	1,62	3,89		6,80 (2,00-8,50)	1730 (340-2460)	3,93 **A**	865	7,8	0,8 + 1,0 + 2,3	1,64	2,05	4,91		8,60 (3,20-10,60)	1930 (570-2710)	4,46 **A**	**965**	8,9
7 + 10 [2] + 10 [2]	1,78	2,51	2,51		6,80 (1,90-8,00)	1910 (340-2460)	3,56 **A**	955	8,6	1,1 + 1,5 + 1,5	2,26	3,17	3,17		8,60 (3,30-10,40)	2090 (600-2840)	4,11 **A**	**1045**	9,7
7 + 10 [2] + 12	1,70	2,38	2,72		6,80 (1,90-8,00)	1910 (340-2460)	3,56 **A**	955	8,6	1,1 + 1,5 + 1,6	2,15	3,01	3,44		8,60 (3,30-10,40)	2070 (590-2820)	4,15 **A**	**1035**	9,6
7 + 10 [2] + 15	1,55	2,16	3,09		6,80 (1,90-8,10)	1860 (340-2460)	3,66 **A**	930	8,3	1,0 + 1,4 + 1,7	1,95	2,74	3,91		8,60 (3,30-10,50)	2060 (590-2810)	4,17 **A**	**1030**	9,5
7 + 10 [2] + 18	1,39	1,94	3,47		6,80 (2,00-8,50)	1730 (340-2460)	3,93 **A**	865	7,8	0,9 + 1,3 + 2,0	1,75	2,46	4,39		8,60 (3,20-10,60)	1930 (570-2710)	4,46 **A**	**965**	8,9
7 + 10 [2] + 21	1,26	1,76	3,78		6,80 (2,00-8,50)	1730 (340-2460)	3,93 **A**	865	7,8	0,8 + 1,1 + 2,2	1,59	2,23	4,78		8,60 (3,20-10,60)	1930 (570-2710)	4,46 **A**	**965**	8,9
7 + 12 + 12	1,62	2,59	2,59		6,80 (1,90-8,10)	1860 (340-2460)	3,66 **A**	930	8,3	1,0 + 1,6 + 1,6	2,04	3,28	3,28		8,60 (3,30-10,50)	2050 (590-2800)	4,20 **A**	**1025**	9,5
7 + 12 + 15	1,47	2,37	2,96		6,80 (1,90-8,20)	1860 (340-2460)	3,66 **A**	930	8,3	0,9 + 1,5 + 1,7	1,87	2,99	3,74		8,60 (3,30-10,50)	2040 (580-2790)	4,22 **A**	**1020**	9,4
7 + 12 + 18	1,33	2,13	3,34		6,80 (2,00-8,50)	1730 (340-2460)	3,93 **A**	865	7,8	0,8 + 1,4 + 1,9	1,68	2,70	4,22		8,60 (3,20-10,60)	1910 (570-2680)	4,50 **A**	**955**	8,8
7 + 15 + 15	1,36	2,72	2,72		6,80 (1,90-8,20)	1820 (340-2460)	3,74 **A**	910	8,2	0,9 + 1,6 + 1,6	1,72	3,44	3,44		8,60 (3,30-10,50)	2030 (580-2780)	4,24 **A**	**1015**	9,4
7 + 15 + 18	1,24	2,47	3,09		6,80 (2,00-8,50)	1730 (340-2460)	3,93 **A**	865	7,8	0,8 + 1,5 + 1,7	1,56	3,13	3,91		8,60 (3,20-10,60)	1910 (570-2680)	4,50 **A**	**955**	8,8
9 [1] + 9 [1] + 9 [1]	2,26	2,26	2,26		6,78 (1,90-8,00)	1910 (340-2460)	3,55 **A**	955	8,6	1,5 + 1,5 + 1,5	2,86	2,86	2,86		8,58 (3,30-10,40)	2090 (600-2840)	4,11 **A**	**1045**	9,7
9 [1] + 9 [1] + 10 [2]	2,18	2,18	2,44		6,80 (1,90-8,00)	1910 (340-2460)	3,56 **A**	955	8,6	1,4 + 1,4 + 1,5	2,76	2,76	3,08		8,60 (3,30-10,40)	2090 (600-2840)	4,11 **A**	**1045**	9,7
9 [1] + 9 [1] + 12	2,07	2,07	2,66		6,80 (1,90-8,00)	1910 (340-2460)	3,56 **A**	955	8,6	1,3 + 1,3 + 1,6	2,62	2,62	3,36		8,60 (3,30-10,40)	2070 (590-2820)	4,15 **A**	**1035**	9,6
9 [1] + 9 [1] + 15	1,89	1,89	3,02		6,80 (1,90-8,10)	1860 (340-2460)	3,66 **A**	930	8,3	1,2 + 1,2 + 1,7	2,39	2,39	3,82		8,60 (3,30-10,50)	2060 (590-2810)	4,17 **A**	**1030**	9,5
9 [1] + 9 [1] + 18	1,70	1,70	3,40		6,80 (2,00-8,50)	1730 (340-2460)	3,93 **A**	865	7,8	1,1 + 1,1 + 1,9	2,15	2,15	4,30		8,60 (3,20-10,60)	1930 (570-2710)	4,46 **A**	**965**	8,9
9 [1] + 9 [1] + 21	1,55	1,55	3,70		6,80 (2,00-8,50)	1730 (340-2460)	3,93 **A**	865	7,8	1,0 + 1,0 + 2,2	1,95	1,95	4,70		8,60 (3,20-10,60)	1930 (570-2710)	4,46 **A**	**965**	8,9
9 [1] + 10 [2] + 10 [2]	2,10	2,35	2,35		6,80 (1,90-8,00)	1910 (340-2460)	3,56 **A**	955	8,6	1,4 + 1,5 + 1,5	2,66	2,97	2,97		8,60 (3,30-10,40)	2090 (600-2840)	4,11 **A**	**1045**	9,7
9 [1] + 10 [2] + 12	2,00	2,24	2,56		6,80 (1,90-8,00)	1910 (340-2460)	3,56 **A**	955	8,6	1,3 + 1,5 + 1,6	2,53	2,83	3,24		8,60 (3,30-10,40)	2070 (590-2820)	4,15 **A**	**1035**	9,6
9 [1] + 10 [2] + 15	1,83	2,05	2,92		6,80 (1,90-8,10)	1860 (340-2460)	3,66 **A**	930	8,3	1,2 + 1,3 + 1,7	2,31	2,59	3,70		8,60 (3,30-10,50)	2060 (590-2810)	4,17 **A**	**1030**	9,5
9 [1] + 10 [2] + 18	1,65	1,85	3,30		6,80 (2,00-8,50)	1730 (340-2460)	3,93 **A**	865	7,8	1,1 + 1,2 + 1,9	2,09	2,34	4,17		8,60 (3,20-10,60)	1930 (570-2710)	4,46 **A**	**965**	8,9
9 [1] + 12 + 12	1,92	2,44	2,44		6,80 (1,90-8,10)	1860 (340-2460)	3,66 **A**	930	8,3	1,2 + 1,5 + 1,5	2,42	3,09	3,09		8,60 (3,30-10,50)	2050 (590-2800)	4,20 **A**	**1025**	9,5
9 [1] + 12 + 15	1,75	2,24	2,81		6,80 (1,90-8,20)	1860 (340-2460)	3,66 **A**	930	8,3	1,1 + 1,5 + 1,6	2,21	2,84	3,55		8,60 (3,30-10,50)	2040 (580-2790)	4,22 **A**	**1020**	9,4
9 [1] + 12 + 18	1,59	2,03	3,18		6,80 (2,00-8,50)	1730 (340-2460)	3,93 **A**	865	7,8	1,0 + 1,3 + 1,8	2,01	2,57	4,02		8,60 (3,20-10,60)	1910 (570-2680)	4,50 **A**	**955**	8,8
9 [1] + 15 + 15	1,62	2,59	2,59		6,80 (1,90-8,20)	1820 (340-2460)	3,74 **A**	910	8,2	1,0 + 1,6 + 1,6	2,04	3,28	3,28		8,60 (3,30-10,50)	2030 (580-2780)	4,24 **A**	**1015**	9,4
10 [2] + 10 [2] + 10 [2]	2,26	2,26	2,26		6,78 (1,90-8,00)	1910 (340-2460)	3,55 **A**	955	8,6	1,5 + 1,5 + 1,5	2,86	2,86	2,86		8,58 (3,30-10,40)	2090 (600-2840)	4,11 **A**	**1045**	9,7
10 [2] + 10 [2] + 12	2,16	2,16	2,48		6,80 (1,90-8,00)	1910 (340-2460)	3,56 **A**	955	8,6	1,4 + 1,4 + 1,5	2,74	2,74	3,12		8,60 (3,30-10,40)	2070 (590-2820)	4,15 **A**	**1035**	9,6
10 [2] + 10 [2] + 15	1,98	1,98	2,84		6,80 (1,90-8,10)	1860 (340-2460)	3,66 **A**	930	8,3	1,3 + 1,3 + 1,7	2,51	2,51	3,58		8,60 (3,30-10,50)	2060 (590-2810)	4,17 **A**	**1030**	9,5
10 [2] + 10 [2] + 18	1,80	1,80	3,20		6,80 (2,00-8,50)	1730 (340-2460)	3,93 **A**	865	7,8	1,2 + 1,2 + 1,8	2,27	2,27	4,06		8,60 (3,20-10,60)	1930 (570-2710)	4,46 **A**	**965**	8,9
10 [2] + 12 + 12	2,06	2,37	2,37		6,80 (1,90-8,10)	1860 (340-2460)	3,66 **A**	930	8,3	1,3 + 1,5 + 1,5	2,62	2,99	2,99		8,60 (3,30-10,50)	2050 (590-2800)	4,20 **A**	**1025**	9,5
10 [2] + 12 + 15	1,90	2,18	2,72		6,80 (1,90-8,20)	1860 (340-2460)	3,66 **A**	930	8,3	1,2 + 1,4 + 1,6	2,41	2,75	3,44		8,60 (3,30-10,50)	2040 (580-2790)	4,22 **A**	**1020**	9,4
10 [2] + 12 + 18	1,73	1,98	3,09		6,80 (2,00-8,50)	1730 (340-2460)	3,93 **A**	865	7,8	1,1 + 1,3 + 1,7	2,19	2,50	3,91		8,60 (3,20-10,60)	1910 (570-2680)	4,50 **A**	**955**	8,8
10 [2] + 15 + 15	1,76	2,52	2,52		6,80 (1,90-8,20)	1820 (340-2460)	3,74 **A**	910	8,2	1,1 + 1,5 + 1,5	2,22	3,19	3,19		8,60 (3,30-10,50)	2030 (580-2780)	4,24 **A**	**1015**	9,4
12 + 12 + 12	2,26	2,26	2,26		6,78 (1,90-8,20)	1820 (340-2460)	3,73 **A**	910	8,2	1,5 + 1,5 + 1,5	2,86	2,86	2,86		8,58 (3,30-10,50)	1990 (580-2770)	4,31 **A**	**995**	9,2
12 + 12 + 15	2,09	2,09	2,62		6,80 (1,90-8,20)	1820 (340-2460)	3,74 **A**	910	8,2	1,4 + 1,4 + 1,6	2,65	2,65	3,30		8,60 (3,30-10,50)	1980 (580-2760)	4,34 **A**	**990**	9,2
4 Room																			
7 + 7 + 7 + 7	1,70	1,70	1,70	1,70	6,80 (1,90-8,70)	1690 (340-2460)	4,02 **A**	845	7,6	1,1 + 1,1 + 1,1 + 1,1	2,15	2,15	2,15	2,15	8,60 (3,10-10,60)	1870 (580-2620)	4,60 **A**	**935**	8,6
7 + 7 + 7 + 9 [1]	1,60	1,60	1,60	2,00	6,80 (1,90-8,70)	1690 (340-2460)	4,02 **A**	845	7,6	1,0 + 1,0 + 1,0 + 1,3	2,02	2,02	2,02	2,54	8,60 (3,10-10,60)	1870 (580-2620)	4,60 **A**	**935**	8,6
7 + 7 + 7 + 10 [2]	1,55	1,55	1,55	2,15	6,80 (1,90-8,70)	1690 (340-2460)	4,02 **A**	845	7,6	1,0 + 1,0 + 1,0 + 1,4	1,95	1,95	1,95	2,75	8,60 (3,10-10,60)	1870 (580-2620)	4,60 **A**	**935**	8,6
7 + 7 + 7 + 12	1,48	1,48	1,48	2,36	6,80 (1,90-8,80)	1650 (340-2470)	4,12 **A**	825	7,4	0,9 + 0,9 + 0,9 + 1,5	1,87	1,87	1,87	2,99	8,60 (3,00-10,60)	1850 (580-2600)	4,65 **A**	**925**	8,6
7 + 7 + 7 + 15	1,36	1,36	1,36	2,72	6,80 (1,90-8,80)	1650 (340-2470)	4,12 **A**	825	7,4	0,9 + 0,9 + 0,9 + 1,6	1,72	1,72	1,72	3,44	8,60 (3,00-10,60)	1840 (590-2590)	4,67 **A**	**920**	8,5
7 + 7 + 7 + 18	1,24	1,24	1,24	3,08	6,80 (1,90-8,80)	1680 (340-2470)	4,05 **A**	840	7,5	0,8 + 0,8 + 0,8 + 1,7	1,56	1,56	1,56	3,92	8,60 (3,00-10,60)	1850 (580-2600)	4,65 **A**	**925**	8,6
7 + 7 + 9 [1] + 9 [1]	1,51	1,51	1,89	1,89	6,80 (1,90-8,70)	1690 (340-2460)	4,02 **A**	845	7,6	1,0 + 1,0 + 1,2 + 1,2	1,91	1,91	2,39	2,39	8,60 (3,10-10,60)	1870 (580-2620)	4,60 **A**	**935**	8,6
7 + 7 + 9 [1] + 10 [2]	1,46	1,46	1,83	2,05	6,80 (1,90-8,70)	1690 (340-2460)	4,02 **A**	845	7,6	0,9 + 0,9 + 1,2 + 1,3	1,85	1,85	2,31	2,59	8,60 (3,10-10,60)	1870 (580-2620)	4,60 **A**	**935**	8,6
7 + 7 + 9 [1] + 12	1,40	1,40	1,75	2,25	6,80 (1,90-8,80)	1650 (340-2470)	4,12 **A**	825	7,4	0,9 + 0,9 + 1,1 + 1,5	1,77	1,77	2,22	2,84	8,60 (3,00-10,60)	1850 (580-2600)	4,65 **A**	**925**	8,6
7 + 7 + 9 [1] + 15	1,30	1,30	1,61	2,59	6,80 (1,90-8,80)	1650 (340-2470)	4,12 **A**	825	7,4	0,8 + 0,8 + 1,0 + 1,6	1,64	1,64	2,04	3,28	8,60 (3,00-10,60)	1840 (590-2590)	4,67 **A**	**920**	8,5
7 + 7 + 10 [2] + 10 [2]	1,42	1,42	1,98	1,98	6,80 (1,90-8,70)	1690 (340-2460)	4,02 **A**	845	7,6	0,9 + 0,9 + 1,3 + 1,3	1,79	1,79	2,51	2,51	8,60 (3,10-10,60)	1870 (580-2620)	4,60 **A**	**935**	8,6
7 + 7 + 10 [2] + 12	1,36	1,36	1,90	2,18	6,80 (1,90-8,80)	1650 (340-2470)	4,12 **A**	825	7,4	0,9 + 0,9 + 1,2 + 1,4	1,72	1,72	2,41	2,75	8,60 (3,00-10,60)	1850 (580-2600)	4,65 **A**	**925**	8,6
7 + 7 + 10 [2] + 15	1,26	1,26	1,76	2,52	6,80 (1,90-8,80)	1650 (340-2470)	4,12 **A**	825	7,4	0,8 + 0,8 + 1,1 + 1,5	1,59	1,59	2,23	3,19	8,60 (3,00-10,60)	1840 (590-2590)	4,67 **A**	**920**	8,5
7 + 7 + 12 + 12	1,31	1,31	2,09	2,09	6,80 (1,90-8,80)	1650 (340-2430)	4,12 **A**	825	7,4	0,8 + 0,8 + 1,4 + 1,4	1,65	1,65	2,65	2,65	8,60 (3,00-10,60)	1830 (590-2570)	4,70 **A**	**915**	8,5
7 + 9 [1] + 9 [1] + 9 [1]	1,43	1,79	1,79	1,79	6,80 (1,90-8,70)	1690 (340-2460)	4,02 **A**	845	7,6	0,9 + 1,2 + 1,2 + 1,2	1,82	2,26	2,26	2,26	8,60 (3,10-10,60)	1870 (580-2620)	4,60 **A**	**935**	8,6
7 + 9 [1] + 9 [1] + 10 [2]	1,39	1,73	1,73	1,95	6,80 (1,90-8,70)	1690 (340-2460)	4,02 **A**	845	7,6	0,9 + 1,1 + 1,1 + 1,3	1,76	2,19	2,19	2,46	8,60 (3,10-10,60)	1870 (580-2620)	4,60 **A**	**935**	8,6
7 + 9 [1] + 9 [1] + 12	1,33	1,67	1,67	2,13	6,80 (1,90-8,80)	1650 (340-2470)	4,12 **A**	825	7,4	0,8 + 1,1 + 1,1 + 1,4	1,68	2,11	2,11	2,70	8,60 (3,00-10,60)	1850 (580-2600)	4,65 **A**	**925**	8,6
7 + 9 [1] + 9 [1] + 15	1,23	1,55	1,55	2,47	6,80 (1,90-8,80)	1680 (340-2470)	4,05 **A**	840	7,5	0,8 + 1,0 + 1,0 + 1,5	1,56	1,95	1,95	3,14	8,60 (3,00-10,60)	1850 (590-2600)	4,65 **A**	**925**	8,6
7 + 9 [1] + 10 [2] + 10 [2]	1,34	1,68	1,89	1,89	6,80 (1,90-8,70)	1690 (340-2460)	4,02 **A**	845	7,6	0,8 + 1,1 + 1,2 + 1,2	1,70	2,14	2,38	2,38	8,60 (3,10-10,60)	1870 (580-2620)	4,60 **A**	**935**	8,6
7 + 9 [1] + 10 [2] + 12	1,30	1,62	1,81	2,07	6,80 (1,90-8,80)	1650 (340-2470)	4,12 **A**	825	7,4	0,8 + 1,0 + 1,2 + 1,3	1,64	2,05	2,29	2,62	8,60 (3,00-10,60)	1850 (580-2600)	4,65 **A**	**925**	8,6
7 + 9 [1] + 12 + 12	1,24	1,56	2,00	2,00	6,80 (1,90-8,80)	1650 (340-2430)	4,12 **A**	825	7,4	0,8 + 1,0 + 1,3 + 1,3	1,58	1,98	2,52	2,52	8,60 (3,00-10,60)	1830 (590-2570)	4,70 **A**	**915**	8,5
7 + 10 [2] + 10 [2] + 10 [2]	1,31	1,83	1,83	1,83	6,80 (1,90-8,70)	1690 (340-2460)	4,02 **A**	845	7,6	0,8 + 1,2 + 1,2 + 1,2	1,64	2,32	2,32	2,32	8,60 (3,10-10,60)	1870 (580-2620)	4,60 **A**	**935**	8,6
7 + 10 [2] + 10 [2] + 12	1,26	1,76	1,76	2,02	6,80 (1,90-8,80)	1680 (340-2470)	4,05 **A**	840	7,5	0,8 + 1,1 + 1,1 + 1,3	1,59	2,23	2,23	2,55	8,60 (3,00-10,60)	1850 (580-2600)	4,65 **A**	**925**	8,6
9 [1] + 9 [1] + 9 [1] + 9 [1]	1,70	1,70	1,70	1,70	6,80 (1,90-8,70)	1690 (340-2460)	4,02 **A**	845	7,6	1,1 + 1,1 + 1,1 + 1,1	2,15	2,15	2,15	2,15	8,60 (3,10-10,60)	1870 (580-2620)	4,60 **A**	**935**	8,6
9 [1] + 9 [1] + 9 [1] + 10 [2]	1,65	1,65	1,65	1,85	6,80 (1,90-8,70)	1690 (340-2460)	4,02 **A**	845	7,6	1,1 + 1,1 + 1,1 + 1,2	2,09	2,09	2,09	2,33	8,60 (3,10-10,60)	1870 (580-2620)	4,60 **A**	**935**	8,6
9 [1] + 9 [1] + 9 [1] + 12	1,59	1,59	1,59	2,03	6,80 (1,90-8,80)	1650 (340-2470)	4,12 **A**	825	7,4	1,0 + 1,0 + 1,0 + 1,3	2,01	2,01	2,01	2,57	8,60 (3,00-10,60)	1850 (580-2600)	4,65 **A**	**925**	8,6
9 [1] + 9 [1] + 10 [2] + 10 [2]	1,60	1,60	1,80	1,80	6,80 (1,90-8,70)	1690 (340-2460)	4,02 **A**	845	7,6	1,0 + 1,0 + 1,2 + 1,2	2,03	2,03	2,27	2,27	8,60 (3,10-10,60)	1870 (580-2620)	4,60 **A**	**935**	8,6
9 [1] + 9 [1] + 10 [2] + 12	1,55	1,55	1,72	1,98	6,80 (1,90-8,80)	1680 (340-2470)	4,05 **A**	840	7,5	1,0 + 1,0 + 1,1 + 1,3	1,95	1,95	2,19	2,51	8,60 (3,00-10,60)	1850 (580-2600)	4,65 **A**	**925**	8,6
9 [1] + 10 [2] + 10 [2] + 10 [2]	1,55	1,75	1,75	1,75	6,80 (1,90-8,70)	1690 (340-2160)	4,02 **A**	845	7,6	1,0 + 1,1 + 1,1 + 1,1	1,97	2,21	2,21	2,21	8,60 (3,10-10,60)	1870 (580-2620	4,60 **A**	**935**	8,6

1) For wall type, hyde away, 60x60 cassette.
2) For one way cassette, floor/ceiling, floor console.

Connectivity restriction : CS-E/XE_MKE units are only compatible with CU-2E15LBE, CU-2E18LBE, CU-3E18LBE, CU-4E23LBE and CU-4E27CBPG outdoor units. No other outdoor unit can be connected.

FREE MULTI 4X1 // OUTDOOR UNIT CU-4E27CBPG

Indoor unit	Cooling Capacity (kW)					Input Power (W)	EER	A.C.E.	Current	Moisture Removal	Heating Capacity (kW)					Input Power (W)	COP	A.C.E.	Current
capacity	Room A	Room B	Room C	Room D	Total (Min.-Max.)	Rating	W/W	kWh	230 V (A)	Volume (l/h)	Room A	Room B	Room C	Room D	Total (Min.-Max.)	Rating	W/W	kWh	230 V (A)
1 Room																			
7	2,00				2,00 (1,90-2,70)	440 (380-620)	4,52 A	220	2,10	1,3	3,20				3,20 (1,70-4,70)	840 (370-1830)	3,81 A	420	3,85
9 [1]	2,50				2,50 (2,00-3,40)	550 (380-900)	4,52 A	275	2,60	1,5	3,60				3,60 (1,70-4,80)	1090 (370-1900)	3,31 C	545	4,85
10 [2]	2,80				2,80 (2,00-3,40)	620 (380-900)	4,52 A	310	2,95	1,6	4,00				4,00 (1,70-4,80)	1210 (370-1900)	3,31 C	605	5,40
12	3,20				3,20 (2,00-3,90)	720 (380-1090)	4,44 A	360	3,40	1,8	4,50				4,50 (1,70-5,80)	1310 (370-2290)	3,44 B	655	5,85
15	4,00				4,00 (2,00-4,40)	1030 (380-1390)	3,88 A	515	4,60	2,3	5,60				5,60 (1,80-7,20)	1900 (370-3560)	2,95 D	950	8,35
18	5,00				5,00 (2,10-5,20)	1610 (400-1800)	3,11 B	805	7,15	2,7	7,10				7,10 (2,10-7,30)	2840 (430-3560)	2,50 F	1420	12,40
2 Room																			
7 + 7	2,00	2,00			4,00 (2,10-5,00)	890 (400-1260)	4,49 A	445	3,95	1,3 + 1,3	3,20	3,20			6,40 (1,80-9,40)	1480 (400-3550)	4,32 A	740	6,50
7 + 9 [1]	2,00	2,50			4,50 (2,10-6,10)	1110 (400-1880)	4,07 A	555	4,90	1,3 + 1,5	3,15	3,95			7,10 (2,10-9,40)	1700 (420-3510)	4,18 A	850	7,55
7 + 10 [2]	2,00	2,80			4,80 (2,10-6,10)	1180 (400-1880)	4,07 A	590	5,20	1,3 + 1,6	2,95	4,15			7,10 (2,10-9,40)	1700 (420-3510)	4,18 A	850	7,55
7 + 12	2,00	3,20			5,20 (2,20-7,00)	1320 (400-2790)	3,94 A	660	5,80	1,3 + 1,8	2,90	4,60			7,50 (2,20-9,80)	1740 (420-3490)	4,31 A	870	7,65
7 + 15	2,00	4,00			6,00 (2,20-7,10)	1760 (400-2790)	3,41 A	880	7,75	1,3 + 2,3	2,75	5,55			8,30 (2,40-9,80)	2060 (440-3440)	4,03 A	1030	9,05
7 + 18	2,00	5,00			7,00 (2,50-7,20)	2500 (460-2800)	2,80 D	1250	11,00	1,3 + 2,7	2,50	6,30			8,80 (3,20-9,90)	2260 (530-3400)	3,89 A	1130	9,90
9 [1] + 9 [1]	2,50	2,50			5,00 (2,20-6,90)	1380 (400-2780)	3,61 A	690	6,10	1,5 + 1,5	3,55	3,55			7,10 (2,30-9,40)	1860 (440-3480)	3,81 A	930	8,15
9 [1] + 10 [2]	2,50	2,80			5,30 (2,20-6,90)	1470 (400-2780)	3,61 A	735	6,50	1,5 + 1,6	3,55	3,95			7,50 (2,30-9,40)	1970 (440-3480)	3,81 A	985	8,65
9 [1] + 12	2,50	3,20			5,70 (2,20-7,00)	1620 (400-2790)	3,53 A	810	7,15	1,5 + 1,8	3,55	4,55			8,10 (2,40-9,80)	1980 (440-3460)	4,09 A	990	8,70
9 [1] + 15	2,50	4,00			6,50 (2,20-7,10)	2180 (400-2790)	2,98 C	1090	9,60	1,5 + 2,3	3,30	5,30			8,60 (2,10-9,80)	2175 (530-3390)	3,95 A	1088	9,65
9 [1] + 18	2,35	4,75			7,10 (2,50-7,20)	2610 (460-2800)	2,72 D	1305	11,50	1,5 + 2,6	3,00	6,00			9,00 (3,20-9,90)	2390 (530-3370)	3,77 A	1195	10,50
10 [2] + 10 [2]	2,80	2,80			5,60 (2,20-6,90)	1550 (400-2780)	3,61 A	775	6,85	1,6 + 1,6	3,85	3,85			7,70 (2,30-9,40)	2020 (440-3480)	3,81 A	1010	8,85
10 [2] + 12	2,80	3,20			6,00 (2,20-7,00)	1700 (400-2790)	3,53 A	850	7,55	1,6 + 1,8	3,80	4,30			8,10 (2,40-9,80)	1980 (440-3460)	4,09 A	990	8,70
10 [2] + 15	2,80	4,00			6,80 (2,20-7,10)	2280 (400-2790)	2,98 C	1140	10,00	1,6 + 2,3	3,55	5,05			8,60 (2,10-9,80)	2175 (530-3390)	3,95 A	1088	9,65
10 [2] + 18	2,55	4,55			7,10 (2,50-7,20)	2610 (460-2800)	2,72 D	1305	11,50	1,6 + 2,5	3,25	5,75			9,00 (3,20-9,90)	2390 (530-3370)	3,77 A	1195	10,50
12 + 12	3,20	3,20			6,40 (2,20-7,30)	1860 (400-2810)	3,44 A	930	8,15	1,8 + 1,8	4,25	4,25			8,50 (2,50-10,10)	2110 (470-3390)	4,03 A	1055	9,30
12 + 15	3,10	3,90			7,00 (2,50-7,30)	2410 (460-2810)	2,90 C	1205	10,60	1,7 + 2,3	3,90	4,90			8,80 (3,20-10,10)	2230 (530-3340)	3,95 A	1115	9,85
12 + 18	2,90	4,50			7,40 (2,60-7,40)	2820 (460-2880)	2,62 D	1410	12,30	1,7 + 2,5	3,60	5,60			9,20 (3,20-10,10)	2390 (530-3300)	3,85 A	1195	10,50
15 + 15	3,60	3,60			7,20 (2,50-7,30)	2620 (460-2810)	2,75 D	1310	11,50	2,1 + 2,1	4,55	4,55			9,10 (3,20-10,10)	2360 (530-3320)	3,86 A	1180	10,30
15 + 18	3,25	4,05			7,30 (2,70-7,40)	2670 (480-2820)	2,73 D	1335	11,70	1,8 + 2,3	4,20	5,20			9,40 (3,20-10,20)	2480 (530-3300)	3,79 A	1240	10,90
18 + 18	3,75	3,75			7,50 (2,80-7,60)	2860 (480-2870)	2,62 D	1430	12,50	2,2 + 2,2	4,70	4,70			9,40 (3,50-10,20)	2470 (590-3290)	3,81 A	1235	10,90
3 Room																			
7 + 7 + 7	2,00	2,00	2,00		6,00 (2,20-7,80)	1510 (410-2490)	3,98 A	755	6,65	1,3 + 1,3 + 1,3	2,87	2,87	2,87		8,61 (3,10-10,40)	1990 (500-3250)	4,33 A	995	8,80
7 + 7 + 9 [1]	2,00	2,00	2,50		6,50 (2,50-8,10)	1760 (460-2850)	3,70 A	880	7,75	1,3 + 1,3 + 1,5	2,70	2,70	3,40		8,80 (3,20-10,40)	2010 (510-3220)	4,38 A	1005	8,85
7 + 7 + 10 [2]	2,00	2,00	2,80		6,80 (2,50-8,10)	1840 (460-2850)	3,70 A	920	8,10	1,3 + 1,3 + 1,6	2,60	2,60	3,60		8,80 (3,20-10,40)	2010 (510-3220)	4,38 A	1005	8,85
7 + 7 + 12	2,05	2,05	3,20		7,30 (2,50-8,20)	1980 (460-2790)	3,69 A	990	8,70	1,3 + 1,3 + 1,8	2,45	2,45	4,00		8,90 (3,20-10,40)	2030 (510-3220)	4,38 A	1015	8,95
7 + 7 + 15	1,95	1,95	3,90		7,80 (2,60-8,20)	2330 (460-2830)	3,35 A	1165	10,30	1,3 + 1,3 + 2,3	2,30	2,30	4,60		9,20 (3,20-10,40)	2150 (510-3180)	4,28 A	1075	9,50
7 + 7 + 18	1,80	1,80	4,40		8,00 (2,80-8,30)	2460 (490-2820)	3,25 A	1230	10,80	1,2 + 1,2 + 2,4	2,10	2,10	5,20		9,40 (3,20-10,40)	2120 (510-3180)	4,43 A	1060	9,30
7 + 9 [1] + 9 [1]	2,10	2,65	2,65		7,40 (2,50-8,10)	2140 (460-2790)	3,46 A	1070	9,40	1,4 + 1,6 + 1,6	2,60	3,20	3,20		9,00 (3,20-10,40)	2090 (510-3190)	4,31 A	1045	9,20
7 + 9 [1] + 10 [2]	2,00	2,55	2,85		7,40 (2,50-8,10)	2140 (460-2790)	3,46 A	1070	9,40	1,3 + 1,6 + 1,7	2,45	3,10	3,45		9,00 (3,20-10,40)	2090 (510-3190)	4,31 A	1045	9,20
7 + 9 [1] + 12	1,95	2,45	3,20		7,60 (2,60-8,20)	2240 (460-2840)	3,39 A	1120	9,85	1,3 + 1,5 + 1,8	2,40	3,00	3,80		9,20 (3,20-10,40)	2110 (510-3180)	4,36 A	1055	9,30
7 + 9 [1] + 15	1,90	2,35	3,75		8,00 (2,70-8,20)	2510 (490-2800)	3,19 B	1255	11,00	1,2 + 1,5 + 2,2	2,20	2,75	4,45		9,40 (3,20-10,40)	2160 (510-3140)	4,35 A	1080	9,50
7 + 9 [1] + 18	1,70	2,10	4,20		8,00 (2,80-8,30)	2460 (490-2800)	3,25 A	1230	10,80	1,1 + 1,4 + 2,4	2,00	2,45	4,95		9,40 (3,50-10,40)	2080 (560-3150)	4,52 A	1040	9,15
7 + 10 [2] + 10 [2]	1,90	2,75	2,75		7,40 (2,50-8,10)	2140 (460-2790)	3,46 A	1070	9,40	1,2 + 1,6 + 1,6	2,40	3,30	3,30		9,00 (3,20-10,40)	2090 (510-3190)	4,31 A	1045	9,20
7 + 10 [2] + 12	1,90	2,65	3,05		7,60 (2,60-8,20)	2240 (460-2840)	3,39 A	1120	9,85	1,2 + 1,6 + 1,7	2,30	3,20	3,70		9,20 (3,20-10,40)	2110 (510-3180)	4,36 A	1055	9,30
7 + 10 [2] + 15	1,80	2,55	3,65		8,00 (2,70-8,20)	2510 (490-2800)	3,19 B	1255	11,00	1,2 + 1,6 + 2,1	2,15	3,00	4,25		9,40 (3,20-10,40)	2160 (510-3140)	4,35 A	1080	9,50
7 + 10 [2] + 18	1,60	2,30	4,10		8,00 (2,80-8,30)	2460 (490-2800)	3,25 A	1230	10,80	1,0 + 1,5 + 2,3	1,90	2,70	4,80		9,40 (3,50-10,40)	2080 (560-3150)	4,52 A	1040	9,15
7 + 12 + 12	1,90	3,00	3,00		7,90 (2,70-8,30)	2290 (460-2810)	3,45 A	1145	10,10	1,2 + 1,7 + 1,7	2,20	3,55	3,55		9,30 (3,20-10,50)	2130 (500-3180)	4,37 A	1065	9,40
7 + 12 + 15	1,70	2,80	3,50		8,00 (2,80-8,40)	2380 (490-2840)	3,36 A	1190	10,40	1,1 + 1,6 + 2,0	2,05	3,25	4,10		9,40 (3,20-10,50)	2150 (500-3140)	4,37 A	1075	9,50
7 + 12 + 18	1,55	2,50	3,95		8,00 (2,80-8,30)	2470 (490-2840)	3,24 A	1235	10,90	1,0 + 1,5 + 2,3	1,85	2,95	4,60		9,40 (3,70-10,50)	2170 (620-3140)	4,33 A	1085	9,55
7 + 15 + 15	1,60	3,20	3,20		8,00 (2,80-8,40)	2380 (490-2810)	3,36 A	1190	10,40	1,0 + 1,8 + 1,8	1,90	3,75	3,75		9,40 (3,60-10,50)	2110 (620-3110)	4,45 A	1055	9,30
7 + 15 + 18	1,45	2,90	3,65		8,00 (2,80-8,30)	2470 (490-2810)	3,24 A	1235	10,90	0,9 + 1,7 + 2,1	1,70	3,40	4,30		9,40 (3,90-10,50)	2120 (660-3110)	4,43 A	1060	9,30
7 + 18 + 18	1,30	3,35	3,35		8,00 (2,90-8,40)	2430 (490-2830)	3,29 A	1215	10,70	0,8 + 1,9 + 1,9	1,60	3,90	3,90		9,40 (4,10-10,50)	2170 (700-3120)	4,33 A	1085	9,55
9 [1] + 9 [1] + 9 [1]	2,60	2,60	2,60		7,80 (2,60-8,10)	2450 (460-2820)	3,18 B	1225	10,80	1,6 + 1,6 + 1,6	3,08	3,08	3,08		9,24 (3,20-10,40)	2170 (510-3160)	4,26 A	1085	9,55
9 [1] + 9 [1] + 10 [2]	2,50	2,50	2,80		7,80 (2,60-8,10)	2450 (460-2820)	3,18 B	1225	10,80	1,5 + 1,5 + 1,6	2,96	2,96	3,32		9,24 (3,20-10,40)	2170 (510-3160)	4,26 A	1085	9,55
9 [1] + 9 [1] + 12	2,45	2,45	3,10		8,00 (2,70-8,20)	2510 (490-2810)	3,19 B	1255	11,00	1,5 + 1,5 + 1,7	2,85	2,85	3,70		9,40 (3,20-10,40)	2190 (510-3150)	4,29 A	1095	9,65
9 [1] + 9 [1] + 15	2,20	2,20	3,60		8,00 (2,80-8,20)	2510 (490-2790)	3,19 B	1255	11,00	1,4 + 1,4 + 2,1	2,60	2,60	4,20		9,40 (3,30-10,40)	2140 (530-3130)	4,39 A	1070	9,40
9 [1] + 9 [1] + 18	2,00	2,00	4,00		8,00 (2,80-8,30)	2460 (490-2790)	3,25 A	1230	10,80	1,3 + 1,3 + 2,3	2,35	2,35	4,70		9,40 (3,80-10,40)	2100 (640-3120)	4,48 A	1050	9,20
9 [1] + 10 [2] + 10 [2]	2,40	2,70	2,70		7,80 (2,60-8,10)	2450 (460-2820)	3,18 B	1225	10,80	1,5 + 1,6 + 1,6	2,84	3,20	3,20		9,24 (3,20-10,40)	2170 (510-3160)	4,26 A	1085	9,55
9 [1] + 10 [2] + 12	2,35	2,65	3,00		8,00 (2,70-8,20)	2510 (490-2810)	3,19 B	1255	11,00	1,5 + 1,6 + 1,7	2,75	3,10	3,55		9,40 (3,20-10,40)	2190 (510-3150)	4,29 A	1095	9,65
9 [1] + 10 [2] + 15	2,15	2,40	3,45		8,00 (2,80-8,20)	2510 (490-2790)	3,19 B	1255	11,00	1,4 + 1,5 + 2,0	2,50	2,85	4,05		9,40 (3,30-10,40)	2140 (530-3130)	4,39 A	1070	9,40
9 [1] + 10 [2] + 18	1,95	2,15	3,90		8,00 (2,80-8,30)	2460 (490-2790)	3,25 A	1230	10,80	1,3 + 1,4 + 2,3	2,30	2,55	4,55		9,40 (3,80-10,40)	2100 (640-3120)	4,48 A	1050	9,20
9 [1] + 12 + 12	2,20	2,90	2,90		8,00 (2,70-8,40)	2380 (490-2850)	3,36 A	1190	10,40	1,4 + 1,7 + 1,7	2,60	3,40	3,40		9,40 (3,20-10,50)	2170 (500-3150)	4,33 A	1085	9,55
9 [1] + 12 + 15	2,05	2,65	3,30		8,00 (2,80-8,40)	2380 (490-2820)	3,36 A	1190	10,40	1,3 + 1,6 + 1,9	2,40	3,10	3,90		9,40 (3,50-10,50)	2130 (560-3120)	4,41 A	1065	9,40
9 [1] + 12 + 18	1,85	2,40	3,75		8,00 (2,80-8,40)	2340 (490-2830)	3,42 A	1170	10,30	1,2 + 1,5 + 2,2	2,20	2,80	4,40		9,40 (3,90-10,50)	2150 (660-3120)	4,37 A	1075	9,50
9 [1] + 15 + 15	1,90	3,05	3,05		8,00 (2,80-8,40)	2380 (490-2800)	3,36 A	1190	10,40	1,2 + 1,7 + 1,7	2,20	3,60	3,60		9,40 (3,80-10,50)	2060 (640-3080)	4,56 A	1030	9,05
9 [1] + 15 + 18	1,70	2,80	3,50		8,00 (2,80-8,40)	2340 (490-2800)	3,42 A	1170	10,30	1,1 + 1,6 + 2,0	2,05	3,25	4,10		9,40 (4,00-10,50)	2100 (680-3080)	4,48 A	1050	9,20
9 [1] + 18 + 18	1,60	3,20	3,20		8,00 (2,90-8,50)	2340 (520-2800)	3,42 A	1170	10,30	1,0 + 1,8 + 1,8	1,90	3,75	3,75		9,40 (4,20-10,50)	2140 (700-3080)	4,39 A	1070	9,40
10 [2] + 10 [2] + 10 [2]	2,60	2,60	2,60		7,80 (2,60-8,10)	2450 (460-2820)	3,18 B	1225	10,80	1,6 + 1,6 + 1,6	3,08	3,08	3,08		9,24 (3,20-10,40)	2170 (510-3160)	4,26 A	1085	9,55
10 [2] + 10 [2] + 12	2,55	2,55	2,90		8,00 (2,70-8,20)	2510 (490-2810)	3,19 B	1255	11,00	1,6 + 1,6 + 1,7	3,00	3,00	3,40		9,40 (3,20-10,40)	2190 (510-3150)	4,29 A	1095	9,65
10 [2] + 10 [2] + 15	2,35	2,35	3,30		8,00 (2,80-8,20)	2510 (490-2790)	3,19 B	1255	11,00	1,5 + 1,5 + 1,9	2,75	2,75	3,90		9,40 (3,30-10,40)	2140 (530-3130)	4,39 A	1070	9,40
10 [2] + 10 [2] + 18	2,10	2,10	3,80		8,00 (2,80-8,30)	2460 (490-2790)	3,25 A	1230	10,80	1,4 + 1,4 + 2,2	2,50	2,50	4,40		9,40 (3,80-10,40)	2100 (640-3120)	4,48 A	1050	9,20
10 [2] + 12 + 12	2,40	2,80	2,80		8,00 (2,70-8,40)	2380 (490-2850)	3,36 A	1190	10,40	1,5 + 1,6 + 1,6	2,90	3,25	3,25		9,40 (3,20-10,50)	2170 (500-3150)	4,33 A	1085	9,55
10 [2] + 12 + 15	2,25	2,55	3,20		8,00 (2,80-8,40)	2380 (490-2820)	3,36 A	1190	10,40	1,5 + 1,6 + 1,8	2,65	3,00	3,75		9,40 (3,50-10,50)	2130 (560-3120)	4,41 A	1065	9,40
10 [2] + 12 + 18	2,00	2,35	3,65		8,00 (2,80-8,40)	2340 (490-2830)	3,42 A	1170	10,30	1,3 + 1,5 + 2,1	2,40	2,75	4,25		9,40 (3,90-10,50)	2150 (660-3120)	4,37 A	1075	9,50
10 [2] + 15 + 15	2,10	2,95	2,95		8,00 (2,80-8,40)	2380 (490-2800)	3,36 A	1190	10,40	1,4 + 1,7 + 1,7	2,40	3,50	3,50		9,40 (3,80-10,50)	2060 (640-3080)	4,56 A	1030	9,05
10 [2] + 15 + 18	1,90	2,70	3,40		8,00 (2,80-8,40)	2340 (490-2800)	3,42 A	1170	10,30	1,2 + 1,6 + 1,9	2,20	3,20	4,00		9,40 (4,00-10,50)	2100 (680-3080)	4,48 A	1050	9,20
10 [2] + 18 + 18	1,70	3,15	3,15		8,00 (2,90-8,50)	2340 (520-2800)	3,42 A	1170	10,30	1,1 + 1,8 + 1,8	2,10	3,65	3,65		9,40 (4,20-10,50)	2140 (700-3080)	4,39 A	1070	9,40
12 + 12 + 12	2,66	2,66	2,66		7,98 (2,80-8,50)	2300 (490-2830)	3,47 A	1150	10,10	1,6 + 1,6 + 1,6	3,13	3,13	3,13		9,39 (3,30-10,50)	2160 (520-3180)	4,35 A	1080	9,50
12 + 12 + 15	2,45	2,45	3,10		8,00 (2,80-8,40)	2390 (490-2800)	3,35 A	1195	10,50	1,5 + 1,5 + 1,7	2,90	2,90	3,60		9,40 (3,70-10,50)	2140 (620-3150)	4,39 A	1070	9,40
12 + 12 + 18	2,25	2,25	3,50		8,00 (2,80-8,40)	2390 (490-2830)	3,35 A	1195	10,50	1,5 + 1,5 + 2,0	2,65	2,65	4,10		9,40 (4,00-10,50)	2130 (680-3120)	4,41 A	1065	9,40
12 + 15 + 15	2,30	2,85	2,85		8,00 (2,80-8,40)	2390 (490-2820)	3,35 A	1195	10,50	1,5 + 1,7 + 1,7	2,70	3,35	3,35		9,40 (3,90-10,50)	2120 (660-3120)	4,43 A	1060	9,30
12 + 15 + 18	2,10	2,60	3,30		8,00 (2,90-8,40)	2350 (490-2820)	3,40 A	1175	10,30	1,4 + 1,6 + 1,9	2,45	3,10	3,85		9,40 (4,10-10,50)	2100 (700-3100)	4,48 A	1050	9,20
12 + 18 + 18	1,90	3,05	3,05		8,00 (2,90-8,50)	2350 (520-2810)	3,40 A	1175	10,30	1,2 + 1,7 + 1,7	2,30	3,55	3,55		9,40 (4,20-10,50)	2060 (700-3080)	4,56 A	1030	9,05
15 + 15 + 15	2,66	2,66	2,66		7,98 (2,90-8,40)	2390 (490-2840)	3,34 A	1195	10,50	1,6 + 1,6 + 1,6	3,13	3,13	3,13		9,39 (4,00-10,50)	2100 (680-3080)	4,47 A	1050	9,20
15 + 15 + 18	2,45	2,45	3,10		8,00 (2,90-8,40)	2390 (520-2810)	3,35 A	1195	10,50	1,5 + 1,5 + 1,7	2,90	2,90	3,60		9,40 (4,20-10,50)	2080 (700-3080)	4,52 A	1040	9,15

FREE MULTI 4X1 // OUTDOOR UNIT CU-4E27CBPG (CONT.)

Indoor unit	Cooling Capacity (kW)					Input Power (W)	EER	A.C.E.	Current	Moisture Removal	Heating Capacity (kW)					Input Power (W)	COP	A.C.E.	Current
capacity	Room A	Room B	Room C	Room D	Total (Min.-Max.)	Rating	W/W	kWh	230 V (A)	Volume (l/h)	Room A	Room B	Room C	Room D	Total (Min.-Max.)	Rating	W/W	kWh	230 V (A)
4 Room																			
7 + 7 + 7 + 7	2,00	2,00	2,00	2,00	8,00 (2,70-8,80)	2150 (490-2840)	3,72 A	1075	9,50	1,3 + 1,3 + 1,3 + 1,3	2,35	2,35	2,35	2,35	9,40 (3,20-10,50)	2080 (550-3140)	4,52 A	1040	9,15
7 + 7 + 7 + 9 [1]	1,90	1,90	1,90	2,30	8,00 (2,80-8,80)	2140 (490-2880)	3,74 A	1070	9,40	1,2 + 1,2 + 1,2 + 1,5	2,20	2,20	2,20	2,80	9,40 (3,20-10,50)	2060 (550-3120)	4,56 A	1030	9,05
7 + 7 + 7 + 10 [2]	1,80	1,80	1,80	2,60	8,00 (2,80-8,80)	2140 (490-2880)	3,74 A	1070	9,40	1,2 + 1,2 + 1,2 + 1,6	2,15	2,15	2,15	2,95	9,40 (3,20-10,50)	2060 (550-3120)	4,56 A	1030	9,05
7 + 7 + 7 + 12	1,75	1,75	1,75	2,75	8,00 (2,80-8,90)	2130 (490-2880)	3,76 A	1065	9,40	1,1 + 1,1 + 1,1 + 1,6	2,05	2,05	2,05	3,25	9,40 (3,40-10,50)	2120 (590-3180)	4,43 A	1060	9,30
7 + 7 + 7 + 15	1,60	1,60	1,60	3,20	8,00 (2,80-8,90)	2110 (490-2870)	3,79 A	1055	9,30	1,0 + 1,0 + 1,0 + 1,8	1,90	1,90	1,90	3,70	9,40 (3,80-10,50)	2090 (640-3140)	4,50 A	1045	9,20
7 + 7 + 7 + 18	1,45	1,45	1,45	3,65	8,00 (2,80-8,90)	2110 (490-2840)	3,79 A	1055	9,30	0,9 + 0,9 + 0,9 + 2,1	1,70	1,70	1,70	4,30	9,40 (4,00-10,50)	2120 (680-3110)	4,43 A	1060	9,30
7 + 7 + 9 [1] + 9 [1]	1,80	1,80	2,20	2,20	8,00 (2,80-8,80)	2130 (490-2870)	3,76 A	1065	9,40	1,2 + 1,2 + 1,4 + 1,4	2,10	2,10	2,60	2,60	9,40 (3,50-10,50)	2050 (610-3110)	4,59 A	1025	9,05
7 + 7 + 9 [1] + 10 [2]	1,70	1,70	2,15	2,45	8,00 (2,80-8,80)	2130 (490-2870)	3,76 A	1065	9,40	1,1 + 1,1 + 1,4 + 1,5	2,00	2,00	2,55	2,85	9,40 (3,50-10,50)	2050 (610-3110)	4,59 A	1025	9,05
7 + 7 + 9 [1] + 12	1,65	1,65	2,05	2,65	8,00 (2,80-8,90)	2120 (490-2870)	3,77 A	1060	9,30	1,1 + 1,1 + 1,3 + 1,6	1,95	1,95	2,40	3,10	9,40 (3,70-10,50)	2100 (620-3160)	4,48 A	1050	9,20
7 + 7 + 9 [1] + 15	1,50	1,50	1,90	3,10	8,00 (2,80-8,90)	2090 (490-2840)	3,83 A	1045	9,20	1,0 + 1,0 + 1,2 + 1,7	1,80	1,80	2,20	3,60	9,40 (3,90-10,50)	2070 (660-3110)	4,54 A	1035	9,10
7 + 7 + 9 [1] + 18	1,40	1,40	1,70	3,50	8,00 (2,90-8,90)	2110 (520-2880)	3,79 A	1055	9,30	0,9 + 0,9 + 1,1 + 2,0	1,65	1,65	2,00	4,10	9,40 (4,10-10,50)	2090 (700-3100)	4,50 A	1045	9,20
7 + 7 + 10 [2] + 10 [2]	1,65	1,65	2,35	2,35	8,00 (2,80-8,80)	2130 (490-2870)	3,76 A	1065	9,40	1,1 + 1,1 + 1,5 + 1,5	1,95	1,95	2,75	2,75	9,40 (3,50-10,50)	2050 (610-3110)	4,59 A	1025	9,05
7 + 7 + 10 [2] + 12	1,60	1,60	2,25	2,55	8,00 (2,80-8,90)	2120 (490-2870)	3,77 A	1060	9,30	1,0 + 1,0 + 1,5 + 1,6	1,90	1,90	2,60	3,00	9,40 (3,70-10,50)	2100 (620-3160)	4,48 A	1050	9,20
7 + 7 + 10 [2] + 15	1,50	1,50	2,05	2,95	8,00 (2,80-8,90)	2090 (490-2840)	3,83 A	1045	9,20	1,0 + 1,0 + 1,3 + 1,7	1,75	1,75	2,40	3,50	9,40 (3,90-10,50)	2070 (660-3110)	4,54 A	1035	9,10
7 + 7 + 10 [2] + 18	1,35	1,35	1,90	3,40	8,00 (2,90-8,90)	2110 (520-2880)	3,79 A	1055	9,30	0,9 + 0,9 + 1,2 + 1,9	1,60	1,60	2,20	4,00	9,40 (4,10-10,50)	2090 (700-3100)	4,50 A	1045	9,20
7 + 7 + 12 + 12	1,55	1,55	2,45	2,45	8,00 (2,80-8,90)	2090 (500-2870)	3,83 A	1045	9,20	1,0 + 1,0 + 1,5 + 1,5	1,80	1,80	2,90	2,90	9,40 (3,80-10,50)	2110 (640-3190)	4,45 A	1055	9,30
7 + 7 + 12 + 15	1,45	1,45	2,25	2,85	8,00 (2,80-8,90)	2080 (500-2840)	3,85 A	1040	9,15	0,9 + 0,9 + 1,5 + 1,7	1,70	1,70	2,65	3,35	9,40 (4,00-10,50)	2080 (680-3150)	4,52 A	1040	9,15
7 + 7 + 12 + 18	1,30	1,30	2,10	3,30	8,00 (2,90-9,00)	2040 (520-2860)	3,92 A	1020	8,95	0,8 + 0,8 + 1,4 + 1,9	1,55	1,55	2,45	3,85	9,40 (4,10-10,50)	2110 (700-3080)	4,45 A	1055	9,30
7 + 7 + 15 + 15	1,35	1,35	2,65	2,65	8,00 (2,90-9,00)	2060 (520-2850)	3,88 A	1030	9,05	0,9 + 0,9 + 1,6 + 1,6	1,55	1,55	3,15	3,15	9,40 (4,10-10,50)	2050 (700-3110)	4,59 A	1025	9,05
7 + 7 + 15 + 18	1,25	1,25	2,40	3,10	8,00 (2,90-9,00)	2020 (520-2880)	3,96 A	1010	8,85	0,8 + 0,8 + 1,5 + 1,7	1,45	1,45	2,90	3,60	9,40 (4,20-10,50)	2080 (700-3060)	4,52 A	1040	9,15
7 + 9 [1] + 9 [1] + 9 [1]	1,70	2,10	2,10	2,10	8,00 (2,80-8,80)	2120 (490-2850)	3,77 A	1060	9,30	1,1 + 1,4 + 1,4 + 1,4	2,05	2,45	2,45	2,45	9,40 (3,80-10,50)	2040 (640-3080)	4,61 A	1020	8,95
7 + 9 [1] + 9 [1] + 10 [2]	1,60	2,05	2,05	2,30	8,00 (2,80-8,80)	2120 (490-2850)	3,77 A	1060	9,30	1,0 + 1,3 + 1,3 + 1,5	1,90	2,40	2,40	2,70	9,40 (3,80-10,50)	2040 (640-3080)	4,61 A	1020	8,95
7 + 9 [1] + 9 [1] + 12	1,55	1,95	1,95	2,55	8,00 (2,80-8,90)	2100 (490-2850)	3,81 A	1050	9,20	1,0 + 1,3 + 1,3 + 1,6	1,85	2,30	2,30	2,95	9,40 (3,90-10,50)	2080 (660-3130)	4,52 A	1040	9,15
7 + 9 [1] + 9 [1] + 15	1,45	1,80	1,80	2,95	8,00 (2,80-8,90)	2130 (490-2860)	3,76 A	1065	9,40	0,9 + 1,2 + 1,2 + 1,7	1,70	2,15	2,15	3,40	9,40 (4,00-10,50)	2050 (680-3080)	4,59 A	1025	9,05
7 + 9 [1] + 9 [1] + 18	1,35	1,65	1,65	3,35	8,00 (2,90-8,90)	2110 (520-2860)	3,79 A	1055	9,30	0,9 + 1,1 + 1,1 + 1,9	1,55	1,95	1,95	3,95	9,40 (4,20-10,50)	2080 (700-3080)	4,52 A	1040	9,15
7 + 9 [1] + 10 [2] + 10 [2]	1,60	2,00	2,20	2,20	8,00 (2,80-8,80)	2120 (490-2850)	3,77 A	1060	9,30	1,0 + 1,3 + 1,4 + 1,4	1,85	2,35	2,60	2,60	9,40 (3,80-10,50)	2040 (640-3080)	4,61 A	1020	8,95
7 + 9 [1] + 10 [2] + 12	1,50	1,90	2,15	2,45	8,00 (2,80-8,90)	2100 (490-2850)	3,81 A	1050	9,20	1,0 + 1,2 + 1,4 + 1,5	1,80	2,25	2,50	2,85	9,40 (3,90-10,50)	2080 (660-3130)	4,52 A	1040	9,15
7 + 9 [1] + 10 [2] + 15	1,40	1,75	2,00	2,85	8,00 (2,80-8,90)	2130 (490-2860)	3,76 A	1065	9,40	0,9 + 1,1 + 1,3 + 1,7	1,60	2,10	2,35	3,35	9,40 (4,00-10,50)	2050 (680-3080)	4,59 A	1025	9,05
7 + 9 [1] + 10 [2] + 18	1,30	1,65	1,80	3,25	8,00 (2,90-8,90)	2110 (520-2860)	3,79 A	1055	9,30	0,8 + 1,1 + 1,2 + 1,8	1,55	1,90	2,15	3,80	9,40 (4,20-10,50)	2080 (700-3080)	4,52 A	1040	9,15
7 + 9 [1] + 12 + 12	1,45	1,85	2,35	2,35	8,00 (2,80-8,90)	2130 (500-2850)	3,76 A	1065	9,40	0,9 + 1,2 + 1,5 + 1,5	1,70	2,20	2,75	2,75	9,40 (4,00-10,50)	2090 (680-3180)	4,50 A	1045	9,20
7 + 9 [1] + 12 + 15	1,35	1,70	2,20	2,75	8,00 (2,90-9,00)	2070 (520-2860)	3,86 A	1035	9,15	0,9 + 1,1 + 1,4 + 1,6	1,60	2,00	2,55	3,25	9,40 (4,10-10,50)	2060 (700-3120)	4,56 A	1030	9,05
7 + 9 [1] + 12 + 18	1,25	1,55	2,00	3,20	8,00 (2,90-9,00)	2030 (520-2840)	3,94 A	1015	8,95	0,8 + 1,0 + 1,3 + 1,8	1,50	1,85	2,35	3,70	9,40 (4,20-10,50)	2090 (700-3080)	4,50 A	1045	9,20
7 + 9 [1] + 15 + 15	1,30	1,60	2,55	2,55	8,00 (2,90-9,00)	2040 (520-2870)	3,92 A	1020	8,95	0,8 + 1,0 + 1,6 + 1,6	1,50	1,90	3,00	3,00	9,40 (4,20-10,50)	2030 (700-3080)	4,63 A	1015	8,95
7 + 9 [1] + 15 + 18	1,20	1,50	2,35	2,95	8,00 (2,90-9,00)	2020 (520-2880)	3,96 A	1010	8,85	0,7 + 1,0 + 1,5 + 1,7	1,35	1,75	2,80	3,50	9,40 (4,20-10,50)	2080 (700-3060)	4,52 A	1040	9,15
7 + 10 [2] + 10 [2] + 10 [2]	1,55	2,15	2,15	2,15	8,00 (2,80-8,80)	2120 (490-2850)	3,77 A	1060	9,30	1,0 + 1,4 + 1,4 + 1,4	1,75	2,55	2,55	2,55	9,40 (3,80-10,50)	2040 (640-3080)	4,61 A	1020	8,95
7 + 10 [2] + 10 [2] + 12	1,50	2,05	2,05	2,40	8,00 (2,80-8,90)	2100 (490-2850)	3,81 A	1050	9,20	1,0 + 1,3 + 1,3 + 1,5	1,70	2,45	2,45	2,80	9,40 (3,90-10,50)	2080 (660-3130)	4,52 A	1040	9,15
7 + 10 [2] + 10 [2] + 15	1,35	1,95	1,95	2,75	8,00 (2,80-8,90)	2130 (490-2860)	3,76 A	1065	9,40	0,9 + 1,3 + 1,3 + 1,6	1,60	2,25	2,25	3,30	9,40 (4,00-10,50)	2050 (680-3080)	4,59 A	1025	9,05
7 + 10 [2] + 10 [2] + 18	1,25	1,80	1,80	3,15	8,00 (2,90-8,90)	2110 (520-2860)	3,79 A	1055	9,30	0,8 + 1,2 + 1,2 + 1,8	1,45	2,10	2,10	3,75	9,40 (4,20-10,50)	2080 (700-3080)	4,52 A	1040	9,15
7 + 10 [2] + 12 + 12	1,40	2,00	2,30	2,30	8,00 (2,80-8,90)	2130 (500-2850)	3,76 A	1065	9,40	0,9 + 1,3 + 1,5 + 1,5	1,65	2,35	2,70	2,70	9,40 (4,00-10,50)	2090 (680-3180)	4,50 A	1045	9,20
7 + 10 [2] + 12 + 15	1,35	1,85	2,15	2,65	8,00 (2,90-9,00)	2070 (520-2860)	3,86 A	1035	9,15	0,9 + 1,2 + 1,4 + 1,6	1,55	2,20	2,50	3,15	9,40 (4,10-10,50)	2060 (700-3120)	4,56 A	1030	9,05
7 + 10 [2] + 12 + 18	1,25	1,70	1,95	3,10	8,00 (2,90-9,00)	2030 (520-2840)	3,94 A	1015	8,95	0,8 + 1,1 + 1,3 + 1,7	1,45	2,00	2,30	3,65	9,40 (4,20-10,50)	2090 (700-3080)	4,50 A	1045	9,20
7 + 10 [2] + 15 + 15	1,25	1,75	2,50	2,50	8,00 (2,90-9,00)	2040 (520-2870)	3,92 A	1020	8,95	0,8 + 1,1 + 1,5 + 1,5	1,45	2,05	2,95	2,95	9,40 (4,20-10,50)	2030 (700-3080)	4,63 A	1015	8,95
7 + 12 + 12 + 12	1,40	2,20	2,20	2,20	8,00 (2,80-9,10)	2040 (500-2870)	3,92 A	1020	8,95	0,9 + 1,4 + 1,4 + 1,4	1,60	2,60	2,60	2,60	9,40 (4,00-10,60)	2110 (680-3120)	4,45 A	1055	9,30
7 + 12 + 12 + 15	1,30	2,05	2,05	2,60	8,00 (2,90-9,10)	2020 (520-2840)	3,96 A	1010	8,85	0,8 + 1,3 + 1,3 + 1,6	1,45	2,45	2,45	3,05	9,40 (4,10-10,60)	2080 (700-3080)	4,52 A	1040	9,15
7 + 12 + 12 + 18	1,20	1,90	1,90	3,00	8,00 (3,00-9,20)	2000 (530-2870)	4,00 A	1000	8,80	0,7 + 1,2 + 1,2 + 1,7	1,40	2,25	2,25	3,50	9,40 (4,20-10,60)	2110 (700-3060)	4,45 A	1055	9,30
7 + 12 + 15 + 15	1,20	2,00	2,40	2,40	8,00 (2,90-9,10)	2090 (520-2860)	3,83 A	1045	9,20	0,7 + 1,3 + 1,5 + 1,5	1,40	2,30	2,85	2,85	9,40 (4,20-10,60)	2060 (700-3060)	4,56 A	1030	9,05
9 [1] + 9 [1] + 9 [1] + 9 [1]	2,00	2,00	2,00	2,00	8,00 (2,80-8,80)	2110 (490-2840)	3,79 A	1055	9,30	1,3 + 1,3 + 1,3 + 1,3	2,35	2,35	2,35	2,35	9,40 (3,90-10,50)	2030 (660-3080)	4,63 A	1015	8,95
9 [1] + 9 [1] + 9 [1] + 10 [2]	1,95	1,95	1,95	2,15	8,00 (2,80-8,80)	2110 (490-2840)	3,79 A	1055	9,30	1,3 + 1,3 + 1,3 + 1,4	2,30	2,30	2,30	2,50	9,40 (3,90-10,50)	2030 (660-3080)	4,63 A	1015	8,95
9 [1] + 9 [1] + 9 [1] + 12	1,85	1,85	1,85	2,45	8,00 (2,80-8,90)	2090 (490-2870)	3,83 A	1045	9,20	1,2 + 1,2 + 1,2 + 1,5	2,20	2,20	2,20	2,80	9,40 (4,00-10,50)	2060 (680-3100)	4,56 A	1030	9,05
9 [1] + 9 [1] + 9 [1] + 15	1,75	1,75	1,75	2,75	8,00 (2,90-8,90)	2120 (520-2850)	3,77 A	1060	9,30	1,1 + 1,1 + 1,1 + 1,6	2,05	2,05	2,05	3,25	9,40 (4,10-10,50)	2040 (700-3070)	4,61 A	1020	8,95
9 [1] + 9 [1] + 9 [1] + 18	1,60	1,60	1,60	3,20	8,00 (2,90-8,90)	2110 (520-2850)	3,79 A	1055	9,30	1,0 + 1,0 + 1,0 + 1,8	1,90	1,90	1,90	3,70	9,40 (4,20-10,50)	2070 (700-3070)	4,54 A	1035	9,15
9 [1] + 9 [1] + 10 [2] + 10 [2]	1,90	1,90	2,10	2,10	8,00 (2,80-8,80)	2110 (490-2840)	3,79 A	1055	9,30	1,2 + 1,2 + 1,4 + 1,4	2,20	2,20	2,50	2,50	9,40 (3,90-10,50)	2030 (660-3080)	4,63 A	1015	8,95
9 [1] + 9 [1] + 10 [2] + 12	1,80	1,80	2,05	2,35	8,00 (2,80-8,90)	2090 (490-2870)	3,83 A	1045	9,20	1,2 + 1,2 + 1,3 + 1,5	2,15	2,15	2,35	2,75	9,40 (4,00-10,50)	2060 (680-3100)	4,56 A	1030	9,05
9 [1] + 9 [1] + 10 [2] + 15	1,70	1,70	1,90	2,70	8,00 (2,90-8,90)	2120 (520-2850)	3,77 A	1060	9,30	1,1 + 1,1 + 1,2 + 1,6	2,00	2,00	2,20	3,20	9,40 (4,10-10,50)	2040 (700-3070)	4,61 A	1020	8,95
9 [1] + 9 [1] + 10 [2] + 18	1,55	1,55	1,75	3,15	8,00 (2,90-8,90)	2110 (520-2850)	3,79 A	1055	9,30	1,0 + 1,0 + 1,1 + 1,8	1,85	1,85	2,05	3,65	9,40 (4,20-10,50)	2070 (700-3070)	4,54 A	1035	9,15
9 [1] + 9 [1] + 12 + 12	1,75	1,75	2,25	2,25	8,00 (2,90-9,00)	2080 (500-2870)	3,85 A	1040	9,15	1,1 + 1,1 + 1,5 + 1,5	2,05	2,05	2,65	2,65	9,40 (4,00-10,50)	2070 (680-3140)	4,54 A	1035	9,15
9 [1] + 9 [1] + 12 + 15	1,65	1,65	2,10	2,60	8,00 (2,90-9,00)	2050 (520-2880)	3,90 A	1025	9,05	1,1 + 1,1 + 1,4 + 1,6	1,95	1,95	2,40	3,10	9,40 (4,20-10,50)	2040 (700-3080)	4,61 A	1020	8,95
9 [1] + 9 [1] + 12 + 18	1,50	1,50	1,95	3,05	8,00 (2,90-9,00)	2030 (520-2840)	3,94 A	1015	8,95	1,0 + 1,0 + 1,3 + 1,7	1,80	1,80	2,25	3,55	9,40 (4,20-10,50)	2090 (700-3080)	4,50 A	1045	9,20
9 [1] + 9 [1] + 15 + 15	1,55	1,55	2,45	2,45	8,00 (3,00-9,00)	2040 (520-2860)	3,92 A	1020	8,95	1,0 + 1,0 + 1,5 + 1,5	1,80	1,80	2,90	2,90	9,40 (4,20-10,50)	2020 (700-3070)	4,65 A	1010	8,85
9 [1] + 10 [2] + 10 [2] + 10 [2]	1,85	2,05	2,05	2,05	8,00 (2,80-8,80)	2110 (490-2840)	3,79 A	1055	9,30	1,2 + 1,3 + 1,3 + 1,3	2,20	2,40	2,40	2,40	9,40 (3,90-10,50)	2030 (660-3080)	4,63 A	1015	8,95
9 [1] + 10 [2] + 10 [2] + 12	1,75	2,00	2,00	2,25	8,00 (2,80-8,90)	2090 (490-2870)	3,83 A	1045	9,20	1,1 + 1,3 + 1,3 + 1,5	2,05	2,35	2,35	2,65	9,40 (4,00-10,50)	2060 (680-3100)	4,56 A	1030	9,05
9 [1] + 10 [2] + 10 [2] + 15	1,65	1,85	1,85	2,65	8,00 (2,90-8,90)	2120 (520-2850)	3,77 A	1060	9,30	1,1 + 1,2 + 1,2 + 1,6	1,90	2,20	2,20	3,10	9,40 (4,10-10,50)	2040 (700-3070)	4,61 A	1020	8,95
9 [1] + 10 [2] + 10 [2] + 18	1,55	1,70	1,70	3,05	8,00 (2,90-8,90)	2110 (520-2850)	3,79 A	1055	9,30	1,0 + 1,1 + 1,1 + 1,7	1,80	2,00	2,00	3,60	9,40 (4,20-10,50)	2070 (700-3070)	4,54 A	1035	9,15
9 [1] + 10 [2] + 12 + 12	1,70	1,90	2,20	2,20	8,00 (2,80-8,90)	2130 (500-2850)	3,76 A	1065	9,40	1,1 + 1,2 + 1,4 + 1,4	2,00	2,30	2,55	2,55	9,40 (4,00-10,50)	2090 (680-3180)	4,50 A	1045	9,20
9 [1] + 10 [2] + 12 + 15	1,60	1,80	2,05	2,55	8,00 (2,90-9,00)	2070 (520-2860)	3,86 A	1035	9,15	1,0 + 1,2 + 1,3 + 1,6	1,90	2,10	2,40	3,00	9,40 (4,10-10,50)	2060 (700-3120)	4,56 A	1030	9,05
9 [1] + 10 [2] + 12 + 18	1,50	1,65	1,90	2,95	8,00 (2,90-9,00)	2030 (520-2840)	3,94 A	1015	8,95	1,0 + 1,1 + 1,2 + 1,7	1,70	1,95	2,25	3,50	9,40 (4,20-10,50)	2090 (700-3080)	4,50 A	1045	9,20
9 [1] + 10 [2] + 15 + 15	1,50	1,70	2,40	2,40	8,00 (2,90-9,00)	2040 (520-2870)	3,92 A	1020	8,95	1,0 + 1,1 + 1,5 + 1,5	1,70	2,00	2,85	2,85	9,40 (4,20-10,50)	2030 (700-3080)	4,63 A	1015	8,95
9 [1] + 12 + 12 + 12	1,70	2,10	2,10	2,10	8,00 (2,90-9,10)	2030 (520-2860)	3,94 A	1015	8,95	1,1 + 1,4 + 1,4 + 1,4	1,90	2,50	2,50	2,50	9,40 (4,10-10,60)	2090 (700-3100)	4,50 A	1045	9,20
9 [1] + 12 + 12 + 15	1,50	2,00	2,00	2,50	8,00 (2,90-9,10)	2020 (520-2840)	3,96 A	1010	8,85	1,0 + 1,3 + 1,3 + 1,5	1,80	2,35	2,35	2,90	9,40 (4,10-10,60)	2080 (700-3080)	4,52 A	1040	9,15
10 [2] + 10 [2] + 10 [2] + 10 [2]	2,00	2,00	2,00	2,00	8,00 (2,80-8,80)	2110 (490-2840)	3,79 A	1055	9,30	1,3 + 1,3 + 1,3 + 1,3	2,35	2,35	2,35	2,35	9,40 (3,90-10,50)	2030 (660-3080)	4,63 A	1015	8,95
10 [2] + 10 [2] + 10 [2] + 12	1,95	1,95	1,95	2,15	8,00 (2,80-8,90)	2090 (490-2870)	3,83 A	1045	9,20	1,3 + 1,3 + 1,3 + 1,4	2,25	2,25	2,25	2,65	9,40 (4,00-10,50)	2060 (680-3100)	4,56 A	1030	9,05
10 [2] + 10 [2] + 10 [2] + 15	1,80	1,80	1,80	2,60	8,00 (2,90-8,90)	2120 (520-2850)	3,77 A	1060	9,30	1,2 + 1,2 + 1,2 + 1,6	2,10	2,10	2,10	3,10	9,40 (4,10-10,50)	2040 (700-3070)	4,61 A	1020	8,95
10 [2] + 10 [2] + 10 [2] + 18	1,65	1,65	1,65	3,05	8,00 (2,90-8,90)	2110 (520-2850)	3,79 A	1055	9,30	1,1 + 1,1 + 1,1 + 1,7	1,95	1,95	1,95	3,55	9,40 (4,20-10,50)	2070 (700-3070)	4,54 A	1035	9,15
10 [2] + 10 [2] + 12 + 12	1,85	1,85	2,15	2,15	8,00 (2,90-9,00)	2080 (500-2870)	3,85 A	1040	9,15	1,2 + 1,2 + 1,4 + 1,4	2,20	2,20	2,50	2,50	9,40 (4,00-10,50)	2070 (680-3140)	4,54 A	1035	9,15
10 [2] + 10 [2] + 12 + 15	1,75	1,75	2,00	2,50	8,00 (2,90-9,00)	2050 (520-2880)	3,90 A	1025	9,05	1,1 + 1,1 + 1,3 + 1,5	2,05	2,05	2,35	2,95	9,40 (4,20-10,50)	2040 (700-3080)	4,61 A	1020	8,95
10 [2] + 10 [2] + 15 + 15	1,65	1,65	2,35	2,35	8,00 (3,00-9,00)	2040 (520-2860)	3,92 A	1020	8,95	1,1 + 1,1 + 1,5 + 1,5	1,95	1,95	2,75	2,75	9,40 (4,20-10,50)	2020 (700-3070)	4,65 A	1010	8,85
10 [2] + 12 + 12 + 12	1,85	2,05	2,05	2,05	8,00 (2,90-9,10)	2030 (520-2860)	3,94 A	1015	8,95	1,2 + 1,3 + 1,3 + 1,3	2,05	2,45	2,45	2,45	9,40 (4,10-10,60)	2090 (700-3100)	4,50 A	1045	9,20
10 [2] + 12 + 12 + 15	1,70	1,95	1,95	2,40	8,00 (2,90-9,10)	2010 (520-2880)	3,98 A	1005	8,85	1,1 + 1,3 + 1,3 + 1,5	1,95	2,30	2,30	2,85	9,40 (4,20-10,60)	2070 (700-3080)	4,54 A	1035	9,15
12 + 12 + 12 + 12	2,00	2,00	2,00	2,00	8,00 (2,90-9,20)	2000 (530-2850)	4,00 A	1000	8,80	1,3 + 1,3 + 1,3 + 1,3	2,35	2,35	2,35	2,35	9,40 (4,20-10,60)	2110 (700-3080)	4,45 A	1055	9,30
12 + 12 + 12 + 15	1,90	1,90	1,90	2,30	8,00 (3,00-9,20)	1980 (530-2870)	4,04 A	990	8,70	1,2 + 1,2 + 1,2 + 1,5	2,20	2,20	2,20	2,80	9,40 (4,20-10,6)	2080 (700-3060)	4,52 A	1040	9,10

1) For wall type, hyde away, 60x60 cassette.
2) For one way cassette, floor/ceiling, floor console.
Connectivity restriction : CS-E/XE_MKE units are only compatible with CU-2E15LBE, CU-2E18LBE, CU-3E18LBE, CU-4E23LBE and CU-4E27CBPG outdoor units. No other outdoor unit can be connected.

SELF DIAGNOSIS DESCRIPTION AND CHECK POINT TABLE

In the event of breakdown, proceed as follows to detect the error code.

1. Press "CHECK" button at the remote control continuously for more than five seconds to turn on diagnosis mode. "_ _" will be displayed at the remote control LCD.
2. By pressing the TIMER "▲" button once, the next error code (if any) will be displayed; press "▼" button once, previous error code will be displayed.
3. If error code displayed matches the error code saved in unit memory (abnormality detected) Indoor PCB will buzzer for 4 seconds to indicate the correct error code.
4. If "CHECK" button is pressed again or without any operation for 30 seconds, the diagnosis mode will turn off.
5. Turn ON the unit and reset the error code by pressing the AC reset.

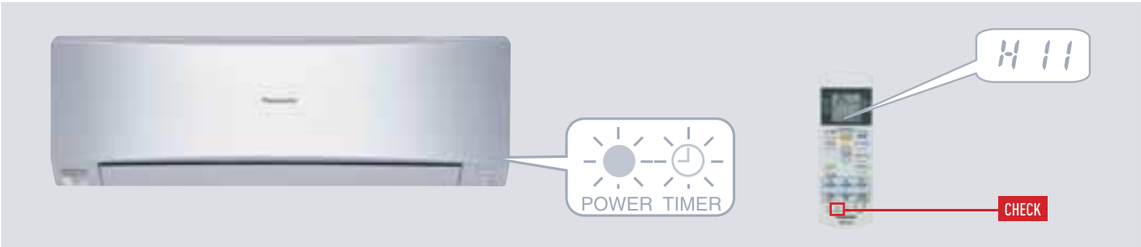

ERROR CODES TABLE

Warning: Electrical power must be disconnected when terminal protective cover is not in place to protect against electrocution.

Diagnosis Display	Abnormality / Protection Control	Diagnosis Method	Diagnosis Checkpoint
H11	Indoor/Outdoor abnormal communication	This trouble display appears when indoor/outdoor unit communication fails to be established after 30 or more seconds.	Measure the voltages of the indoor/outdoor unit communication cables, and check whether the voltage is being supplied properly to the outdoor unit or whether it is being returned from the outdoor unit to the indoor units.
H12	Indoor unit capacity unmatched	This trouble display appears when wrong in the total connection capacity and wrong connection in each capacity. The trouble is determined within 2 minutes after the power is turned on.	Check the total capacity of the units connected and check that the models are compatible for connection.
H14	Intake air temp. sensor	This trouble display appears when the intake air temperature has exceeded above 46ºC continuously for 2 minutes or dropped below -54ºC continuously for 5 seconds during operation.	This trouble display appears when a temperature which is impossibly high or low from a normal standpoint has been detected. Check the sensor, and if open-circuiting (0L or ∞) or short-circuit is not found, defective contact of the connector is to blame.
H15	Outdoor compressor temperature sensor abnormality	—	Check the sensor, and if open-circuit (more than 500 k) or (short-circuit) (less than 6.5 k) is not found, defective contact of the connector is to blame.
H16	Outdoor Current Transformer	CU-2E: When a value of under 1.5A has been detected for the total current during operation beyond the set capacity, the compressor operates with its operating frequency controlled to a maximum of 38Hz for 3 minutes, and if it continues to operate at a total current of under 1.5A for another 3 minutes, its operation stops. CU-3E/4E: When the total current has dropped below the set current level continuously for 20 seconds during operation beyond the set capacity, operation is stopped. Three minutes later, operation is started up again, and when the trouble occurs on 4 successive occasions, the trouble display appears (the timer lamp blinks).	1. Check the refrigerant cycle: Gas may be leaking (the amount of refrigerant is extremely low). 2. Check the control PCB: Check for a broken wire (open circuit) in the current transformer. (If an open circuit is found, replace the control PCB) In the case of a scroll compressor (DC motor), H16 is detected only when the regular compressor is operating.
H19	Indoor fan motor mechanism lock	· High-voltage PWM: When a state in which the fan motor speed is not synchronized with the control signal has been detected on 7 successive occasions. · Low-voltage PAM: When the fan lock detection signal has been detected on 7 successive occasions or it has been detected continuously for 25 seconds or when a state in which the fan motor speed is not synchronized with the control signal has been detected on 7 successive occasions: The trouble display appears (the timer lamp blinks).	1. Check the nature of the fan lockup trouble. 2. Check for disconnections of the fan motor connectors and for defects in contact, in the fan motor and in the control PCB.
H23	Indoor heat exchanger temp. sensor	This trouble display appears when a temperature of under approximately -40ºC or above approximately 80ºC has been detected by the heat exchanger temperature sensor continuously for 5 seconds. (This trouble is not detected during de-icing.)	This trouble display appears when a temperature which is impossibly high or low from a normal standpoint has been detected. Check the sensor, and if (open-circuit) (0L or ∞) or short-circuit is not found, defective contact of the connector or a defective control PCB is to blame.
H26	Ionizer Abnormality	—	1. Measure the voltages of the indoor unit communication cables, and check whether the voltage is being supplied properly. 2. Check the ionizer needle and grounding plate is dust free.
H27	Outdoor air temp. sensor	This trouble display appears when a temperature of under approximately -40ºC or above approximately 150ºC has been detected by the outside air temperature sensor for 2 to 5 seconds. (This trouble is not detected during de-icing.)	This trouble display appears when a temperature which is impossibly high or low from a normal standpoint has been detected. Check the sensor, and if open-circuiting (0L or ∞) or short-circuit isnot found, defective contact of the connector or a defective control PCB is to blame.
H28	Outdoor heat exchanger temp. sensor 1	This trouble display appears when a temperature of under approximately -60ºC or above approximately 110ºC has been detected by the heat exchanger temperature sensor for 2 to 5 seconds. (This trouble is not detected during de-icing.)	This trouble display appears when a temperature which is impossibly high or low from a normal standpoint has been detected. Check the sensor, and if open-circuiting (0L or ∞) or short-circuit is not found, defective contact of the connector or a defective control PCB is to blame.
H30	Outdoor discharge pipe temp. sensor	CU-2E: This trouble display appears when a temperature of under approximately -16ºC or above approximately 200ºC has been detected by the outlet temperature sensor for 2 to 5 seconds. CU-3E/4E: Disconnected discharge sensor · When the condensation temperature is higher than the discharge temperature + (plus) 6ºC, a sensor disconnection is detected, operation stops, and the trouble display appears (the timer lamp blinks).	This trouble display appears when a temperature which is impossibly high or low from a normal standpoint has been detected. Check the sensor, and if open-circuiting (0L or ∞) or short-circuit is not found, defective contact of the connector or a defective control PCB is to blame.
H32	Outdoor heat exchanger temp. sensor 2 (discharge pipe temp.)	This trouble display appears when a temperature of under approximately -60ºC or over approximately 110ºC has been detected continuously for 2 to 5 seconds by the outlet temperature sensor of the heat exchanger.	This trouble display appears when a temperature which is impossibly high or low from a normal standpoint has been detected. Check the sensor, and if open-circuiting (0L or ∞) or short-circuit is not found, defective contact of the connector or a defective control PCB is to blame.
H33	Indoor / Outdoor wrong connection	Indoor / Outdoor different model junction, 100V charge into 200V outdoor unit.	Check whether the voltage is being supplied properly to the outdoor unit or whether it is being returned from the outdoor unit to the indoor units.
H34	Outdoor heat sink temp. sensor	This trouble display appears when a temperature of under -43ºC or above 80ºC has been detected by the outdoor unit radiator fin sensor continuously for 2 seconds.	This trouble display appears when a temperature which is impossibly high or low from a normal standpoint has been detected. Check the sensor, and if open-circuiting (0L or ∞) or short-circuit is not found, defective contact of the connector or a defective control PCB is to blame.
H36	Abnormal gas pipe temp. sensor	This trouble display appears when a temperature of under approximately -45ºC or above approximately 149ºC has been detected by the outdoor unit gas side pipe temperature sensor continuously for 2 to 5 seconds.	This trouble display appears when a temperature which is impossibly high or low from a normal standpoint has been detected. Check the sensor, and if open-circuiting (0L or ∞) or short-circuit is not found, defective contact of the connector or a defective control PCB is to blame.
H37	Outdoor liquid pipe temp. sensor	This trouble display appears when a temperature of under -45ºC or above 149ºC has been detected by the outdoor unit liquid side pipe temperature sensor continuously for 2 seconds.	This trouble display appears when a temperature which is impossibly high or low from a normal standpoint has been detected. Check the sensor, and if open-circuiting (0L or ∞) or short-circuit is not found, defective contact of the connector or a defective control PCB is to blame.
H38	Indoor / Outdoor mismatch (brand code)	—	—
H39	Abnormal indoor operating unit or standBy units	This display appears in rooms other than one in which indoor freezing trouble has occurred when the pipes have been connected incorrectly, when an outdoor expansion valve is defective or when an expansion valve connector has become disconnected.	—
H41	Abnormal wiring or piping connection	CU-2E only This display appears when this kind of trouble is detected 3 minutes after a forced cooling operation was conducted for one room during the initial operation after the power was turned on. It appears when: · The indoor unit pipe temperature in a room without the capacity supply available at an outside air temperature above 5ºC has dropped by more than 20ºC to 5ºC or lower 3 minutes after the compressor started up. · The outdoor unit gas pipe temperature in a room without the capacity supply available has dropped by more than 5ºC to 5ºC or lower 3 minutes after the compressor started up.	—
H50	Ventilation failure	This display appears when ventilation motor is lock.	1. Check the voltage drop at pin 1 & 2 of CNVENT to have 14Vdc. 2. Check the ventilation hose condition from ventilation opening until tip cover. 3. Check air fl ow from tip cover by hand.
H51	Vacuum Nozzle Failure	This display appears when the vacuum nozzle stop.	This trouble display appears when suction nozzle stop at centre of the Filter Cleaning device: 1. Check the filter setting position. 2. Check the nozzle drive stepper motor running condition. This trouble display appears when suction nozzle stop at left side of Filter Cleaning device: 1. Check vacuum nozzle position. 2. Check the left limit switch switching function by multitester. This trouble display appears when suction nozzle stop at left side of Filter Cleaning Device: 1. Check the Right Limit Switch switching function by multitester.
H52	Limit Switch Failure	This display appears when both Limit Switch (left & right) detected short circuit.	1. Unplug the CNSIDESW connector and check Pin 1-2 and Pin 3-4 condition on PCB. 2. Check wiring condition at limit switch (left & right). 3. Check switching function of limit switch (left & right).
H97	Outdoor fan motor mechanism lock	CU-2E: When trouble, which is defi ned as a state in which the fan motor speed is not synchronized with the control signal has been detected on 5 successive occasions, has occurred for the third time in a 60-minute period and twice during a 30-minute period, the trouble display appears, and operation stops. CU-3E/4E: When the fan motor speed detected when its maximum output is demanded is below 30 rpm continuously for 15 seconds, the fan motor stops for 3 minutes and then restarted. When this happens on 16 occasions (the trouble display is cleared when the value is normal for 5 minutes), the H97 diagnostic symbol is stored in the memory, and the fan motor stops.	1. Check the nature of the fan lockup trouble. 2. Check for disconnections of the fan motor connectors and for defects in contact, in the fan motor and in the control PCB.
H98	Indoor high pressure protection	The restriction on the compressor frequency is started when the temperature of the indoor unit heat exchanger source is between 50ºC and 52ºC, the compressor stops at a temperature from 62ºC to 65ºC, it is restarted 3 minutes later at below 62ºC to 65ºC, and the restriction on the compressor frequency is released at a temperature between 48ºC and 50ºC. (No trouble display appears.)	1. Check the indoor unit heat exchanger temperature sensor (check for changes in its characteristics and check its resistance): Symptoms include no hot start when operation is started, a failure of the thermostat to turn on (no outdoor unit operation). And frequent repetition of stopping and startup. 2. Check also for short circuits indoors and clogging of the air fi lters.
H99	Indoor operating unit freezing	The restriction on the compressor frequency is started when the indoor unit heat exchanger temperature is between 8ºC and 12ºC. Operation stops if a temperature below 0ºC continues for 6 minutes. Three minutes later, operation is started up at a temperature from 3ºC to 8ºC. The restriction on the compressor frequency is released at a temperature between 13ºC and 14ºC.	1. A cooling or dry mode operation conducted at a low outside air temperature is mainly to blame: this is not indicative of any malfunctioning. If the outside air temperature rises during automatic operation in the winter months, the dry mode operation is selected. The H99 diagnostic display also appears at such a time. 2. Check the refrigerating cycle: Gas may be leaking (the amount of refrigerant is low) or a pipe may be broken, etc. 3. Check also for short circuits indoors and clogging of the air fi lters.
F11	4-way valve switching failure	CU-2E: When the indoor unit heat exchanger temperature is under -5ºC during a warming operation or above 45ºC during a cooling or dry mode operation four minutes after the compressor has started up, the F11 diagnostic symbol is stored in the memory, and operation stops. 3 minutes later, operation is restarted. This trouble display appears when this happens on 4 occasions in a 30 minutes period. CU-3E/4E: When a difference of 0ºC to 5ºC has been detected between the outdoor unit heat exchanger temperature and liquid side pipe temperature on 5 occasions, the trouble display appears.	1. Check the 4-way valve coil: Check that no power is supplied to the coil during cooling and dry mode operations, and that power is supplied during heating operations. Inspect the coil for broken wires (open circuits). 2. If the coil is troublefree, the switching action of the 4-way valve may be defective.
F17	Indoor standBy units freezing	CU-2E: After the operation of one indoor unit stops continuously for 5 minutes. The hole operation stops when the stopping indoor unit pipe temperature is under -5ºC continuously for 1 minute or under 0ºC continuously for 5 minutes, and operation restarts after 3 minutes. This trouble display appears if that trouble happens on 3 occasions in a 30 minutes period. CU-3E/4E: When the difference of an intake temperature (room temperature sensor) and the indoor unit heat exchanger temperature (piping sensor) is higher than 10ºC or an indoor unit heat exchanger temperature of below -1ºC has been detected continuously for 5 minutes, operation stops. Three minutes later, it is started up, and the trouble display appears when this has occurred on 3 consecutive occasions.	1. Check the refrigerating cycle: Expansion valve leakage. 2. Check the indoor unit pipe temperature sensor (check for changes in its characteristics and check its resistance).
F90	PFC circuit protection (CU-2E) Main circuit low voltage (CU-3E/4E)	CU-2E: When the reputation of the compressor is not synchronized with the control signal, the F93 diagnostic display is stored in the memory, and operation stops. 3 minutes later, operation is restarted. This trouble display appears when this happens on 4 occasions in a 20 minutes period. CU-3E/4E: When a state in which the rotation of the compressor is not synchronized with the control signal has been detected on 8 successive occasions, operation stops, and the trouble display appears.	1. To check whether the 2-way or 3 -way valve has been left open by mistake, operation is performed for one to several minutes after the compressor has started up, F93 is stopped in the memory as the symptom, and operation stops. 2. Check the Inverter circuit (for open circuits) in the control PCB: Check the IPM base current (6 locations) within 3 minutes after the power has been turned back on. As the symptom, F93 is stored in the memory 30 seconds after the compressor has started up, and operation stops. The trouble display appears after 4 restarts. 3. Check for broken wires (open circuits) in the compressor winding: Approximately 1 ohm under normal conditions for each phase (same symptom as in 2.)
F91	Refrigeration cycle abnormality	CU-2E: When the rotation speed of the compressor exceeds the setting frequency and the total current is 1.5A or higher to 1.9A or lower continuously for 5 minutes, operation stops if the indoor unit heat exchanger temperature is higher than 20ºC during cooling or dry operation or if it is under 25ºC during heating. Three minutes later, it is restarted, and if the trouble occurs on 2 consecutive occasions in a 20 minutes period, the trouble display appears. CU-3E/4E: When the compressor frequency is above 55 Hz and the current drops below the prescribed level continuously for 7 minutes, operation stops, and it is restarted 3 minutes later. When the compressor discharge temperature has exceeded the setting and the expansion valve has remained fully open for 80 seconds, operation stops, and it is restarted 3 minutes later. When the stopping described above has occurred on 4 occasions, operation stops, and the trouble display appear.	Check the refrigerating cycle: Gas may be leaking (more than onehalf of the volume of the gas has gone). The diagnostic displays resulting from a gas leak generally change in the following sequence depending on the extent of the gas leak: H99 → F97 → F91 → H16. The range of this trouble (F91) is limited. (Compressor protection at the start of the season).
F93	Compressor abnormal revolution	CU-2E: When the reputation of the compressor is not synchronized with the control signal, the F93 diagnostic display is stored in the memory, and operation stops. 3 minutes later, operation is restarted. This trouble display appears when this happens on 4 occasions in a 20 minutes period. CU-3E/4E: When a state in which the rotation of the compressor is not synchronized with the control signal has been detected on 8 successive occasions, operation stops, and the trouble display appears.	1. To check whether the 2-way or 3 -way valve has been left open by mistake, operation is performed for one to several minutes after the compressor has started up, F93 is stopped in the memory as the symptom, and operation stops. 2. Check the Inverter circuit (for open circuits) in the control PCB: Check the IPM base current (6 locations) within 3 minutes after the power has been turned back on. As the symptom, F93 is stored in the memory 30 seconds after the compressor has started up, and operation stops. The trouble display appears after 4 restarts. 3. Check for broken wires (open circuits) in the compressor winding: Approximately 1 ohm under normal conditions for each phase (same symptom as in 2.)
F95	Outdoor high pressure protection	CU-2E only: When the temperature of the outdoor unit heat exchanger temperature sensor exceeds 63ºC, the F95 diagnostic symbol is stored in the memory, and operation stops. 3 minutes later, operation is restarted at a temperature below 56ºC. This trouble display appears when this happens on 4 occasions in a 20-minutes period.	1. Check the outdoor unit heat exchanger temperature sensor (check for changes in its characteristics and check its resistance). 2. Check whether something is interfering with the dissipation of the heat outdoors.
F96	Power transistor module or compressor overheating (CU-2E) Compressor high discharge temperature (CU-3E/4E)	CU-2E: Heating is detected inside the IPM which shuts itself off, the F96 diagnostic symbol is stored in the memory, and operation stops. 3 minutes later, operation is restarted. The trouble display appears when this happens on 4 occasions in a 30-minutes period. CU-3E/4E: When this trouble is detected from the electrical parts radiation fi n temperature sensor and OLP output during operation, operation stops, and it is restarted 3 minutes later. If the trouble occurs on 4 occasions, operation stops, and the trouble display appears.	1. Something may be interfering with the dissipation of the heat outdoors or the outdoor unit fan may be defective. (The outdoor unit fan is not running.). 2. Defective IPM (outdoor unit control PCB). 3. Gas leaks. 2-way or 3-way valve is not opened.
F97	Compressor high discharge temperature	When the temperature of the compressor temperature sensor exceeds 112 to 120ºC, the F97 diagnostic symbol is stored in the memory, and operation steps. Two minutes later, operation is restarted at a temperature below 107 to 110ºC. CU-2E: The trouble display appears and operation stops when this happens on 4 occasions in a 20 minutes period. CU-3E/4E: This trouble display appears and operation stops when this happens on 6 occasions (it is cleared when the operation is normal for 20 minutes).	1. Check the refrigerating cycle: Gas may be leaking (the amount of refrigerant is low). The stopping of the outdoor unit from time to time is a symptom of this trouble. 2. When operation steps with this trouble display appearing, check the compressor temperature sensor (check for changes in its characteristics and check its resistance). 3. Something may be interfering with the dissipation of the heat outdoors or the outdoor unit fan may be defective. (The fan will not run because of an open circuit.) (The protection function may be activated by an overload, and the F97 trouble display will remain stored in the memory.).
F98	Total running current protection	CU-2E: When the total current exceeds the setting, the F98 diagnostic display is stored in the memory, and operation stops. 3 minutes later, operation is restarted. The trouble display appears and operation stops when this happens on 3 occasions in a 20-minutes period. CU-3E/4E: When the total current exceeds the setting (17A to 20A), frequency control is started, and if it then exceeds the setting, operation stops, and the trouble display appears.	1. Check the AC voltage at the outdoor unit terminal board during operation: The voltage drop must be within 5% of the voltage when operation has stopped (± 110% of rated voltage even during operation). If the voltage drop exceeds 5% or if the voltage changes suddenly, inspect whether the power supply cord and indoor/outdoor unit connection cables are too long or too small in diameter, etc. 2. Check whether something is interfering with the dissipation of the heat outdoors (during cooling operations): Normally, the capacity is limited by the current so that the outdoor unit don't stop, and the diagnostic display does not appear.
F99	DC peak detection	CU-2E: If the current level exceeds 22.5A after startup, the compressor stops, and it is restarted 3 minutes later. When this occurs on 7 consecutive occasions, operation stops, and the trouble display appears. CU-3E/4E: When "Output current trouble", which occurs when the prescribed current level is exceeded, has occurred on 16 consecutive occasions, operation stops, and the trouble display appears.	1. Check whether the compressor is defective (locked up or shorted winding). Check the outdoor unit control PCB.

OPTIONAL ACCESSORIES

REPLACEMENT ANTI-ALLERGEN FILTER

CS-E9/12/15/18/21HKEA

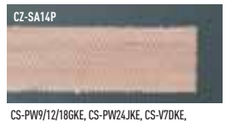

CS-PW9/12/18GKE, CS-PW24JKE, CS-V7DKE, CS-V9DKE, CS-V12DKE, CS-V18DKE, CS-V24DKE, CS-V28EKE, CS-E15DTEW, CS-E18DTEW, CS-E21DTES

CS-RE9/12/18/24JKE-1

PIPE REDUCER (for Multi)

CZ-MA1P is to be used to reduce the connection size on the indoor unit to 3/8". CS-E15/18/MKEW, CS-E15/18DTEW, CS-E15/18HB4EA, CS-E15/18JD3EA, CS-E18GFEW, CS-E18GFEW, CS-XE15/18MKEW

PIPE EXPANDER (for Multi)

CZ-MA2P is to be used to increase the connection size on the outdoor unit to 1/2". CS-E21MKEW, CS-XE21MKEW, CS-E21JB4EA

WELCOME TO THE COMMERCIAL RANGE

Welcome to Commercial range. Welcome to healthier air. A range which confirms its commitment to the environment. All our air conditioners use R410A gas. This environmentally friendly gas is totally harmless for the ozone layer. Our Inverter compressors optimise performance and thus reduce energy costs.
Here are some of your new air conditioner's major features.

A class energy saving INVERTER+

INVERTER + SYSTEM. Inverter plus products improve on the characteristics of standard Inverter range by over 20%. This means 20% less consumption and 20% off your electric bill. A Inverter plus is also A class on cooling and heating mode.

A class energy saving INVERTER

INVERTER SYSTEM. The Inverter range provides greater efficiency, more comfort and less noise than classic inverter units. The inverter system provides more precise temperature control, without highs and lows, and keeps the ambient temperature constant with lower energy consumption and a significant reduction in noise and vibration levels.

prevention allergy filter ALLERU-BUSTER

SUPER ALLERU-BUSTER FILTER. The super alleru-buster filter eliminates the allergens it captures. It combines three functions in one (anti-allergen, anti-virus and anti-bacteria) to keep room air clean and healthy.

down to -20°C in heating mode OUTDOOR TEMPERATURE

DOWN TO -20°C IN HEAT PUMP. The air conditioner works in heat pump mode with an outdoor temperature as low as -15°C.

down to -15°C in heating mode OUTDOOR TEMPERATURE

DOWN TO -15°C IN HEATING ONLY MODE. The air conditioner works in heating only mode with an outdoor temperature of -15°C.

down to -15°C in cooling mode OUTDOOR TEMPERATURE

DOWN TO -15S°C IN COOLING ONLY MODE. The air conditioner works in cooling only mode with an outdoor temperature of -15°C.

environmentally friendly refrigerant R410A

R410A. Environmentally friendly refrigerant.

CE

EUROVENT CERTIFIED PERFORMANCE www.eurovent-certification.com

QUALITY SYSTEM SIRIM

ISO 9000 Series Certification

CERTIFIED TO MS ISO 9002:1994
Panasonic HA Air-Conditioning (M) Sdn. Bhd. (PHAAM)
(Formerly know as Matsushita Industrial Corp. Sdn. Bhd.)
Registration No.: AR 0866

ENVIRONMENTAL SYSTEM SIRIM

UKAS ENVIRONMENTAL MANAGEMENT 074

Enviroment Management Systems Approval Certificate

CERTIFIED TO MS ISO 14001:1997
Panasonic HA Air-Conditioning (M) Sdn. Bhd. (PHAAM)
(Formerly know as Matsushita Industrial Corp. Sdn. Bhd.)
Certification No.: M015802127

www.tuv.com TÜVRheinland ID 0091005766

COMMERCIAL RANGES	INVERTER +	INVERTER	HEAT PUMP

LOW STATIC PRESSURE HIDE-AWAY FS TYPE

Panasonic has also thought of integrating its technology into current architecture. Hide-away models are the answer. The small-sized indoor units are easily accommodated in false ceilings.

HIGH STATIC PRESSURE HIDE-AWAY FS TYPE

Panasonic has developed hide-away units with high static pressure power, ideal for business centres.

60X60 CASSETTE TYPE

Panasonic's 60x60 cassettes are particularly suitable for small or medium-sized offices. Their dimensions fit perfectly into European 60x60 detachable ceiling panels.

90X90 FS CASSETTE TYPE

Panasonic has developed air conditioners with revolutionary designs in both format and function. As an added benefit, they offer the option of selecting airflow patterns in two or four different directions, at the click of a button.

CEILING TYPE

Especially suited for shopping centres or very large areas, these air conditioners are practically invisible due to their slimness, lightness and absolutely silent operation.

HIGH PRESSURE HIDE-AWAY US TYPE

Panasonic has developed hide-away units with high static pressure power, ideal for business centres.

Flexi System Series

FS TECHNOLOGY

FS INVERTER, IMPROVED ENERGY PERFORMANCE

All Panasonic's FS Inverter series models are equipped with DC Inverters to give operation with improved energy efficiency. Their new quiet, highly efficient design reduces operating costs.

1. Hyper Wave Inverter

The FS series quickly warms the room up to the set temperature and maintains it within the comfort zone while ensuring energy efficiency and savings.

2. High efficiency compressor

A powerful neodymium magnet helps make the motor more compact.

3. New diagonal fan

The following improvements minimise air resistance:

REDUCING AIR RESISTANCE

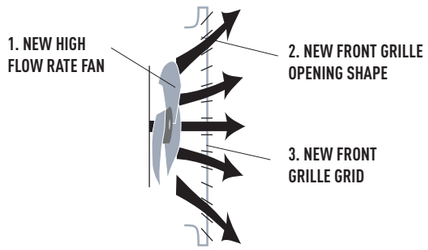

Space-saving design

Thanks to its improved fan, the outdoor unit can be installed in smaller spaces where conventional models would not fit. It achieves higher efficiency without sacrificing quietness.

FOR CASSETTE AND CEILING MODELS SUPER ALLERU-BUSTER FILTER

prevention allergy filter
ALLERU-BUSTER

SUPER alleru-buster filter uses three types of functional materials that make it possible to inactivate various harmful airborne elements including allergens, viruses and bacteria. This filter is available as an option.

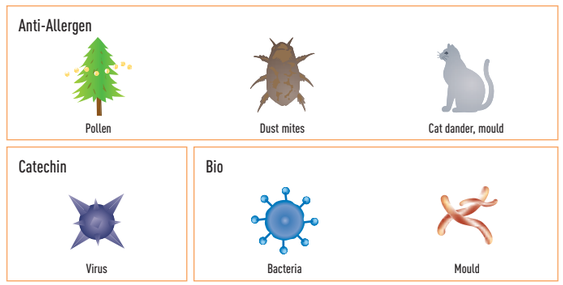

CZ-SA11P (For cassette type) // CZ-SA12P (For ceiling type)

CONTROL UNIT

Maximum comfort in every detail

The Panasonic FS series includes a control unit for precise selection of the desired degree of comfort. It offers control of detailed parameters for adjusting air quality and flow.

1. Multi comfort air control

Newly developed control technology offers various airflow angle options. Select from the 3-pattern auto swings to avoid direct exposure to the air (total 50-degree swing width).

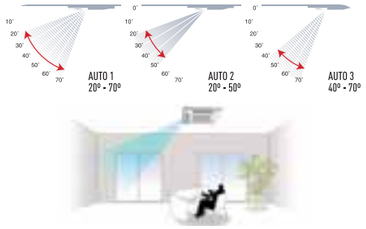

2. Weekly timer

Weekly timer setting (each day of a week) is available to control the air conditioner. Max. 6 settings/day and 42 settings/week can be run.

HOW TO SET

3. Odour wash

Odour Wash reduces any unpleasant odours produced by the air conditioner's heat exchanger.

4. Economy mode

An approximate 20% energy-saving operation is achieved. The air conditioner analyses ambient conditions and approaches the temperature set by the user in 0.5 degree steps (up to a maximum of 2 degrees), thus saving energy.

5. Ventilation

When an external device such as a fan is connected to the indoor unit, the fan's ON/OFF switch can be controlled by the wired remote control

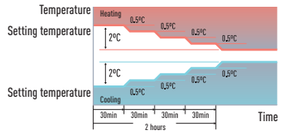

* Whilst operating in the cooling mode at the remote control set temperature of 25 under the cooling standard temperature conditions.
Can be operated with the wireless remote control.

FS INDOOR UNITS

Hide-away range

Environmentally friendly, efficient and easy to install.
- Save 26% of space.
- Easy installation in false ceilings with limited height.
- Dimensions: 120 x 25 x 65 cm (W x H x D).

New sirocco fan

High-performance, large diameter fan. Designed precisely for airflow trajectory. The key to saving space.

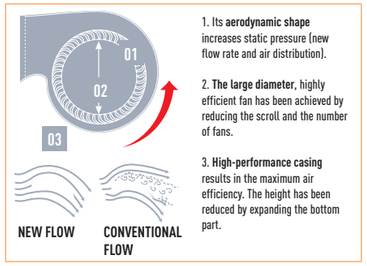

1. Its **aerodynamic shape** increases static pressure (new flow rate and air distribution).

2. **The large diameter**, highly efficient fan has been achieved by reducing the scroll and the number of fans.

3. **High-performance casing** results in the maximum air efficiency. The height has been reduced by expanding the bottom part.

SMALLER THAN CONVENTIONAL UNITS

THE MOST COMPACT IN THE INDUSTRY

Cassette range

Advanced unit design: First-in-class indoor unit
- Selectable airflow rate and direction.
- Silent operation.
- Customised programming.

The indoor cassette unit is equipped with a hi-tech turbo fan. Its innovative blade design produces higher air speed and flow rate. The DC fan motor offers complete control. It is almost twice as efficient as a conventional motor and enables comfortable operation and energy savings.
Likewise, the possibility of connecting two indoor units to one outdoor unit means considerable savings across the board.

Improved air inlet and outlet

The new three-dimensional blade shape stabilises airflow.
Optimising layout of the indoor heat exchanger and the fan allows an increase in fan diameter.

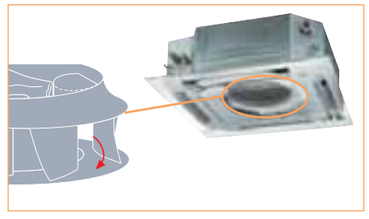

Ceiling range

Trouble-free installation
- Easy setup.
- Multi-way connection.
- Broad range of air outlets.

ANTI-MOULD LONG-LIFE AIR FILTER

POSSIBLE CONNECTIONS

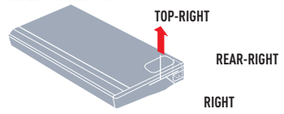

BROAD RANGE OF AIR OUTLETS

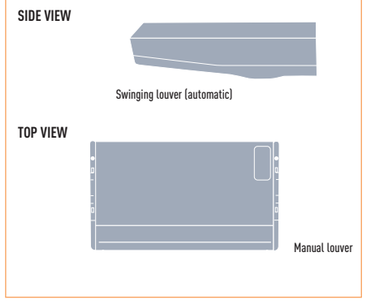

INVERTER + OUTDOOR UNITS

- Greater energy savings
- More installation options
- Quieter

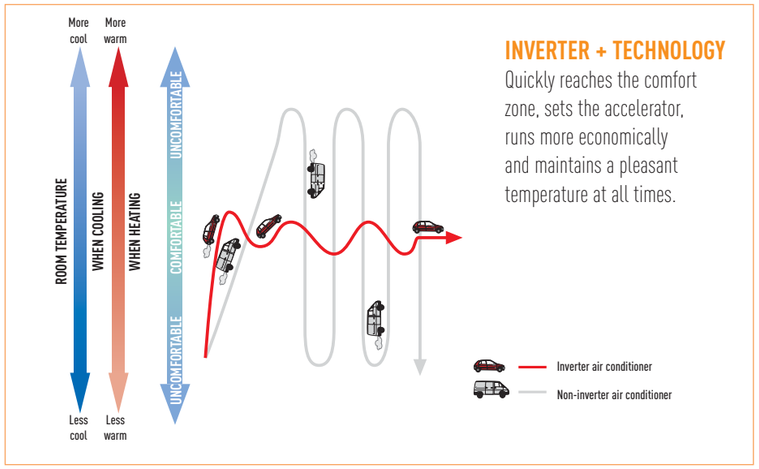

INVERTER + TECHNOLOGY

Quickly reaches the comfort zone, sets the accelerator, runs more economically and maintains a pleasant temperature at all times.

HIGH EFFICIENCY COMPRESSOR

COMPRESSOR OPERATION INVERTER / HEAT PUMP.

Inverter / Heat Pump

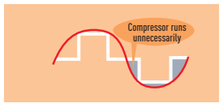

The heat pump waveform deviates from the motor waveform, so power is wasted.

Hyper wave Inverter

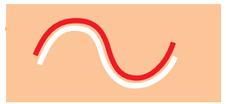

The compressor speed pattern perfectly fits the thermal needs at all times.

Compare this to a car rounding a corner

Power is lost when the car swings off course.

When the car stays on course, there is no power loss.

Energy-saving operation

The new design provides quiet, highly efficient operation and reduces running costs.

High efficiency compressor

The new electric motor achieves lower distortion of the magnetic field to give greater efficiency.

INVERTER + INSTALLATION FLEXIBILITY

INSTALLATION WITH SIGNIFICANT HEIGHT DIFFERENCES WITHOUT LOSS OF EFFICIENCY.

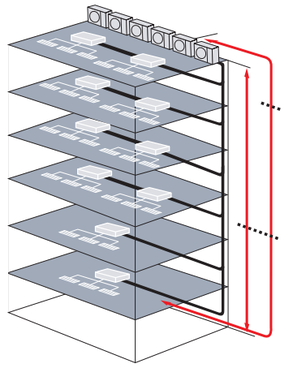

New more compact outdoor units save space

Thanks to the new outdoor unit design, installation can be carried out in more limited spaces.

Operating range

The units can be used for cooling even when the outdoor temperature is extremely low. This is ideal for spaces which need cooling even in winter.

Normal cooling conditions	-15ºC to 43ºC (outside temperature)
Normal heating conditions	-20ºC to 24ºC (outside temperature)

Installation space

A Before 50 cm, now only 30 cm
B Outdoor only 32 cm deep

YL INVERTER OUTDOOR UNITS

- More compact outdoor units
- Increased pipe length
- Installation using existing pipes

NEW OUTDOOR UNITS INVERTER YL

The new commercial YL Inverter range: more compact, easier to install and with improved performance. All these outdoor units are perfectly compatible with indoor units of the low silhouette hide-away, high pressure hide-away, cassette and ceiling types.

2.5 H.P.	3.0 H.P.	4.0 H.P.	5.0 H.P.
CU-YL24HBE5	CU-YL28HBE5	CU-YL34HBE5	CU-YL43HBE5

FLEXIBLE RETROFITTING TO EXISTING INSTALLATIONS

COMPATIBILITY OF FS INVERTER AND INVERTER + SYSTEMS WITH VARIOUS PIPE DIAMETERS.

Panasonic provides this new tool for retrofitting its equipment to any existing air conditioning installation. By using this simple compatibility table you will be able to check how the equipment works with different pipe diameters. Pipes should be cleaned correctly in all cases, taking special care to fully remove the remains of R22 refrigerating gas from the cooling circuit in systems that use that refrigerant.

	Ø Liquid pipe	1/4" (0.8mm)			3/8" (0.8mm)			1/2" (0.8mm)	
	Ø Gas pipe	3/8" (0.8mm)	1/2" (0.8mm)	5/8" (1.0mm)	1/2" (0.8mm)	5/8" (1.0mm)	3/4" (1.0mm)	5/8" (1.0mm)	3/4" (1.0mm)
2.5 H.P.	Max. pipe length	No	No	10m	No	50m 1) - 30m 2)	No	25m	No
	Max. height			10m		30m 1) - 25m 2)		15m	
	Additional load			-		50g/m		80g/m	
3.0 H.P.	Max. pipe length	No	No	10m	No	50m 1) - 30m 2)	No	25m	No
	Max. height			10m		30m 1) - 25m 2)		15m	
	Additional load			-		50g/m		80g/m	
4-6 H.P.	Max. pipe length	No	No	10m	No	50m 1) - 30m 2)	25m	25m	25m
	Max. height			10m		30m 1) - 25m 2)	15m	15m	15m
	Additional load			-		80g/m	80g/m	100g/m	100g/m

1) Inverter + range (CU-L)
2) Inverter range (CU-YL)

Correct | Possible | Not recommended | Installation not possible

Minimum piping lengh= 7.5m for all systems.

EASY INSTALLATION YL INVERTER

THANKS TO THE IMPROVEMENTS IN THE NEW FS SERIES INVERTER YOU SAVE SPACE AND INSTALLATION TIME.

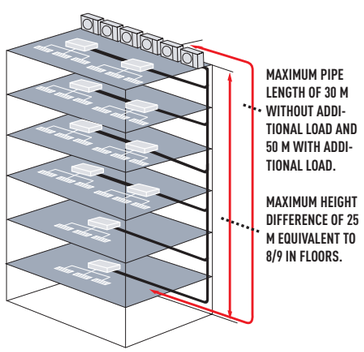

New more compact units

The new outdoor units are up to 40% smaller (model CU-YL34HBE5) than the previous range.

Operating range

The units can be used for cooling even when the outdoor temperature is extremely low. This is ideal for spaces which need cooling even in winter.

Normal cooling conditions	-15ºC to 43ºC (outside temperature)
Normal heating conditions	-20ºC to 24ºC (outside temperature)

Installation space

A Before 50 cm, now only 30 cm
B Outdoor only 32 cm deep

RANGE OF INDOOR UNITS FS

		1.0 H.P.	1.5 H.P.	2.0 H.P.	2.25 H.P.	2.5 H.P.	3.0 H.P.	4.0 H.P.	5.0 H.P.	6.0 H.P.	8.0 H.P.	10 H.P.
4-Way 60x608	INVERTER	CS-E10KB4EA	CS-E15HB4EA	CS-E18HB4EA	CS-E21JB4EA							
4-Way 90x90 cassette	INVERTER +					CS-F24DB4E5	CS-F28DB4E5	CS-F34DB4E5	CS-F43DB4E5	CS-F50DB4E5		
	INVERTER					CS-F24DB4E5	CS-F28DB4E5	CS-F34DB4E5	CS-F43DB4E5			
	Heat pump		CS-F14DB4E5	CS-F18DB4E5		CS-F24DB4E5	CS-F28DB4E5	CS-F34DB4E5	CS-F43DB4E5	CS-F50DB4E5		
	Cooling only		CS-F14DB4E5	CS-F18DB4E5		CS-F24DB4E5	CS-F28DB4E5	CS-F34DB4E5	CS-F43DB4E5	CS-F50DB4E5		
Low static pressure hide-away	INVERTER +					CS-F24DD3E5	CS-F28DD3E5	CS-F34DD3E5	CS-F43DD3E5	CS-F50DD3E5		
	INVERTER	CS-E10KD3EA	CS-E15JD3EA	CS-E18JD3EA		CS-F24DD3E5	CS-F28DD3E5	CS-F34DD3E5	CS-F43DD3E5			
	Heat pump		CS-F14DD3E5	CS-F18DD3E5		CS-F24DD3E5	CS-F28DD3E5	CS-F34DD3E5	CS-F43DD3E5	CS-F50DD3E5		
	Cooling only		CS-F14DD3E5	CS-F18DD3E5		CS-F24DD3E5	CS-F28DD3E5	CS-F34DD3E5	CS-F43DD3E5	CS-F50DD3E5		
High static pressure hide-away	INVERTER +					CS-F24DD2E5	CS-F28DD2E5	CS-F34DD2E5	CS-F43DD2E5	CS-F50DD2E5		
	INVERTER					CS-F24DD2E5	CS-F28DD2E5	CS-F34DD2E5	CS-F43DD2E5			
	Heat pump					CS-F24DD2E5	CS-F28DD2E5	CS-F34DD2E5	CS-F43DD2E5	CS-F50DD2E5		
	Cooling only					CS-F24DD2E5	CS-F28DD2E5	CS-F34DD2E5	CS-F43DD2E5	CS-F50DD2E5		
Ceiling	INVERTER +					CS-F24DTE5	CS-F28DTE5	CS-F34DTE5	CS-F43DTE5	CS-F50DTE5		
	INVERTER					CS-F24DTE5	CS-F28DTE5	CS-F34DTE5	CS-F43DTE5			
	Heat pump			CS-F18DTE5		CS-F24DTE5	CS-F28DTE5	CS-F34DTE5	CS-F43DTE5	CS-F50DTE5		
	Cooling only			CS-F18DTE5		CS-F24DTE5	CS-F28DTE5	CS-F34DTE5	CS-F43DTE5	CS-F50DTE5		
High pressure hide-away	INVERTER										S-200PE1E8	S-250PE1E8

RANGE OF OUTDOOR UNITS

	1.0 H.P.	1.5 H.P.	2.0 H.P.	2.25 H.P.	2.5 H.P.	3.0 H.P.	4.0 H.P.	5.0 H.P.	6.0 H.P.	8.0 H.P.	10 H.P.
INVERTER +					CU-L24DBE5 [I]	CU-L28DBE5 [I]	CU-L34DBE5 [I] / L34DBE8 [III]	CU-L43DBE5 [I] / L43DBE 8 [III]	CU-L50DBE8 [III]		
INVERTER	CU-E10HBEA [I]	CU-E15HBEA [I]	CU-E18HBEA [I]	CU-E21HBEA [I]	CU-YL24HBE5 [I]	CU-YL28HBE5 [I]	CU-YL34HBE5 [I]	CU-YL43HBE5 [I]		U-200PE1E8 [III]	U-250PE1E8 [III]
Heat pump		CU-B14DBE5 [I]	CU-B18DBE5 [I]		CU-B24DBE5 [I]	CU-B28DBE5 [I] / B28DBE8 [III]	CU-B34DBE5 [I] / B34DBE8 [III]	CU-B43DBE8 [III]	CU-B50DBE8 [III]		
Cooling only		CU-J14DBE5 [I]	CU-J18DBE5 [I]		CU-J24DBE5 [I] / J24DBE8 [III]	CU-J28DBE5 [I] / J28DBE8 [III]	CU-J34DBE5 [I] / J34DBE8 [III]	CU-J43DBE8 [III]	CU-J50DBE8 [III]		

TECHNICAL ZOOM

- EASY INSTALLATION ON THE DETACHABLE EUROPEAN 60X60 CEILING GRID
- OPERATION DOWN TO -10ºC IN COOLING AND HEATING MODES
- PIPING LENGTH UP TO 30M
- MAXIMUM ELEVATION DIFFERENCE UP TO 20M
- ULTRA COMPACT OUTDOOR UNITS FOR EASY INSTALLATION
- 24 HOUR ON/OFF TIMER

4-WAY 60X60 CASSETTE FS // INVERTER TYPE

Small and powerful, ideal for offices and restaurants

A class energy saving INVERTER

prevention allergy filter ALLERU-BUSTER

OPTIONAL

INCLUDED WITH THE INDOOR UNIT

CU-E10HBEA CU-E18HBEA
CU-E15HBEA CU-E21HBEA

			1 H.P.	1.5 H.P.	2 H.P.	2.25 H.P.
KIT			KIT-E10-HB4EA	KIT-E15-HB4EA	KIT-E18-HB4EA	KIT-E21-JB4EA
Indoor			CS-E10KB4EA	CS-E15HB4EA	CS-E18HB4EA	CS-E21JB4EA
Outdoor			CU-E10HBEA	CU-E15HBEA	CU-E18HBEA	CU-E21HBEA
Panel			CZ-BT20E	CZ-BT20E	CZ-BT20E	CZ-BT20E
Wireless control	Included with kit		Included with indoor unit	Included with indoor unit	Included with indoor unit	Included with indoor unit
Cooling capacity	Nominal (Min - Max)	kW	2.50 (0.60 - 3.20)	4.10 (0.9 - 4.8)	4.8 (0.9 - 5.70)	5.9 (0.9 - 6.3)
	Nominal (Min - Max)	kCal/h	2,150 (516 - 2,752)	3,530 (770 - 4,130)	4,130 (770 - 4,900)	5,070 (770 - 5,420)
EER [1]	Nominal (Min - Max)		4.03 (4.14 - 3.68) A	3.15 (3.48 - 3.27) B	3.14 (3.53 - 2.95) B	2.88 (3.52 - 2.86) C
Power input Cooling	Nominal (Min - Max)	kW	0.620 (0.145 - 0.870)	1.300 (0.255 - 1.170)	1.539 (0.255 - 1.930)	2.050 (0.255 - 2.200)
Heating capacity	Nominal (Min - Max)	kW	3.20 (0.60 - 5.10)	5.10 (0.9 - 6.20)	5.60 (0.90 - 7.10)	7 (0.9 - 8.0)
	Nominal (Min - Max)	kCal/h	2,752 (516 - 4,300)	4,390 (770 - 5,330)	4,820 (770 - 6,110)	6,020 (770 - 6,880)
COP [1]	Nominal (Min - Max)		3.90 (4.80 - 3.51) A	2.88 (3.46 - 2.84) D	2.95 (3.46 - 2.90) D	2.86 (3.46 - 2.84) D
Power input Heating	Nominal (Min - Max)	kW	0.820 (0.125 - 1.450)	1.770 (0.260 - 2.180)	1.900 (0.260 - 2.450)	2.450 (0.260 - 2.820)
Annual Energy Consumption [2]		kWh	310	650	765	1,025
INDOOR UNIT						
Air Volume	Cooling / Heating	m^3/h	630 / 648	630 / 648	660 / 690	768 / 840
Moisture removal volume		l/h	1.5	2.3	2.6	3.3
Sound pressure Level [3]	Cooling (Hi / Lo / S-Lo)	dB(A)	34 / 26 / 23	34 / 26 / 23	36 / 28 / 25	41 / 33 / 30
	Heating (Hi / Lo / S-Lo)	dB(A)	35 / 28 / 25	35 / 28 / 25	37 / 29 / 26	42 / 34 / 31
Sound power Level	Cooling (Hi)	dB	47	47	49	54
	Heating (Hi)	dB	58	48	50	55
Dimensions	Indoor (H x W x D)	mm	260 x 575 x 575	260 x 575 x 575	260 x 575 x 575	260 x 575 x 575
	Panel (H x W x D)	mm	51 x 700 x 700	51 x 700 x 700	51 x 700 x 700	51 x 700 x 700
Net weight	Indoor	Kg	18	18	18	18
	Panel	Kg	2.5	2.5	2.5	2.5
Dust filter			Yes	Yes	Yes	Yes
Antiallergic filter	Optional		CZ-SA13P	CZ-SA13P	CZ-SA13P	CZ-SA13P
OUTDOOR UNIT						
Power source		V	220 - 240	220 - 240	220 - 240	220 - 240
Connection		mm^2	4 x 1.5 to 2.5	4 x 1.5 to 2.5	4 x 1.5 to 2.5	4 x 1.5 to 2.5
Current Cooling	Nominal (Min / Max)	A	2.9	6.0	7.0	9.2
Current Heating	Nominal (Min / Max)	A	3.8	8.0	8.5	10.9
Air Volume	Cooling / Heating	m^3/h	1,728	2,808	2,400	2568
Sound pressure Level [3]	Cooling (Hi)	dB(A)	45	45	47	49
	Heating (Hi)	dB(A)	46	47	48	49
Sound power Level	Cooling (Hi)	dB	58	58	60	62
	Heating (Hi)	dB	59	60	61	62
Dimensions	H x W x D	mm	540 x 780+70 [4] x 289	750 x 875+70 [4] x 345	750 x 875+70 [4] x 345	750 x 875+70 [4] x 345
Net weight		Kg	35	48	48	48
Piping connections	Liquid pipe	inch (mm)	1/4" (6.35)	1/4" (6.35)	1/4" (6.35)	1/4" (6.35)
	Gas pipe	inch (mm)	3/8" (9.52)	1/2" (12.70)	1/2" (12.70)	1/2" (12.70)
Refrigerant Loading	R410A	Kg	1.15	1.23	1.06	1.15
Elevation difference (in/out) [5]	Max	m	15	15	20	20
Piping length	Min - Max	m	3 - 20	3 - 20	3 - 30	3 - 30
Piping length without refrigerent increase	Max	m	10	10	10	10
Additional gas		g/m	20	20	20	20
Operating range [3]	Cooling (Min / Max)	°C	- 10 / 43	- 10 / 43	- 10 / 43	- 10 / 43
	Heating (Min / Max)	°C	- 10 / 24	- 10 / 24	- 10 / 24	- 10 / 24

GLOBAL REMARKS	Rating conditions	Cooling	Heating
	Inside air temperature	27°C DB / 19°C WB	20°C DB
	Outside air temperature	35°C DB / 24°C WB	7°C DB / 6°C WB

DB: Dry bulb, WB: Wet bulb

1) EER and COP, Energy Saving Classification, is at 220 - 240V (380 - 415V) only in accordance with EU directive 2002/31/EC.
2) The annual consumption is calculated by multiplying the input power at 220 - 240V (380 - 415V) by an average of 500-hr per year in cooling mode.
3) The sound pressure Level of the units shows the value measured of a position 1 meter in front of the main body and 1,5 from the ground. The sound pressure is measured in accordance with Eurovent 6/C/006-97 specification.
4) 70mm for piping port.
5) When installing the outdoor unit at a higher position than the indoor unit.

KIT-E10-HB4EA // KIT-E15-HB4EA // KIT-E18-HB4EA // KIT-E21-JB4EA

HEALTHY AIR
- CZ-SA13P Alleru-buster antiallergic filter (optional)
- Odour-removing function

ENERGY EFFICIENCY AND ECOLOGY
- Maximum efficiency Inverter system

COMFORT
- Super Quiet mode
- Powerful mode
- Automatic vertical airflow control ambient temperature
- Hot start mode
- 24 hour On/Off timer
- Automatic restart after power cut

EASE OF USE
- Ergonomic infrared remote control

EASY INSTALLATION AND MAINTENANCE
- Removable, washable panel of the indoor unit
- Top panel maintenance access for the outdoor unit

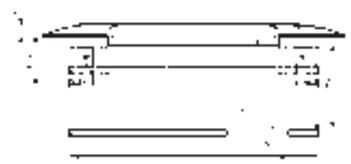

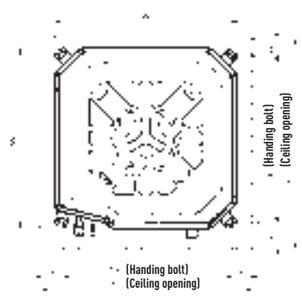

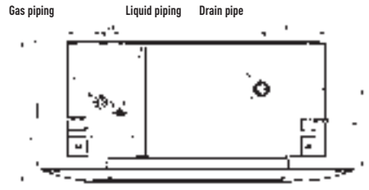

TECHNICAL ZOOM

- HIGHER ENERGY CLASS FOR HIGH SAVINGS, EVEN AT -20°C
- ECO MODE FOR 20% ENERGY SAVING
- WEEKLY TIMER, 42 SETTINGS PER WEEK
- 3 OPENING ANGLES FOR THE PRE-PROGRAMMED GRILLES
- 30 M MAXIMUM ELEVATION DIFFERENCE
- EASY CHECK MODE FOR FAILURE DETECTION

4-WAY 90X90 CASSETTE // INVERTER + FS TYPE

A complete line up of compact, efficient , quieter and powerful cassette 90x90, for the most demanding customers, from 2.5 H.P. to 6.0 H.P., Single-phase and three-phase

A class energy saving INVERTER+

prevention allergy filter ALLERU-BUSTER

OPTIONAL

down to -20°C in heating mode OUTDOOR TEMPERATURE

down to -15°C in cooling mode OUTDOOR TEMPERATURE

CZ-RL513B

CZ-RD513C

			2.5 H.P.	3.0 H.P.	4.0 H.P.	4.0 H.P.	5.0 H.P.	5.0 H.P.	6.0 H.P.
KIT			KIT-F24DB4E5	KIT-F28DB4E5	KIT-F34DB4E5	KIT-F34DB4E8	KIT-F43DB4E5	KIT-F43DB4E8	KIT-F50DB4E8
Indoor			CS-F24DB4E5	CS-F28DB4E5	CS-F34DB4E5	CS-F34DB4E5	CS-F43DB4E5	CS-F43DB4E5	CS-F50DB4E5
Outdoor			CU-L24DBE5	CU-L28DBE5	CU-L34DBE5	CU-L34DBE8	CU-L43DBE5	CU-L43DBE8	CU-L50DBE8
Panel			CZ-BT03P	CZ-BT03P	CZ-BT03P	CZ-BT03P	CZ-BT03P	CZ-BT03P	CZ-BT03P
Wireless control	Included with kit		CZ-RL513B	CZ-RL513B	CZ-RL513B	CZ-RL513B	CZ-RL513B	CZ-RL513B	CZ-RL513B
Wired remote control	Optional		CZ-RD513C	CZ-RD513C	CZ-RD513C	CZ-RD513C	CZ-RD513C	CZ-RD513C	CZ-RD513C
Cooling capacity	Nominal (Min-Max)	kW	6.30 (2.10-7.10)	7.10 (2.20-8.00)	10.00 (4.00-12.00)	10.00 (4.00-12.00)	12.50 (4.00-14.00)	12.50 (4.00-14.00)	14.00 (4.00-16.00)
	Nominal (Min-Max)	kCal/h	5,418 (1,806-6,106)	6,106 (1,892-6,880)	8,600 (3,440-10,320)	8,600 (3,440-10,320)	10,750 (3,440-12,040)	10,750 (3,440-12,040)	12,040 (3,440-13,760)
EER [1]	Nominal (Min-Max)		3.71 (4.20-3.23) A	3.55 (3.67-3.34) A	3.86 (3.48-3.75) A	3.86 (3.48-3.75) A	3.43 (3.34-3.69) A	3.43 (3.34-3.69) A	3.01 (3.34-3.23) B
Power input Cooling	Nominal (Min-Max)	kW	1.70 (0.50-2.20)	2.00 (0.60-2.40)	2.59 (1.15-3.20)	2.59 (1.15-3.20)	3.64 (1.20-3.80)	3.64 (1.20-3.80)	4.65 (1.20-4.95)
Heating capacity	Nominal (Min-Max)	kW	7.10 (2.20-8.00)	8.00 (2.30-8.50)	11.20 (4.00-14.00)	11.20 (4.00-14.00)	14.00 (4.00-16.00)	14.00 (4.00-16.00)	16.00 (4.00-18.00)
	Nominal (Min-Max)	kCal/h	6,106 (1,892-6,880)	6,880 (1,978-7,310)	9.632 (3,440-12,040)	9.632 (3,440-12,040)	12,040 (3,440-13,760)	12,040 (3,440-13,760)	13,760 (3,440-15,480)
COP [1]	Nominal (Min-Max)		3.86 (4.40-2.58) A	3.79 (3.83-2.65) A	3.86 (3.64-3.41) A	3.86 (3.64-3.41) A	3.61 (3.48-3.27) A	3.61 (3.48-3.27) A	3.41 (3.48-3.05) B
Power input Heating	Nominal (Min-Max)	kW	1.84 (0.50-3.10)	2.11 (0.60-3.20)	2.90 (1.10-4.10)	2.90 (1.10-4.10)	3.88 (1.15-4.90)	3.88 (1.15-4.90)	4.69 (1.15-5.90)
Annual Energy Consumption [2]		kWh	850	1000	1295	1295	1820	1820	2325
INDOOR UNIT									
Air Volume	Cooling / Heating	m3/h	1,080 / 1,080	1,200 / 1,200	1,620 / 1,620	1,620 / 1,620	1,860 / 1,860	1,860 / 1,860	1,920 / 1,920
Moisture removal volume		l/h	3.6	4.2	6.0	6.0	7.9	7.9	9.0
Sound pressure Level [3]	Cooling (Hi / Lo)	dB(A)	36 / 32	38 / 33	42 / 37	42 / 37	46 / 41	46 / 41	47 / 42
	Heating (Hi / Lo)	dB(A)	36 / 32	38 / 33	42 / 37	42 / 37	46 / 41	46 / 41	47 / 42
Sound power Level	Cooling (Hi)	dB	51	53	57	57	61	61	62
	Heating (Hi)	dB	51	53	57	57	61	61	62
Dimensions	Indoor (H x W x D)	mm	246 x 840 x 840	246 x 840 x 840	288 x 840 x 840	288 x 840 x 840	288 x 840 x 840	288 x 840 x 840	288 x 840 x 840
	Panel (H x W x D)	mm	45 x 950 x 950	45 x 950 x 950	45 x 950 x 950	45 x 950 x 950	45 x 950 x 950	45 x 950 x 950	45 x 950 x 950
Net weight	Indoor	Kg	26	26	28.5	28.5	28.5	28.5	28.5
	Panel	Kg	4.5	4.5	4.5	4.5	4.5	4.5	4.5
Dust filter			Yes	Yes	Yes	Yes	Yes	Yes	Yes
Antiallergic filter	Optional		CZ-SA11P	CZ-SA11P	CZ-SA11P	CZ-SA11P	CZ-SA11P	CZ-SA11P	CZ-SA11P
OUTDOOR UNIT									
Power source		V	220 - 240	220 - 240	220 - 240	380 - 415	220 - 240	380 - 415	380 - 415
Connection		mm^2	4 x 1'5 to 2'5	4 x 1'5 to 2'5	4 x 1'5 to 2'5	4 x 1'5 to 2'5	4 x 1'5 to 2'5	4 x 1'5 to 2'5	4 x 1'5 to 2'5
Current Cooling	Nominal (Min / Max)	A	7.7	9.2	11.7	4.1	16.5	5.8	7.1
Current Heating	Nominal (Min / Max)	A	8.4	9.6	13.2	4.6	17.6	6.1	7.2
Air Volume	Cooling / Heating	m3/h	2,880 / 2,880	2,880 / 2,880	5,880 / 5,880	5,880 / 5,880	5,880 / 5,880	5,880 / 5,880	5,880 / 5,880
Sound pressure Level [3]	Cooling (Hi)	dB(A)	47	48	52	52	53	53	54
	Heating (Hi)	dB(A)	49	50	54	54	55	55	56
Sound power Level	Cooling (Hi)	dB	63	64	66	66	67	67	68
	Heating (Hi)	dB	65	66	68	68	69	69	70
Dimensions	H x W x D	mm	795 x 900 x 320	795 x 900 x 320	1,340 x 900 x 320	1,340 x 900 x 320	1,340 x 900 x 320	1,340 x 900 x 320	1,340 x 900 x 320
Net weight		Kg	71	71	110	110	105	105	105
Piping connections	Liquid pipe	inch (mm)	3/8" (9.52)	3/8" (9.52)	3/8" (9.52)	3/8" (9.52)	3/8" (9.52)	3/8" (9.52)	3/8" (9.52)
	Gas pipe	inch (mm)	5/8" (15.88)	5/8" (15.88)	5/8" (15.88)	5/8" (15.88)	5/8" (15.88)	5/8" (15.88)	5/8" (15.88)
Refrigerant Loading	R410A	Kg	2.13	2.35	3.3	3.3	3.3	3.3	3.5
Elevation difference (in/out) [4]	Max	m	30	30	30	30	30	30	30
Piping length	Min - Max	m	7.5 - 50	7.5 - 50	7.5 - 50	7.5 - 50	7.5 - 50	7.5 - 50	7.5 - 50
Piping length without refrigerent increase	Max	m	30	30	30	30	30	30	30
Additional gas		g/m	50	50	50	50	50	50	50
Area control accessory			EKRORO wire	EKRORO wire	EKRORO wire	EKRORO wire	EKRORO wire	EKRORO wire	EKRORO wire
Operating range [3]	Cooling Min / Max	°C	-15 / 43	-15 / 43	-15 / 43	-15 / 43	-15 / 43	-15 / 43	-15 / 43
	Heating Min / Max	°C	-20 / 24	-20 / 24	-20 / 24	-20 / 24	-20 / 24	-20 / 24	-20 / 24

GLOBAL REMARKS	Rating conditions	Cooling	Heating
	Inside air temperature	27°C DB / 19°C WB	20°C DB
	Outside air temperature	35°C DB / 24°C WB	7°C DB / 6°C WB

DB: Dry bulb, WB: Wet bulb

1)EER and COP classification is at 220 - 240V in accordance with EU directive 2002/31/EC
2)The annual consumption is calculated by multiplying the input power at 220 - 240V by an avarage of 500-hr per year in cooling mode
3)The sound pressure Level of the units shows the value measured of a position 1 meter in front of the main body and 1,5 from the ground.
The sound pressure is measured in accordance with Eurovent 6/C/006-97 specification
4)When installing the outdoor unit at a higher position than the indoor unit

CU-L24DBE5
CU-L28DBE5

CU-L34DBE5 CU-L43DBE8
CU-L34DBE8 CU-L50DBE8
CU-L43DBE5

KIT-F24DB4E5 // KIT-F28DB4E5 // KIT-F34DB4E5 // KIT-F34DB4E8 // KIT-F43DB4E5 // KIT-F43DB4E8 // KIT-F50DB4E8

HEALTHY AIR
- CZ-SA11P Alleru-buster antiallergic filter (optional)

ENERGY EFFICIENCY AND ECOLOGY
- Maximum efficiency Inverter system
- R410A environmentally friendly refrigerant gas

COMFORT
- Cooling with low outdoor temperatures (down to -20 ºC)
- 3 types of air emission (3 opening angles for the pre-programmed grilles)
- Automatic deflectors
- Automatic start after a power cut
- Automatic fan operation mode

EASE OF USE
- Weekly On/Off timer (6 settings per day and 42 per week)
- Infrared remote control
- Optional wired remote control

EASY INSTALLATION AND MAINTENANCE
- Installation using existing pipes
- Drain pump (up to 750 mm)
- Self-diagnostic function
- Condensation control
- Removable, washable indoor unit panel

SPACE NEEDED FOR INSTALLATION

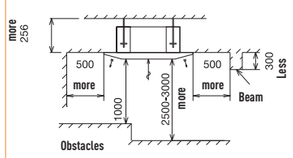

DRAINAGE

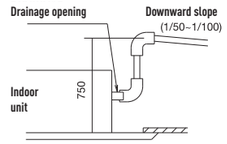

INDOOR UNIT DIMENSIONS // CS-F24DB4E5 // CS-F28DB4E5

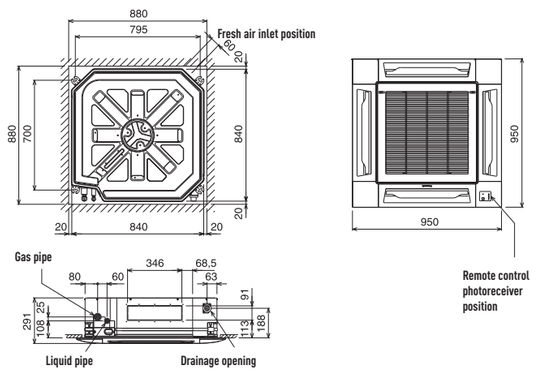

INDOOR UNIT DIMENSIONS // CS-F34DB4E5 // CS-F43DB4E5 // CS-F50DB4E5

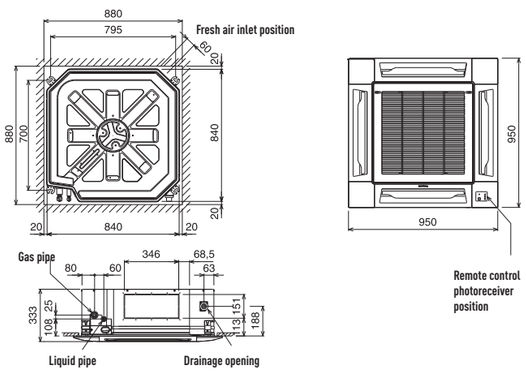

TECHNICAL ZOOM

- ULTRA COMPACT OUTDOOR UNITS (-40% REDUCED SIZE FOR THE CU-YL34HBE5)
- ECO MODE FOR 20% ENERGY SAVING
- WEEKLY TIMER, 42 SETTINGS PER WEEK
- 3 OPENING ANGLES FOR THE PRE-PROGRAMMED GRILLES
- 25 M MAXIMUM ELEVATION DIFFERENCE
- EASY CHECK MODE FOR FAILURE DETECTION

4-WAY 90X90 CASSETTE // INVERTER FS TYPE

Compact line up of inverter cassette, from 2.5 H.P. to 5.0 H.P., Single-phase

A class energy saving INVERTER

prevention allergy filter ALLERU-BUSTER

down to -20°C in heating mode OUTDOOR TEMPERATURE

down to -15°C in cooling mode OUTDOOR TEMPERATURE

OPTIONAL

CZ-RL513B

CZ-RD513C

			2.5 H.P.	3.0 H.P.	4.0 H.P.	5.0 H.P.
KIT			KIT-YH24DB4E5	KIT-YH28DB4E5	KIT-YH34DB4E5	KIT-YH43DB4E5
Indoor			CS-F24DB4E5	CS-F28DB4E5	CS-F34DB4E5	CS-F43DB4E5
Outdoor			CU-YL24HBE5	CU-YL28HBE5	CU-YL34HBE5	CU-YL43HBE5
Panel			CZ-BT03P	CZ-BT03P	CZ-BT03P	CZ-BT03P
Wireless control	Included with kit		CZ-RL513C	CZ-RL513C	CZ-RL513C	CZ-RL513C
Wired remote control	Optional		CZ-RL513B	CZ-RL513B	CZ-RL513B	CZ-RL513B
Cooling capacity	Nominal (Min - Max)	kW	5.60 (2 - 6.30)	7.10 (2.10 - 7.70)	10.00 (3.8 - 11.00)	12.50 (3.80 - 13.00)
	Nominal (Min - Max)	kCal/h	4,816 (1,720 - 5,418)	6,106 (1,806 - 6,622)	8,600 (3,268 - 9,460)	10,750 (3,268 - 11,180)
EER [1]	Nominal (Min - Max)		3.01 (3.64 - 2.86) B	3.01 (3.23 - 2.96) B	3.01 (3.04 - 2.78) B	3.01 (3.04 - 2.92) B
Power input Cooling	Nominal (Min - Max)	kW	1.86 (0.55 - 2.20)	2.36 (0.65 - 2.60)	3.32 (1.25 - 3.95)	4.15 (1.25 - 4.45)
Heating capacity	Nominal (Min - Max)	kW	7.00 (2.10 - 7.60)	8.00 (2.20 - 8.30)	11.20 (3.80 - 13.00)	14.00 (3.80 - 15.00)
	Nominal (Min - Max)	kCal/h	6,020 (1,806 - 6,536)	6,880 (1,892 - 7,138)	9,632 (3,268 - 11,180)	12,040 (3,268 - 12,900)
COP [1]	Nominal (Min - Max)		3.41 (4.20 - 2.71) B	3.42 (3.67 - 2.59) B	3.41 (3.45 - 3.17) B	3.41 (3.45 - 3.06) B
Power input Heating	Nominal (Min - Max)	kW	2.05 (0.50 - 2.80)	2.34 (0.60 - 3.20)	3.28 (1.10 - 4.10)	4.15 (1.10 - 4.90)
Annual Energy Consumption [2]		kWh	930	1180	1660	2075
INDOOR UNIT						
Air Volume	Cooling / Heating	m^3/h	1,080 / 1,080	1,200 / 1,200	1,620 / 1,620	1,860 / 1,860
Moisture removal volume		l/h	3.6	4.2	6.0	7.9
Sound pressure Level [3]	Cooling (Hi / Lo)	dB(A)	36 / 32	38 / 33	42 / 37	46 / 41
	Heating (Hi / Lo)	dB(A)	36 / 32	38 / 33	42 / 37	46 / 41
Sound power Level	Cooling (Hi)	dB	51	53	57	61
	Heating (Hi)	dB	51	53	57	61
Dimensions	Indoor (H x W x D)	mm	246 x 840 x 840	246 x 840 x 840	288 x 840 x 840	288 x 840 x 840
	Panel (H x W x D)	mm	950 x 950 x 45	950 x 950 x 45	950 x 950 x 45	950 x 950 x 45
Net weight	Indoor	Kg	26	26	28.5	28.5
	Panel	Kg	4.5	4.5	4.5	4.5
Dust filter			Yes	Yes	Yes	Yes
Antiallergic filter	Optional		CZ-SA11P	CZ-SA11P	CZ-SA11P	CZ-SA11P
OUTDOOR UNIT						
Power source		V	220 - 240	220 - 240	220 - 240	220 - 240
Connection		mm^2	4 x 1.5 to 2.5	4 x 1.5 to 2.5	4 x 1.5 to 2.5	4 x 1.5 to 2.5
Current Cooling	Nominal (Min / Max)	A	8.30	10.60	15.20	19.00
Current Heating	Nominal (Min / Max)	A	9.20	10.50	15.00	18.80
Air Volume	Cooling / Heating	m^3/h	3,180	3,480	3720	5,640
Sound pressure Level [3]	Cooling (Hi)	dB(A)	49	50	54	55
	Heating (Hi)	dB(A)	51	52	56	56
Sound power Level	Cooling (Hi)	dB	67	68	71	72
	Heating (Hi)	dB	68	69	73	73
Dimensions	H x W x D	mm	795 x 875+70 [4] x 320	795x 875+70 [4] x 320	795 x 900 x 320	1,170 x 900 x 320
Net weight		Kg	1/4" (6.35)	65	66	94
Piping connections	Liquid pipe	inch (mm)	3/8" (9.52)	3/8" (9.52)	3/8" (9.52)	3/8" (9.52)
	Gas pipe	inch (mm)	5/8" (15.88)	5/8" (15.88)	5/8" (15.88)	5/8" (15.88)
Refrigerant Loading	R410A	Kg	1,63	2.05	2.8	2.8
Elevation difference (in/out) [5]	Max	m	25	25	30	30
Piping length	Min - Max	m	7.5 - 30	7.5 - 30	7.5 - 50	7.5 - 50
Piping length without refrigerent increase	Max	m	30	30	30	30
Additional gas		g/m	50	50	50	50
Area control accessory			EKRORO wire	EKRORO wire	EKRORO wire	EKRORO wire
Operating range [3]	Cooling Min / Max	°C	-5 / 43	-5 / 44	-5 / 45	-5 / 46
	Heating Min / Max	°C	-15 / 24	-15 / 25	-15 / 26	-15 / 27

GLOBAL REMARKS	Rating conditions	Cooling	Heating
	Inside air temperature	27°C DB / 19°C WB	20°C DB
	Outside air temperature	35°C DB / 24°C WB	7°C DB / 6°C WB

DB: Dry bulb, WB: Wet bulb

1) EER and COP, Energy Saving Classification, is at 220 - 240V (380 - 415V) only in accordance with EU directive 2002/31/EC.
2) The annual consumption is calculated by multiplying the input power at 220 - 240V (380 - 415V) by an average of 500-hr per year in cooling mode.
3) The sound pressure Level of the units shows the value measured of a position 1 meter in front of the main body and 1,5 from the ground. The sound pressure is measured in accordance with Eurovent 6/C/006-97 specification.
4) Add 70mm for piping port.
5) When installing the outdoor unit at a higher position than the indoor unit.

CU-YL24HBE5
CU-YL28HBE5

CU-YL34HBE5

CU-YL43HBE5

KIT-YH24DB4E5 // KIT-YH28DB4E5 // KIT-YH34DB4E5 // KIT-YH43DB4E5

HEALTHY AIR
- CZ-SA11P Alleru-buster antiallergic filter (optional)

ENERGY EFFICIENCY AND ECOLOGY
- Inverter system
- R410A environmentally friendly refrigerant gas

COMFORT
- Cooling with low outdoor temperatures (down to -15 ºC)
- 3 types of air emission (3 opening angles for the pre-programmed grilles)
- Automatic deflectors
- Automatic start after a power cut
- Automatic fan operation mode

EASE OF USE
- Weekly On/Off timer (6 settings per day and 42 per week)
- Infrared remote control
- Optional wired remote control

EASY INSTALLATION AND MAINTENANCE
- Installation using existing pipes (only for YL*HBE5 units)
- Drain pump (up to 750 mm)
- Self-diagnostic function
- Condensation control
- Removable, washable indoor unit panel

SPACE NEEDED FOR INSTALLATION

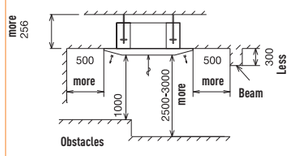

DRAINAGE

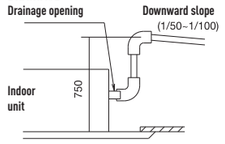

INDOOR UNIT DIMENSIONS // CS-F24DB4E5 // CS-F28DB4E5

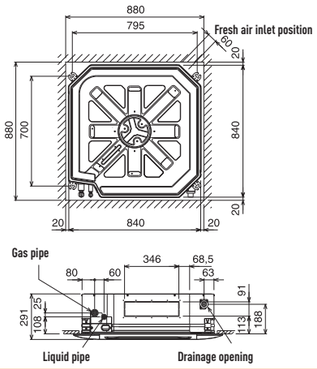

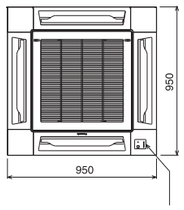

INDOOR UNIT DIMENSIONS // CS-F34DB4E5 // CS-F43DB4E5

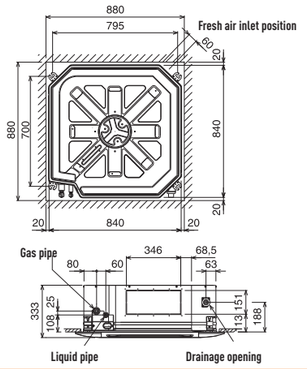

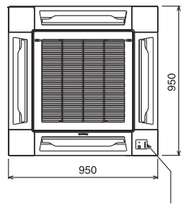

TECHNICAL ZOOM

- ECO MODE FOR 20% ENERGY SAVING
- 3 OPENING ANGLES FOR THE PRE-PROGRAMMED GRILLES
- WEEKLY TIMER, 42 SETTINGS PER WEEK
- 30 M MAXIMUM ELEVATION DIFFERENCE
- EASY CHECK MODE FOR FAILURE DETECTION

4-WAY 90X90 CASSETTE // HEAT PUMP FS TYPE

Full line up of heat pump non-inverter cassette, from 1.5 H.P. to 6.0 H.P., Single-phase and three-phase

prevention allergy filter — ALLERU-BUSTER
down to -10°C in cooling mode — OUTDOOR TEMPERATURE
down to -10°C in heating mode — OUTDOOR TEMPERATURE

OPTIONAL

CZ-RL513B

CZ-RD513C

			1.5 H.P.	2.0 H.P.	2.5 H.P.	3.0 H.P.	3.0 H.P.	4.0 H.P.	4.0 H.P.	5.0 H.P.	6.0 H.P.
KIT			KIT-F14DB4E5-C	KIT-F18DB4E5-C	KIT-F24DB4E5-C	KIT-F28DB4E5-C	KIT-F28DB4E8-C	KIT-F34DB4E5-C	KIT-F34DB4E8-C	KIT-F43DB4E8-C	KIT-F50DB4E8-C
Indoor			CS-F14DB4E5	CS-F18DB4E5	CS-F24DB4E5	CS-F28DB4E5	CS-F28DB4E5	CS-F34DB4E5	CS-F34DB4E5	CS-F43DB4E5	CS-F50DB4E5
Outdoor			CU-B14DBE5	CU-B18DBE5	CU-B24DBE5	CU-B28DBE5	CU-B28DBE8	CU-B34DBE5	CU-B34DBE8	CU-B43DBE8	CU-B50DBE8
Panel			CZ-BT03P	CZ-BT03P	CZ-BT03P	CZ-BT03P	CZ-BT03P	CZ-BT03P	CZ-BT03P	CZ-BT03P	CZ-BT03P
Wireless control	Included with kit		CZ-RL513B	CZ-RL513B	CZ-RL513B	CZ-RL513B	CZ-RL513B	CZ-RL513B	CZ-RL513B	CZ-RL513B	CZ-RL513B
Wired remote control	Optional		CZ-RD513C	CZ-RD513C	CZ-RD513C	CZ-RD513C	CZ-RD513C	CZ-RD513C	CZ-RD513C	CZ-RD513C	CZ-RD513C
Cooling capacity	Nominal (Min-Max)	kW	3.80	5.00	6.60	7.3	7.3	10	10	12.5	13.5
	Nominal (Min-Max)	kCal/h	3268	4300	5676	6278	6278	8600	8600	10750	11610
EER [1]	Nominal (Min-Max)		3.09 B	2.91 C	2.63 D	2.61 D	2.61 D	2.62 D	2.72 D	2.69 D	2.67 D
Power input Cooling	Nominal (Min-Max)	kW	1.23 (1.2-1.6)	1.72 (1.69-1.75)	2.51(2.46-2.57)	2.80 (2.74-2.85)	2.80 (2.74-2.85)	3.81 (3.76-3.86)	3.68 (3.63-3.73)	4.65 (4.6-4.7)	5.06 (5.01-5.15)
Heating capacity	Nominal (Min-Max)	kW	4.30	5.60	7.1	8.0	8.0	11.2	11.2	14.0	15.0
	Nominal (Min-Max)	kCal/h	3698	4816	6106	6880	6880	9632	9632	12040	12900
COP [1]	Nominal (Min-Max)		3.52 B	3.46 B	3.01 D	3.08 D	3.08 D	2.90 D	2.96 D	3.05 D	3.04 D
Power input Heating	Nominal (Min-Max)	kW	1.22 (1.19-1.25)	1.62 (1.59-1.65)	2.36 (2.31-2.41)	2.60 (2.55-2.65)	2.60 (2.55-2.65)	3.86 (3.81-3.91)	3.78 (3.73-3.83)	4.59 (4.54-4.64)	4.93 (4.88-4.98)
Annual Energy Consumption [2]		kWh	615	860	1255	1400	1400	1905	1840	2325	2530
INDOOR UNIT											
Air Volume	Cooling / Heating	m^3/h	900 / 900	960 / 960	1,080 / 1,080	1,200 / 1,200	1,200 / 1,200	1,620 / 1,620	1,620 / 1,620	1,860 / 1,860	1,920 / 1,920
Moisture removal volume		l/h	2.2	2.8	3.8	4.3	4.3	6.0	6.0	7.9	8.6
Sound pressure Level [3]	Cooling (Hi / Lo)	dB(A)	34 / 31	35 / 32	36 / 32	38 / 33	38 / 33	42 / 37	42 / 37	46 / 41	47 / 42
	Heating (Hi / Lo)	dB(A)	34 / 31	34 / 31	36 / 32	38 / 33	38 / 33	42 / 37	42 / 37	46 / 41	47 / 42
Sound power Level	Cooling (Hi)	dB	49	50	51	53	53	57	57	61	62
	Heating (Hi)	dB	49	49	51	53	53	57	57	61	62
Dimensions	Indoor (H x W x D)	mm	246x840x840	246x840x840	246x840x840	246x840x840	246x840x840	288x840x840	288x840x840	288x840x840	288x840x840
	Panel (H x W x D)	mm	45x950x950	45x950x950	45x950x950	45x950x950	45x950x950	45x950x950	45x950x950	45x950x950	45x950x950
Net weight	Indoor	Kg	25	26	26	26	26	28.5	28.5	28.5	28.5
	Panel	Kg	4.5	4.5	4.5	4.5	4.5	4.5	4.5	4.5	4.5
Dust filter			Yes	Yes	Yes	Yes	Yes	Yes	Yes	Yes	Yes
Antiallergic filter	Optional		CZ-SA11P	CZ-SA11P	CZ-SA11P	CZ-SA11P	CZ-SA11P	CZ-SA11P	CZ-SA11P	CZ-SA11P	CZ-SA11P
OUTDOOR UNIT											
Power source		V	220 - 240	220 - 240	220 - 240	220 - 240	380 - 415	220 - 240	380 - 415	380 - 415	380 - 415
Connection		mm^2	4 x 1'5 to 2'5	4 x 1'5 to 2'5	4 x 1'5 to 2'5	4 x 1'5 to 2'5	4 x 1'5 to 2'5	4 x 1'5 to 2'5	4 x 1'5 to 2'5	4 x 1'5 to 2'5	4 x 1'5 to 2'5
Current Cooling	Nominal (Min / Max)	A	5.5	7.7	12.4	12.8	4.85	18.1	6.1	7.9	8.5
Current Heating	Nominal (Min / Max)	A	5.45	7.2	11.2	11.8	4.3	17.7	6.0	7.7	8.0
Air Volume	Cooling / Heating	m^3/h	3,240	3,420	3,600	3,780	3,780	5,640	5,640	5,640	5,760
Sound pressure Level [3]	Cooling (Hi)	dB(A)	49	49	50	52	52	55	55	56	56
	Heating (Hi)	dB(A)	50	50	51	53	53	56	56	57	57
Sound power Level	Cooling (Hi)	dB	65	65	66	67	67	69	69	70	70
	Heating (Hi)	dB	66	66	67	68	68	70	70	71	71
Dimensions	H x W x D	mm	795x900x320	795x900x320	795x900x320	795x900x320	795x900x320	1,170x900x320	1,170x900x320	1,170x900x320	1,170x900x320
Net weight		Kg	55	57	69	69	69	102	100	102	102
Piping connections	Liquid pipe	inch (mm)	1/4" (6.35)	1/4" (6.35)	3/8" (9.52)	3/8" (9.52)	3/8" (9.52)	3/8" (9.52)	3/8" (9.52)	3/8" (9.52)	3/8" (9.52)
	Gas pipe	inch (mm)	1/2" (12.70)	1/2" (12.70)	5/8" (15.88)	5/8" (15.88)	5/8" (15.88)	5/8" (15.88)	5/8" (15.88)	5/8" (15.88)	5/8" (15.88)
Refrigerant Loading	R410A	Kg	1.10	1.35	1.70	2.05	2.05	2.70	2.70	3.10	3.40
Elevation difference (in/out) [4]	Max	m	20	20	30	30	30	30	30	30	30
Piping length	Min - Max	m	7.5 - 30	7.5 - 30	7.5 - 50	7.5 - 50	7.5 - 50	7.5 - 50	7.5 - 50	7.5 - 50	7.5 - 50
Piping length without refrigerent increase	Max	m	20	20	30	30	30	30	30	30	30
Additional gas		g/m	50	50	50	50	50	50	50	50	50
Area control accessory			EKRORO wire	EKRORO wire	EKRORO wire	EKRORO wire	EKRORO wire	EKRORO wire	EKRORO wire	EKRORO wire	EKRORO wire
Operating range [3]	Cooling Min / Max	°C	-10 / 43	-10 / 43	-10 / 43	-10 / 43	-10 / 43	-10 / 43	-10 / 43	-10 / 43	-10 / 43
	Heating Min / Max	°C	-10 / 24	-10 / 24	-10 / 24	-10 / 24	-10 / 24	-10 / 24	-10 / 24	-10 / 24	-10 / 24

GLOBAL REMARKS	Rating conditions	Cooling	Heating
	Inside air temperature	27°C DB / 19°C WB	20°C DB
	Outside air temperature	35°C DB / 24°C WB	7°C DB / 6°C WB

DB: Dry bulb, WB: Wet bulb

1)EER and COP classification is at 220 - 240V in accordance with EU directive 2002/31/EC.
2)The annual consumption is calculated by multiplying the input power at 220 - 240V by an avarage of 500-hr per year in cooling mode.
3)The sound pressure Level of the units shows the value measured of a position 1 meter in front of the main body and 1,5 from the ground.
The sound pressure is measured in accordance with Eurovent 6/C/006-97 specification.
4)When installing the outdoor unit at a higher position than the indoor unit.

CU-B14DBE5 CU-B18DBE5 CU-B24DBE5 CU-B28DBE5 CU-B28DBE8

CU-B34DBE5 CU-B34DBE8 CU-B43DBE8 CU-B50DBE8

KIT-F14DB4E5-C // KIT-F18DB4E5-C // KIT-F24DB4E5-C // KIT-F28DB4E5-C // KIT-F28DB4E8-C // KIT-F34DB4E5-C // KIT-F34DB4E8-C // KIT-F43DB4E8-C // KIT-F50DB4E8-C

HEALTHY AIR
- CZ-SA11P Alleru-buster antiallergic filter (optional)

ENERGY EFFICIENCY AND ECOLOGY
- R410A environmentally friendly refrigerant gas

COMFORT
- 3 types of air emission (3 opening angles for the pre-programmed grilles)
- Automatic deflectors
- Automatic start after a power cut
- Automatic fan operation mode

EASE OF USE
- Weekly On/Off timer (6 settings per day and 42 per week)
- Infrared remote control
- Optional wired remote control

EASY INSTALLATION AND MAINTENANCE
- Self-diagnostic function
- Drain pump (up to 750 mm)
- Condensation control
- Removable, washable indoor unit panel

SPACE NEEDED FOR INSTALLATION

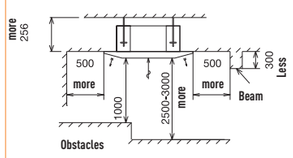

DRAINAGE

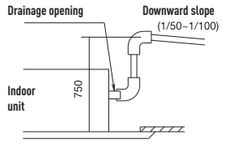

INDOOR UNIT DIMENSIONS // CS-F14DB4E5 // CS-F18DB4E5 // CS-F24DB4E5 // CS-F28DB4E5

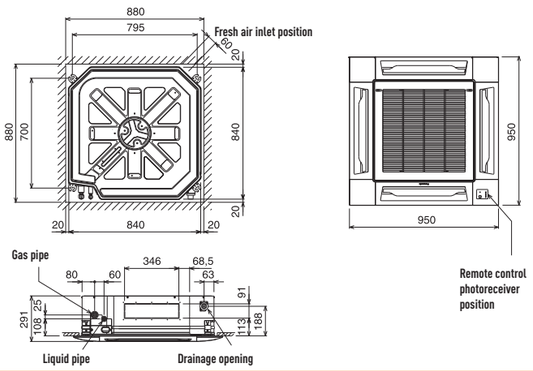

INDOOR UNIT DIMENSIONS // CS-F34DB4E5 // CS-F43DB4E5 // CS-F50DB4E5

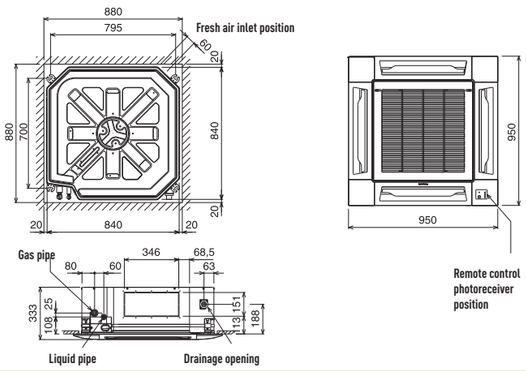

TECHNICAL ZOOM

- ECO MODE FOR 20% ENERGY SAVING
- 3 OPENING ANGLES FOR THE PRE-PROGRAMMED GRILLES
- WEEKLY TIMER, 42 SETTINGS PER WEEK
- 30 M MAXIMUM ELEVATION DIFFERENCE
- EASY CHECK MODE FOR FAILURE DETECTION

4-WAY 90X90 CASSETTE // COOLING ONLY FS TYPE

Full line up of cooling only non-inverter cassette, from 1.5 H.P. to 6.0 H.P., Single-phase and three-phase

prevention allergy filter — ALLERU-BUSTER

down to -10°C in cooling mode — OUTDOOR TEMPERATURE

OPTIONAL

CZ-RL513B

CZ-RD513C

			1.5 H.P	2.0 H.P.	2.5 H.P.	2.5 H.P.	3.0 H.P.	3.0 H.P.	4.0 H.P.	4.0 H.P.	5.0 H.P.	6.0 H.P.
KIT			KIT-F14DB4E5-F	KIT-F18DB4E5-F	KIT-F24DB4E5-F	KIT-F24DB4E8-F	KIT-F28DB4E5-F	KIT-F28DB4E8-F	KIT-F34DB4E5-F	KIT-F34DB4E8-F	KIT-F43DB4E8-F	KIT-F50DB4E8-F
Indoor			CS-F14DB4E5	CS-F18DB4E5	CS-F24DB4E5	CS-F24DB4E5	CS-F28DB4E5	CS-F28DB4E5	CS-F34DB4E5	CS-F34DB4E5	CS-F43DB4E5	CS-F50DB4E5
Outdoor			CU-J14DBE5	CU-J18DBE5	CU-J24DBE5	CU-J24DBE8	CU-J28DBE5	CU-J28DBE8	CU-J34DBE5	CU-J34DBE8	CU-J43DBE8	CU-J50DBE8
Panel			CZ-BT03P	CZ-BT03P	CZ-BT03P	CZ-BT03P	CZ-BT03P	CZ-BT03P	CZ-BT03P	CZ-BT03P	CZ-BT03P	CZ-BT03P
Wireless control	Included with kit		CZ-RL513B	CZ-RL513B	CZ-RL513B	CZ-RL513B	CZ-RL513B	CZ-RL513B	CZ-RL513B	CZ-RL513B	CZ-RL513B	CZ-RL513B
Wired remote control	Optional		CZ-RD513C	CZ-RD513C	CZ-RD513C	CZ-RD513C	CZ-RD513C	CZ-RD513C	CZ-RD513C	CZ-RD513C	CZ-RD513C	CZ-RD513C
Cooling capacity	Nominal (Min-Max)	kW	3.80	5.00	6.60	6.60	7.3	7.3	10	10	12.5	13.5
	Nominal (Min-Max)	kCal/h	3,268	4,300	5,676	5,676	6,278	6,278	8,600	8,600	10,750	11,610
EER [1]	Nominal (Min-Max)		3.02 B	2.91 C	2.58 E	2.56 E	2.61 D	2.61 D	2.54 E	2.63 D	2.61 D	2.61 D
Power input Cooling	Nominal (Min-Max)	kW	1.26 (1.2-1.29)	1.72 (1.69-1.75)	2.58(2.53-2.63)	2.58(2.53-2.63)	2.80 (2.74-2.85)	2.80 (2.74-2.85)	3.93 (3.88-3.98)	3.80 (3.63-3.85)	4.79 (4.74-4.84)	5.18 (5.13-5.23)
Annual Energy Consumption [2]		kWh	630	860	1,290	1,290	1,400	1,400	1,965	1,900	2,395	2,590
INDOOR UNIT												
Air Volume		m3/h	900	960	1,080	1,080	1,200	1,200	1,620	1,620	1,860	1,920
Moisture removal volume		l/h	2.2	2.8	3.8	3.8	4.3	4.3	6.0	6.0	7.9	8.6
Sound pressure Level [3]	Hi / Lo	dB(A)	34 / 31	35 / 32	36 / 32	36 / 32	38 / 33	38 / 33	42 / 37	42 / 37	46 / 41	47 / 42
Sound power Level	Hi	dB	49	50	51	51	53	53	57	57	61	62
Dimensions	Indoor (H x W x D)	mm	246x840x840	246x840x840	246x840x840	246x840x840	246x840x840	246x840x840	288x840x840	288x840x840	288x840x840	288x840x840
	Panel (H x W x D)	mm	45x950x950	45x950x950	45x950x950	45x950x950	45x950x950	45x950x950	45x950x950	45x950x950	45x950x950	45x950x950
Net weight	Indoor	Kg	25	26	26	26	26	26	28.5	28.5	28.5	28.5
	Panel	Kg	4.5	4.5	4.5	4.5	4.5	4.5	4.5	4.5	4.5	4.5
Dust filter			Yes	Yes	Yes	Yes	Yes	Yes	Yes	Yes	Yes	Yes
Antiallergic filter	Optional		CZ-SA11P	CZ-SA11P	CZ-SA11P	CZ-SA11P	CZ-SA11P	CZ-SA11P	CZ-SA11P	CZ-SA11P	CZ-SA11P	CZ-SA11P
OUTDOOR UNIT												
Power source		V	220 - 240	220 - 240	220 - 240	380 - 415	220 - 240	380 - 415	220 - 240	380 - 415	380 - 415	380 - 415
Connection		mm²	4 x 1'5 to 2'5	4 x 1'5 to 2'5	4 x 1'5 to 2'5	4 x 1'5 to 2'5	4 x 1'5 to 2'5	4 x 1'5 to 2'5	4 x 1'5 to 2'5	4 x 1'5 to 2'5	4 x 1'5 to 2'5	4 x 1'5 to 2'5
Current Cooling	Nominal (Min / Max)	A	5.7	7.7	13.2	4.55	12.9	4.9	18.1	6.2	8	8.5
Air Volume		m3/h	3,240	3,420	3,600	3,600	3,780	3,780	5,640	5,640	5,640	5,760
Sound pressure Level [3]	Hi	dB(A)	49	49	50	50	52	52	55	55	56	56
Sound power Level	Hi	dB	65	65	66	66	67	67	69	69	70	70
Dimensions	H x W x D	mm	795x900x320	795x900x320	795x900x320	795x900x320	795x900x320	795x900x320	1,170x900x320	1,170x900x320	1,170x900x320	1,170x900x320
Net weight		Kg	55	57	69	69	69	69	102	100	102	102
Piping connections	Liquid pipe	inch (mm)	1/4" (6.35)	1/4" (6.35)	3/8" (9.52)	3/8" (9.52)	3/8" (9.52)	3/8" (9.52)	3/8" (9.52)	3/8" (9.52)	3/8" (9.52)	3/8" (9.52)
	Gas pipe	inch (mm)	1/2" (12.70)	1/2" (12.70)	5/8" (15.88)	5/8" (15.88)	5/8" (15.88)	5/8" (15.88)	5/8" (15.88)	5/8" (15.88)	5/8" (15.88)	5/8" (15.88)
Refrigerant Loading	R410A	Kg	1.1	1.35	1.7	1.7	2.05	2.05	2.7	2.7	3.1	3.4
Elevation difference (in/out) [4]	Max	m	20	20	30	30	30	30	30	30	30	30
Piping length	Min - Max	m	7.5 - 30	7.5 - 30	7.5 - 50	7.5 - 50	7.5 - 50	7.5 - 50	7.5 - 50	7.5 - 50	7.5 - 50	7.5 - 50
Piping length without refrigerent increase	Max	m	20	20	30	30	30	30	30	30	30	30
Additional gas		g/m	50	50	50	50	50	50	50	50	50	50
Area control accessory			EKRORO wire	EKRORO wire	EKRORO wire	EKRORO wire	EKRORO wire	EKRORO wire	EKRORO wire	EKRORO wire	EKRORO wire	EKRORO wire
Operating range [3]	Min / Max	°C	-10 / 43	-10 / 43	-10 / 43	-10 / 43	-10 / 43	-10 / 43	-10 / 43	-10 / 43	-10 / 43	-10 / 43

GLOBAL REMARKS	Rating conditions	Cooling
	Inside air temperature	27°C DB / 19°C WB
	Outside air temperature	35°C DB / 24°C WB

DB: Dry bulb, WB: Wet bulb

1) EER, Energy Saving Classification, is at 220 - 240V (380 - 415V) only in accordance with EU directive 2002/31/EC.
2) The annual consumption is calculated by multiplying the input power at 220 - 240V (380 - 415V) by an average of 500-hr per year in cooling mode.
3) The sound pressure Level of the units shows the value measured of a position 1 meter in front of the main body and 1,5 from the ground. The sound pressure is measured in accordance with Eurovent 6/C/006-97 specification.
4) When installing the outdoor unit at a higher position than the indoor unit.

CU-J14DBE5 CU-J24DBE8
CU-J18DBE5 CU-J28DBE5
CU-J24DBE5 CU-J28DBE8

CU-J34DBE5 CU-J43DBE8
CU-J34DBE8 CU-J50DBE8

KIT-F14DB4E5-F // KIT-F18DB4E5-F // KIT-F24DB4E5-F // KIT-F24DB4E8-F // KIT-F28DB4E5-F // KIT-F28DB4E8-F // KIT-F34DB4E5-F // KIT-F34DB4E8-F // KIT-F43DB4E8-F // KIT-F50DB4E8-F

HEALTHY AIR
- CZ-SA11P Alleru-buster antiallergic filter (optional)

ENERGY EFFICIENCY AND ECOLOGY
- R410A environmentally friendly refrigerant gas

COMFORT
- 3 types of air emission (3 opening angles for the pre-programmed grilles)
- Automatic deflectors
- Automatic start after a power cut
- Automatic fan operation mode

EASE OF USE
- Weekly On/Off timer (6 settings per day and 42 per week)
- Infrared remote control
- Optional wired remote control

EASY INSTALLATION AND MAINTENANCE
- Self-diagnostic function
- Drain pump (up to 750 mm)
- Condensation control
- Removable, washable indoor unit panel

SPACE NEEDED FOR INSTALLATION

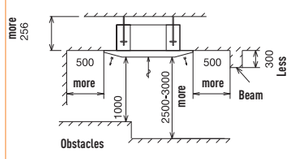

DRAINAGE

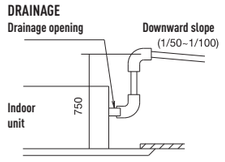

INDOOR UNIT DIMENSIONS // CS-F14DB4E5 // CS-F18DB4E5 // CS-F24DB4E5 // CS-F28DB4E5

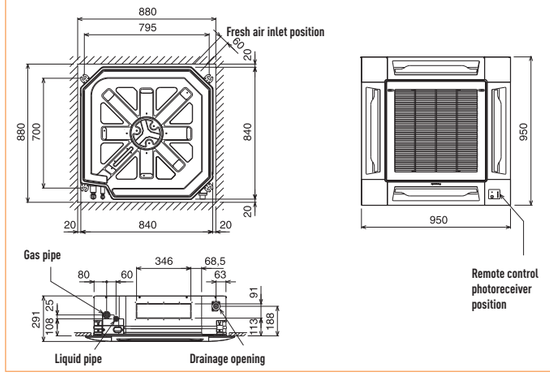

INDOOR UNIT DIMENSIONS // CS-F34DB4E5 // CS-F43DB4E5 // CS-F50DB4E5

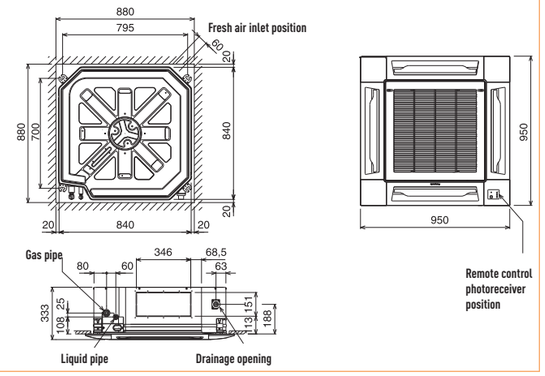

TECHNICAL ZOOM

- HIGHER ENERGY CLASS FOR HIGH SAVINGS, EVEN AT -20°C
- ECO MODE FOR 20% ENERGY SAVING
- EXTREMELY COMPACT INDOOR UNITS WITHOUT LOSING STATIC PRESSURE (ONLY 250MM HIGH)
- WEEKLY TIMER, 42 SETTINGS PER WEEK
- 30 M MAXIMUM ELEVATION DIFFERENCE
- EASY CHECK MODE FOR FAILURE DETECTION

LOW STATIC PRESSURE HIDE AWAY // INVERTER + FS TYPE

A complete line up of compact, efficient, quieter and powerful hide away, for the most demanding customers, from 2.5 H.P. to 6.0 H.P., Single-phase and three-phase

A class energy saving INVERTER+

down to -20°C in heating mode OUTDOOR TEMPERATURE

down to -15°C in cooling mode OUTDOOR TEMPERATURE

CZ-RD513C

			2.5 H.P.	3.0 H.P.	4.0 H.P.	4.0 H.P.	5.0 H.P.	5.0 H.P.	6.0 H.P.
KIT			KIT-F24DD3E5	KIT-F28DD3E5	KIT-F34DD3E5	KIT-F34DD3E8	KIT-F43DD3E5	KIT-F43DD3E8	KIT-F50DD3E8
Indoor			CS-F24DD3E5	CS-F28DD3E5	CS-F34DD3E5	CS-F34DD3E5	CS-F43DD3E5	CS-F43DD3E5	CS-F50DD3E5
Outdoor			CU-L24DBE5	CU-L28DBE5	CU-L34DBE5	CU-L34DBE8	CU-L43DBE5	CU-L43DBE8	CU-L50DBE8
Wired remote control			CZ-RD513C	CZ-RD513C	CZ-RD513C	CZ-RD513C	CZ-RD513C	CZ-RD513C	CZ-RD513C
Cooling capacity	Nominal (Min-Max)	kW	6.30 (2.00-6.50)	7.10 (2.10-7.50)	10.00 (4.00-12.00)	10.00 (4.00-12.00)	12.50 (4.00-13.50)	12.50 (4.00-13.50)	14.00 (4.00-16.00)
	Nominal (Min-Max)	kCal/h	5,418 (1,720-5,590)	6,106 (1,806-6,450)	8,600 (3,440-10,320)	8,600 (3,440-10,320)	10,750 (3,440-11,610)	10,750 (3,440-11,610)	12,040 (3,440-13,760)
EER [1]	Nominal (Min-Max)		3.21 (3.33-2.71) A	3.21 (3.23-3.06) A	3.61 (3.08-3.48) A	3.61 (3.08-3.48) A	3.01 (2.86-3.07) B	3.01 (2.86-3.07) B	2.81 (2.76-3.08) B
Power input Cooling	Nominal (Min-Max)	kW	1.96 (0.6-2.4)	2.21 (0.65-2.45)	2.77 (1.3-3.45)	2.77 (1.3-3.45)	4.15 (1.4-4.4)	4.15 (1.4-4.4)	4.98 (1.45-5.2)
Heating capacity	Nominal (Min-Max)	kW	7.10 (2.10-7.50)	8.00 (2.20-8.50)	11.20 (4.00-13.50)	11.20 (4.00-13.50)	14.00 (4.00-15.50)	14.00 (4.00-15.50)	16.00 (4.00-18.00)
	Nominal (Min-Max)	kCal/h	6,106 (1,806-6,450)	6,880 (1,892-7,310)	9,632 (3,440-11,610)	9,632 (3,440-11,610)	12,040 (3,440-13,330)	12,040 (3,440-13,330)	13,760 (3,440-15,480)
COP [1]	Nominal (Min-Max)		3.41 (3.50-2.38) B	3.42 (3.38-2.62) B	3.41 (3.08-3.18) B	3.41 (3.08-3.18) B	3.41 (2.86-3.04) B	3.41 (2.86-3.04) B	3.21 (2.86-2.95) C
Power input Heating	Nominal (Min-Max)	kW	2.08 (0.6-3.15)	2.34 (0.65-3.25)	3.28 (1.3-4.25)	3.28 (1.3-4.25)	4.11 (1.4-5.1)	4.11 (1.4-5.1)	4.98 (1.4-6.1)
Annual Energy Consumption [2]		kWh	980	1,105	1,385	1,385	2,075	2,075	2,490
INDOOR UNIT									
External static pressure [3]	High (Shigh)	mmAq	5.1 [7] (7.0 [8])	5.1 [7] (7.0 [8])	5.1 [7] (7.0 [8])	5.1 [7] (7.0 [8])	5.1 [7] (7.0 [8])	5.1 [7] (7.0 [8])	5.1 [7] (7.0 [8])
	Medium	mmAq	2.6	2.6	2.8	2.8	2.8	2.8	3
	Low	mmAq	1.8	1.8	2	2	2	2	2.5
Air Volume	High (Shigh)	m^3/h	1,320 [7] (1,200 [8])	1,320 [7] (1,200 [8])	2,160 [7] (2,010 [8])	2,160 [7] (2,010 [8])	2,400 [7] (2,190 [8])	2,400 [7] (2,190 [8])	2,640 [7] (2,430 [8])
	Medium	m^3/h	984	984	1,620	1,620	1,770	1,770	1,920
	Low	m^3/h	810	810	1,320	1,320	1,420	1,420	1,560
Moisture removal volume		l/h	2.3	2.8	3.8	4.3	6.0	7.9	9.0
Sound pressure Level [4]	Cooling (Hi / Lo)	dB(A)	43 / 39	43 / 39	47 / 43	45 / 41	45 / 41	45 / 41	46 / 42
	Heating (Hi / Lo)	dB(A)	43 / 39	43 / 39	45 / 41	44 / 40	44 / 40	44 / 40	45 / 41
Sound power Level	Cooling (Hi)	dB	59	59	60	60	60	60	61
	Heating (Hi)	dB	59	59	59	59	59	59	60
Dimension	Indoor (H x W x D)	mm	250x1,000+100[5]x650	250x1,000+100[5]x650	250x1,200+100[5]x650	250x1,200+100[5]x650	250x1,200+100[5]x650	250x1,200+100[5]x650	250x1,200+100[5]x650
Net weight	Indoor	Kg	41	41	47	47	47	47	47
Dust filter			Yes	Yes	Yes	Yes	Yes	Yes	Yes
OUTDOOR UNIT									
Power source		V	220 - 240	220 - 240	220 - 240	380 - 415	220 - 240	380 - 415	380 - 415
Connection		mm^2	4 x 1'5 to 2'5	4 x 1'5 to 2'5	4 x 1'5 to 2'5	4 x 1'5 to 2'5	4 x 1'5 to 2'5	4 x 1'5 to 2'5	4 x 1'5 to 2'5
Current Cooling	Nominal (Min / Max)	A	9.0	10.1	12.6	4.4	18.8	6.5	7.6
Current Heating	Nominal (Min / Max)	A	9.5	10.6	14.9	5.2	18.7	6.5	7.6
Air Volume	Cooling / Heating	m^3/h	2,880 / 2,880	2,880 / 2,880	5,880 / 5,880	5,880 / 5,880	5,880 / 5,880	5,880 / 5,880	5,880 / 5,880
Sound pressure Level [4]	Cooling (Hi)	dB(A)	47	48	52	52	53	53	54
	Heating (Hi)	dB(A)	49	50	54	54	55	55	56
Sound power Level	Cooling (Hi)	dB	63	64	66	66	67	67	68
	Heating (Hi)	dB	65	66	68	68	69	69	70
Dimensions	H x W x D	mm	795x900x320	795x900x320	1,340x900x320	1,340x900x320	1,340x900x320	1,340x900x320	1,340x900x320
Net weight		Kg	71	71	110	105	110	105	105
Piping connections	Liquid pipe	inch (mm)	3/8" (9.52)	3/8" (9.52)	3/8" (9.52)	3/8" (9.52)	3/8" (9.52)	3/8" (9.52)	3/8" (9.52)
	Gas pipe	inch (mm)	5/8" (15.88)	5/8" (15.88)	5/8" (15.88)	5/8" (15.88)	5/8" (15.88)	5/8" (15.88)	5/8" (15.88)
Refrigerant Loading	R410A	Kg	2.13	2.35	3.3	3.3	3.3	3.3	3.5
Elevation difference (in/out) [6]	Max	m	30	30	30	30	30	30	30
Piping length	Min - Max	m	7.5-50	7.5-50	7.5-50	7.5-50	7.5-50	7.5-50	7.5-50
Piping length without refrigerent increase	Max	m	30	30	30	30	30	30	30
Additional gas		g/m	50	50	50	50	50	50	50
Area control accessory			EKRORO wire	EKRORO wire	EKRORO wire	EKRORO wire	EKRORO wire	EKRORO wire	EKRORO wire
Operating range [3]	Cooling Min / Max	°C	-15 / 43	-15 / 43	-15 / 43	-15 / 43	-15 / 43	-15 / 43	-15 / 43
	Heating Min / Max	°C	-20 / 24	-20 / 24	-20 / 24	-20 / 24	-20 / 24	-20 / 24	-20 / 24

GLOBAL REMARKS	Rating conditions	Cooling	Heating
	Inside air temperature	27°C DB / 19°C WB	20°C DB
	Outside air temperature	35°C DB / 24°C WB	7°C DB / 6°C WB

DB: Dry bulb, WB: Wet bulb

1) EER and COP, Energy Saving Classification, is at 220 - 240V (380 - 415V) only in accordance with EU directive 2002/31/EC.
2) The annual consumption is calculated by multiplying the input power at 220 - 240V (380 - 415V) by an average of 500-hr per year in cooling mode.
3) The specification listed on the table indicates values under the condition of 50Pa (5,1 mmAq) which are applied for factory default setting.
4) The sound pressure Level of the units shows the value measured of a position 1 meter in front of the main body and 1,5 from the ground
The sound pressure is measured in accordance with Eurovent 6/C/006-97 specification.
5) Add 100mm for indoor unit or 70mm for outdoor unit for piping port.
6) When installing the outdoor unit at a higher position than the indoor unit.
7) Change connector on fan motor from Hi to SHi.
8) By reducing the air volume on the air duct.

CU-L24DBE5
CU-L28DBE5

CU-L34DBE5 CU-L43DBE8
CU-L34DBE8 CU-L50DBE8
CU-L43DBE5

KIT-F24DD3E5 // KIT-F28DD3E5 // KIT-F34DD3E5 // KIT-F34DD3E8 // KIT-F43DD3E5 // KIT-F43DD3E8 // KIT-F50DD3E8

ENERGY EFFICIENCY AND ECOLOGY
- Maximum efficiency Inverter system
- R410A environmentally friendly refrigerant gas

COMFORT
- Cooling with low outdoor temperatures (down to -20 ºC)
- Automatic start after a power cut
- Automatic fan operation mode
- Soft dry operation mode
- Hot start mode
- Selection of temperature sensor at indoor unit or wired remote control

EASE OF USE
- Weekly On/Off timer (6 settings per day and 42 per week)
- Wired remote control

EASY INSTALLATION AND MAINTENANCE
- Installation using existing pipes
- Selectable static pressure up to 7 mmAq
- Self-diagnostic function
- Condensation control
- Ultra compact indoor unit

SPACE NEEDED FOR INSTALLATION

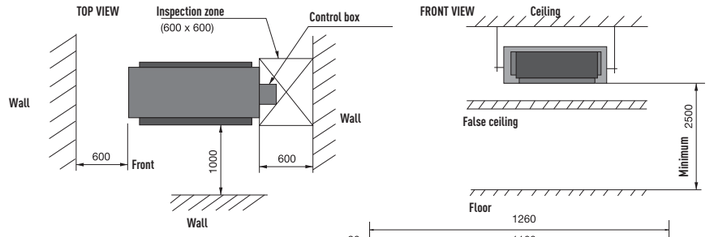

INDOOR UNIT DIMENSIONS

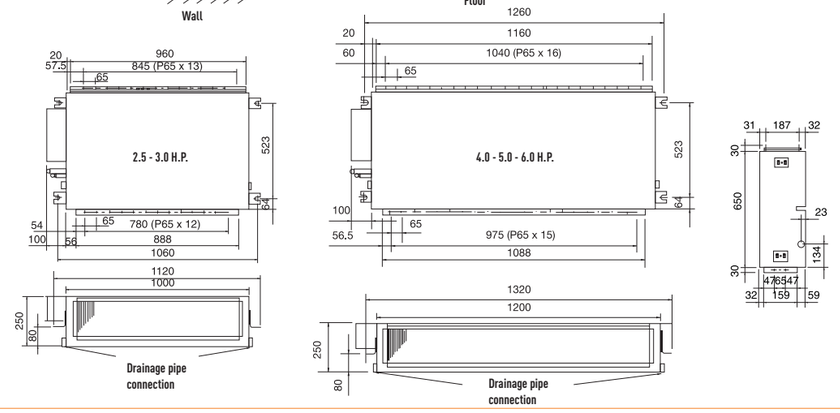

TECHNICAL ZOOM

- ULTRA COMPACT OUTDOOR UNITS (-40% REDUCED SIZE FOR THE CU-YL34HBE5)
- ECO MODE FOR 20% ENERGY SAVING
- EXTREMELY COMPACT INDOOR UNITS WITHOUT LOSING STATIC PRESSURE (ONLY 250MM HIGH)
- COOLING WITH LOW OUTDOOR TEMPERATURES (DOWN TO -20 ºC)
- WEEKLY TIMER, 42 SETTINGS PER WEEK
- EASY CHECK MODE FOR FAILURE DETECTION

LOW STATIC PRESSURE
HIDE AWAY // INVERTER FS TYPE

Compact line up of inverter Hide away, from 1.0 H.P. to 5.0 H.P., Single-phase

A class energy saving INVERTER

down to -20ºC in heating mode OUTDOOR TEMPERATURE

down to -15ºC in cooling mode OUTDOOR TEMPERATURE

CZ-RD513C / CZ-RD52CP WIRED

			1 HP	1.5 HP	2 HP	2.5 HP	3.0 HP	4.0 HP	5.0 HP
KIT			KIT-E10-JD3EA	KIT-E15-JD3EA	KIT-E18-JD3EA	KIT-YH24DD3E5	KIT-YH28DD3E5	KIT-YH34DD3E5	KIT-YH43DD3E5
Indoor			CS-E10KD3EA	CS-E15JD3EA	CS-E18JD3EA	CS-F24DD3E5	CS-F28DD3E5	CS-F34DD3E5	CS-F43DD3E5
Outdoor			CU-E10HBEA	CU-E15HBEA	CU-E18HBEA	CU-YL24HBE5	CU-YL28HBE5	CU-YL34HBE5	CU-YL43HBE5
Wired remote control			CZ-RD52CP	CZ-RD52CP	CZ-RD52CP	CZ-RD513C	CZ-RD513C	CZ-RD513C	CZ-RD513C
Cooling capacity	Nominal (Min - Max)	kW	2.50 (0.80-3.00)	4.10 (0.90-4.70)	5.10 (0.90-5.70)	5.60 (2 - 6.30)	7.10 (2.10 - 7.50)	10.00 (3.8 - 10.50)	12.50 (3.80 - 13.00)
	Nominal (Min - Max)	kCal/h	2150 (690-2580)	3530 (770-4040)	4390 (770-4900)	4816 (1720-5418)	6106 (1806-6450)	8600 (3268-9030)	10750 (3268-11180)
EER [1]	Nominal (Min - Max)		3.68 (3.87-3.53) A	3.31 (3.53-3.13) A	3.15 (3.53-3.10) B	2.81 (3.64-2.86) C	2.81 (3.23-2.88) C	2.61 (2.92-2.56) D	3.81 (2.92-2.77) C
Power input Cooling	Nominal (Min-Max)	kW	0.680 (0.155-0.850)	1.240 (0.255-1.500)	1.620 (0.250-1.840)	1.990 (0.550-2.200)	2.530 (0.650-2.600)	3.560 (1.300-4.100)	4.450 (1.300-4.700)
Heating capacity	Nominal (Min - Max)	kW	3.20 (0.60-5.00)	4.80 (0.90-55.0)	6.10 (0.90-7.10)	7.00 (2.10-7.50)	8.00 (2.20-8.30)	11.20 (3.80-12.50)	14.00 (3.80-14.50)
	Nominal (Min - Max)	kCal/h	2752 (516-4300)	4130 (770-4730)	5250 (770-6110)	6020 (1806-6450)	6880 (1892-7138)	9632 (3268-10750)	12040 (3268-12470)
COP [1]	Nominal (Min - Max)		3.64 (4.44-3.27) A	2.64 (3.46-2.63) E	3.30 (3.46-3.23) C	2.81 (4.20-2.68) D	2.81 (3.67-2.59) D	3.01 (3.17-2.94) C	3.01 (3.17-2.90) C
Power input Heating	Nominal (Min - Max)	kW	0.880 (0.135-1.530)	1.820 (0.260-2.090)	1.850 (0.260-2.200)	2.490 (0.500-2.800)	2.850 (0.600-3.200)	3.720 (1.200-4.250)	4.650 (1.200-5.000)
Annual Energy Consumption [2]		kWh	340	620	810	995	1,265	1,780	2,225
INDOOR UNIT									
External static pressure [3]	High (Shigh)	mmAq	3.5 (5.5 [7])	3.5 (7.0 [7])	3.5 (6.0 [7])	5.1 [7] (7.0 [8])	5.1 [7] (7.0 [8])	5.1 [7] (7.0 [8])	5.1 [7] (7.0 [8])
	Medium	mmAq	1.5	1.5	1.5	2.6	2.6	2.8	2.8
	Low	mmAq	1	1	1	1.8	1.8	2	2
Air Volume	High (Shigh)	m^3/h	414 (660 [7])	474 (660 [7])	624 (750 [7])	1.320 [7] (1.200 [8])	1.320 [7] (1.200 [8])	2.160 [7] (2.010 [8])	2.400 [7] (2.190 [8])
	Medium	m^3/h	402	402	528	984	984	1,620	1,770
	Low	m^3/h	330	330	444	810	810	1,320	1,420
Moisture removal volume		l/h	1.50	2.30	2.80	3.20	4.20	6.00	7.90
Sound pressure Level [4]	Cooling (Hi / Lo)	dB(A)	33 / 24	33 / 24	41 / 27	43 / 39	43 / 39	45 / 41	45 / 41
	Heating (Hi / Lo)	dB(A)	35 / 25	35 / 25	41 / 29	43 / 39	43 / 39	44 / 40	44 / 40
Sound power Level	Cooling (Hi)	dB	49	49	57	59	59	60	60
	Heating (Hi)	dB	51	51	57	59	59	60	60
Dimensions	H x W x D	mm	235x750+65 [5]x370	235x750+65 [5]x370	285x750+65 [5]x370	250x1,000+100 [5]x650	250x1,000+100 [5]x650	250x1,200+100 [5]x650	250x1,200+100 [5]x650
Net weight	Indoor	Kg	17	18	18	41	41	47	47
Dust filter			No	No	No	Yes	Yes	Yes	Yes
OUTDOOR UNIT									
Power source		V	220 - 240	220 - 240	220 - 240	220 - 240	220 - 240	220 - 240	220 - 240
Connection		mm^2	4 x 1.5 to 2.5	4 x 1.5 to 2.5	4 x 1.5 to 2.5	4 x 1.5 to 2.5	4 x 1.5 to 2.5	4 x 1.5 to 2.5	4 x 1.5 to 2.5
Current Cooling	Nominal (Min / Max)	A	2.9	5.7	7.3	9.00	11.40	16.30	20.30
Current Heating	Nominal (Min / Max)	A	3.8	8.2	8.3	11.30	12.20	17.00	21.20
Air Volume	Cooling / Heating	m^3/h	1,728	2,808	2,400	3,180	3,480	3,720	5,640
Sound pressure Level [4]	Cooling (Hi)	dB(A)	45	46	47	49	50	53	54
	Heating (Hi)	dB(A)	46	47	48	51	52	56	56
Sound power Level	Cooling (Hi)	dB	58	59	60	67	68	71	72
	Heating (Hi)	dB	59	60	61	68	69	73	73
Dimensions	H x W x D	mm	540x780+70 [5]x289	750x875+70 [5]x345	750x875+70 [5]x345	795x875+70 [5]x320	795x875+70 [5]x320	795x900x320	1170x900x320
Net weight		Kg	35	48	48	65	65	66	94
Piping connections	Liquid pipe	inch (mm)	1/4" (6.35)	1/4" (6.35)	1/4" (6.35)	3/8" (9.52)	3/8" (9.52)	3/8" (9.52)	3/8" (9.52)
	Gas pipe	inch (mm)	3/8" (9.52)	1/2" (12.70)	1/2" (12.70)	5/8" (15.88)	5/8" (15.88)	5/8" (15.88)	5/8" (15.88)
Refrigerant Loading	R410A	Kg	1.15	1.23	1.06	1.63	2.05	2.8	2.8
Elevation difference (in/out) [6]	Max	m	15	15	20	25	25	25	25
Piping length	Min - Max	m	3 - 20	3 - 20	3 - 30	7.5 - 30	7.5 - 30	7.5 - 50	7.5 - 50
Piping length without refrigerent increase	Max	m	10	10	10	25	25	25	25
Additional gas		g/m	20	20	20	50	50	50	50
Area control accessory						EKRORO wire	EKRORO wire	EKRORO wire	EKRORO wire
Operating range [3]	Cooling Min / Max	°C	-10/43	-10/43	-10/43	-5 / 43	-5 / 44	-5 / 45	-5 / 46
	Heating Min / Max	°C	-10/24	-10/24	-10/24	-15 / 24	-15 / 25	-15 / 26	-15 / 27

GLOBAL REMARKS	Rating conditions	Cooling	Heating
	Inside air temperature	27°C DB / 19°C WB	20°C DB
	Outside air temperature	35°C DB / 24°C WB	7°C DB / 6°C WB

DB: Dry bulb, WB: Wet bulb

1) EER and COP, Energy Saving Classification, is at 220 - 240V (380 - 415V) only in accordance with EU directive 2002/31/EC.
2) The annual consumption is calculated by multiplying the input power at 220 - 240V (380 - 415V) by an average of 500-hr per year in cooling mode.
3) The specification listed on the table indicates values under the condition of 50Pa (5,1 mmAq) which are applied for factory default setting.
4) The sound pressure Level of the units shows the value measured of a position 1 meter in front of the main body and 1,5 from the ground
The sound pressure is measured in accordance with Eurovent 6/C/006-97 specification.
5) Add 100mm for indoor unit or 70mm for outdoor unit for piping port.
6) When installing the outdoor unit at a higher position than the indoor unit.
7) Change connector on fan motor from Hi to SHi.
8) By reducing the air volume on the air duct.

CU-E10HBEA CU-E18HBEA
CU-E15HBEA

CU-YL24HBE5
CU-YL28HBE5

CU-YL34HBE5

CU-YL43HBE5

KIT-E10-JD3EA // KIT-E15-JD3EA // KIT-E18-JD3EA // KIT-YH24DD3E5 // KIT-YH28DD3E5 // KIT-YH34DD3E5 // KIT-YH43DD3E5

ENERGY EFFICIENCY AND ECOLOGY
- Maximum efficiency Inverter system
- R410A environmentally friendly refrigerant gas

COMFORT
- Cooling with low outdoor temperatures (down to -15 ºC)
- Automatic start after a power cut
- Automatic fan operation mode
- Soft dry operation mode
- Hot start mode
- Selection of temperature sensor at indoor unit or wired remote control

EASE OF USE
- Weekly On/Off timer (6 settings per day and 42 per week)
- Wired remote control

EASY INSTALLATION AND MAINTENANCE
- Installation using existing pipes
- Selectable static pressure up to 7 mmAq
- Self-diagnostic function
- Condensation control
- Ultra compact indoor unit

SPACE NEEDED FOR INSTALLATION

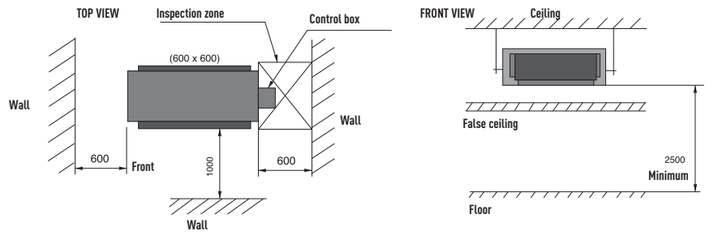

INDOOR UNIT DIMENSIONS

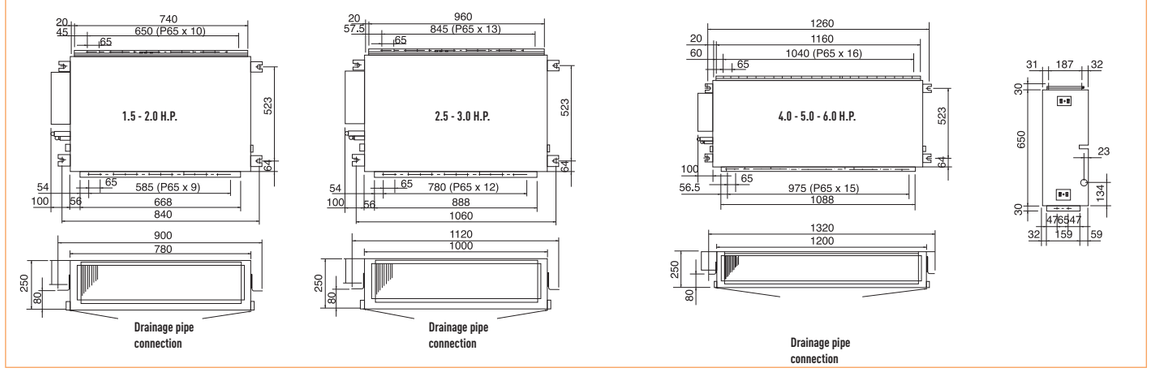

TECHNICAL ZOOM

- EXTREMELY COMPACT INDOOR UNITS WITHOUT LOSING STATIC PRESSURE (ONLY 250MM HIGH)
- ECO MODE FOR 20% ENERGY SAVING
- WEEKLY TIMER, 42 SETTINGS PER WEEK
- EASY CHECK MODE FOR FAILURE DETECTION

LOW STATIC PRESSURE
HIDE AWAY // HEAT PUMP FS TYPE

Full line up of heat pump non-inverter Hide away, from 1.5 H.P. to 6.0 H.P., Single-phase and three-phase

down to -10°C in cooling mode — OUTDOOR TEMPERATURE

down to -10°C in heating mode — OUTDOOR TEMPERATURE

CZ-RD513C

			1.5 H.P.	2.0 H.P.	2.5 H.P.	3.0 H.P.	3.0 H.P.	4.0 H.P.	4.0 H.P.	5.0 H.P.	6.0 H.P.
KIT			KIT-F14DD3E5-C	KIT-F18DD3E5-C	KIT-F24DD3E5-C	KIT-F28DD3E5-C	KIT-F28DD3E8-C	KIT-F34DD3E5-C	KIT-F34DD3E8-C	KIT-F43DD3E8-C	KIT-F50DD3E8-C
Indoor			CS-F14DD3E5	CS-F18DD3E5	CS-F24DD3E5	CS-F28DD3E5	CS-F28DD3E5	CS-F34DD3E5	CS-F34DD3E5	CS-F43DD3E5	CS-F50DD3E5
Outdoor			CU-B14DBE5	CU-B18DBE5	CU-B24DBE5	CU-B28DBE5	CU-B28DBE8	CU-B34DBE5	CU-B34DBE8	CU-B43DBE8	CU-B50DBE8
Wired remote control			CZ-RD513C	CZ-RD513C	CZ-RD513C	CZ-RD513C	CZ-RD513C	CZ-RD513C	CZ-RD513C	CZ-RD513C	CZ-RD513C
Cooling capacity	Nominal (Min-Max)	kW	3.80	5.00	6.60	7.30	7.30	10.00	10.00	12.50	13.50
	Nominal (Min-Max)	kCal/h	3,268	4,300	5,676	6,278	6,278	8,600	8,600	10,750	11,610
EER [1]	Nominal (Min-Max)		2.88 C	2.66 D	2.55 E	2.57 E	2.57 E	2.58 E	2.67 E	2.60 E	2.54 E
Power input Cooling	Nominal (Min-Max)	kW	1.35 (1.32-1.38)	1.89 (1.86-1.92)	2.59 (2.56-2.64)	2.84 (2.78-2.89)	2.84 (2.78-2.89)	3.88 (3.83-4.05)	3.75 (3.7-3.8)	4.80 (4.75-4.87)	5.31 (5.26-5.46)
Heating capacity	Nominal (Min-Max)	kW	4.30	5.60	7.10	8.00	8.00	11.20	11.20	14.00	15.00
	Nominal (Min-Max)	kCal/h	3,698	4,816	6,106	6,880	6,880	9,632	9,632	12,040	12,900
COP [1]	Nominal (Min-Max)		3.31 C	3.29 C	2.87 D	2.97 D	2.97 D	2.84 D	3.13 D	2.99 D	2.95 D
Power input Heating	Nominal (Min-Max)	kW	1.21 (1.18-1.24)	1.70 (1.67-1.73)	2.47 (2.4-2.56)	2.69 (2.61-2.78)	2.69 (2.61-2.78)	3.94 (3.86-4.0)	3.58 (3.54-3.64)	4.68 (4.61-4.78)	5.08 (5.03-5.13)
Annual Energy Consumption [2]		kWh	675	945	1,295	1,420	1,420	1,940	1,875	2,400	2,655
INDOOR UNIT											
External static pressure [3]	High (Shigh)	mmAq	5,1 [7] (7,0 [8])	5,1 [7] (7,0 [8])	5,1 [7] (7,0 [8])	5,1 [7] (7,0 [8])	5,1 [7] (7,0 [8])	5,1 [7] (7,0 [8])	5,1 [7] (7,0 [8])	5,1 [7] (7,0 [8])	5,1 [7] (7,0 [8])
	Medium	mmAq	2.5	2.5	2.6	2.6	2.6	2.8	2.8	2.8	3
	Low	mmAq	1.7	1.7	1.8	1.8	1.8	2	2	2	2.5
Air Volume	High (Shigh)	m^3/h	1,020	1,020	1,320 [7] (1,200 [8])	1,320 [7] (1,200 [8])	1,320 [7] (1,200 [8])	2,160 [7] (2,010 [8])	2,160 [7] (2,010 [8])	2,400 [7] (2,190 [8])	2,640 [7] (2,430 [8])
	Medium	m^3/h	798	798	984	984	984	1,620	1,620	1,770	1,920
	Low	m^3/h	660	660	810	810	810	1,320	1,320	1,420	1,560
Moisture removal volume		l/h	2.2	2.8	3.8	4.3	4.3	6.0	6.0	7.9	8.6
Sound pressure Level [4]	Cooling (Hi / Lo)	dB(A)	42 / 38	42 / 38	43 / 39	43 / 39	43 / 39	45 / 41	45 / 41	45 / 41	46 / 42
	Heating (Hi / Lo)	dB(A)	40 / 36	40 / 36	43 / 39	43 / 39	43 / 39	44 / 40	44 / 40	44 / 40	45 / 41
Sound power Level	Cooling (Hi)	dB	58	58	59	59	59	60	60	60	61
	Heating (Hi)	dB	56	56	59	59	59	59	59	59	60
Dimensions. indoor	H x W x D	mm	250x1,000+100[5]x650	250x1,000+100[5]x650	250x1,000+100[5]x650	250x1,000+100[5]x650	250x1,000+100[5]x650	250x1,200+100[5]x650	250x1,200+100[5]x650	250x1,200+100[5]x650	250x1,200+100[5]x650
Net weight	Indoor	Kg	34	34	41	41	41	47	47	47	47
Dust filter			Yes	Yes	Yes	Yes	Yes	Yes	Yes	Yes	Yes
OUTDOOR UNIT											
Power source		V	220 - 240	220 - 240	220 - 240	220 - 240	380 - 415	220 - 240	380 - 415	380 - 415	380 - 415
Connection		mm^2	4 x 1'5 to 2'5	4 x 1'5 to 2'5	4 x 1'5 to 2'5	4 x 1'5 to 2'5	4 x 1'5 to 2'5	4 x 1'5 to 2'5	4 x 1'5 to 2'5	4 x 1'5 to 2'5	4 x 1'5 to 2'5
Current Cooling	Nominal (Min / Max)	A	6.31	8.53	12.9	13.5	4.9	18.6	6.45	8.1	8.8
Current Heating	Nominal (Min / Max)	A	5.36	7.63	11.8	12.6	4.7	18.6	6.2	7.9	8.4
Air Volume	Cooling / Heating	m^3/h	3,240 / 3,240	3,420 / 3,429	3,600 / 3,600	3,780 / 3,780	3,780 / 3,780	5,640 / 5,640	5,640 / 5,640	5,640 / 5,640	5,760 / 5,760
Sound pressure Level [4]	Cooling (Hi)	dB(A)	49	49	50	52	52	55	55	56	56
	Heating (Hi)	dB(A)	50	50	51	53	53	56	56	57	57
Sound power Level	Cooling (Hi)	dB	65	65	66	67	67	69	69	70	70
	Heating (Hi)	dB	66	66	67	68	68	70	70	71	71
Dimensions	H x W x D	mm	795x900x320	795x900x320	795x900x320	795x900x320	795x900x320	1,170x900x320	1,170x900x320	1,170x900x320	1,170x900x320
Net weight		Kg	55	57	69	69	69	102	100	102	102
Piping connections	Liquid pipe	inch (mm)	1/4" (6.35)	1/4" (6.35)	3/8" (9.52)	3/8" (9.52)	3/8" (9.52)	3/8" (9.52)	3/8" (9.52)	3/8" (9.52)	3/8" (9.52)
	Gas pipe	inch (mm)	1/2" (12.70)	1/2" (12.70)	5/8" (15.88)	5/8" (15.88)	5/8" (15.88)	5/8" (15.88)	5/8" (15.88)	5/8" (15.88)	5/8" (15.88)
Refrigerant Loading	R410A	Kg	1.1	1.35	1.7	2.05	2.05	2.7	2.7	3.1	3.4
Elevation difference (in/out) [6]	Max	m	20	20	30	30	30	30	30	30	30
Piping length	Min - Max	m	7.5 - 30	7.5 - 30	7.5 - 50	7.5 - 50	7.5 - 50	7.5 - 50	7.5 - 50	7.5 - 50	7.5 - 50
Piping length without refrigerent increase	Max	m	20	20	30	30	30	30	30	30	30
Additional gas		g/m	20	20	50	50	50	50	50	50	50
Area control accessory			EKRORO wire	EKRORO wire	EKRORO wire	EKRORO wire	EKRORO wire	EKRORO wire	EKRORO wire	EKRORO wire	EKRORO wire
Operating range [3]	Cooling Min / Max	°C	-10 / 43	-10 / 43	-10 / 43	-10 / 43	-10 / 43	-10 / 43	-10 / 43	-10 / 43	-10 / 43
	Heating Min / Max	°C	-10 / 24	-10 / 24	-10 / 24	-10 / 24	-10 / 24	-10 / 24	-10 / 24	-10 / 24	-10 / 24

GLOBAL REMARKS	Rating conditions	Cooling	Heating
	Inside air temperature	27°C DB / 19°C WB	20°C DB
	Outside air temperature	35°C DB / 24°C WB	7°C DB / 6°C WB

DB: Dry bulb, WB: Wet bulb

1) EER and COP, Energy Saving Classification, is at 220 - 240V (380 - 415V) only in accordance with EU directive 2002/31/EC.
2) The annual consumption is calculated by multiplying the input power at 220 - 240V (380 - 415V) by an average of 500-hr per year in cooling mode.
3) The specification listed on the table indicates values under the condition of 50Pa (5,1 mmAq) which are applied for factory default setting.
4) The sound pressure Level of the units shows the value measured of a position 1 meter in front of the main body and 1,5 from the ground
The sound pressure is measured in accordance with Eurovent 6/C/006-97 specification.
5) Add 100mm for indoor unit or 70mm for outdoor unit for piping port.
6) When installing the outdoor unit at a higher position than the indoor unit.
7) Change connector on fan motor from Hi to SHi.
8) By reducing the air volume on the air duct.

CU-B14DBE5 CU-B28DBE5
CU-B18DBE5 CU-B28DBE8
CU-B24DBE5

CU-B34DBE5 CU-B43DBE8
CU-B34DBE8 CU-B50DBE8

KIT-F14DD3E5-C // KIT-F18DD3E5-C // KIT-F24DD3E5-C // KIT-F28DD3E5-C // KIT-F28DD3E8-C // KIT-F34DD3E5-C // KIT-F34DD3E8-C // KIT-F43DD3E8-C // KIT-F50DD3E8-C

ENERGY EFFICIENCY AND ECOLOGY
- R410A environmentally friendly refrigerant gas

COMFORT
- Automatic start after a power cut
- Automatic fan operation mode
- Soft dry operation mode
- Hot start mode
- Selection of temperature sensor at the indoor unit or the wired remote control

EASE OF USE
- Weekly On/Off timer (6 settings per day and 42 per week)
- Wired remote control

EASY INSTALLATION AND MAINTENANCE
- Selectable static pressure up to 7 mmAq
- Self-diagnostic function
- Condensation control
- Ultra compact indoor unit

SPACE NEEDED FOR INSTALLATION

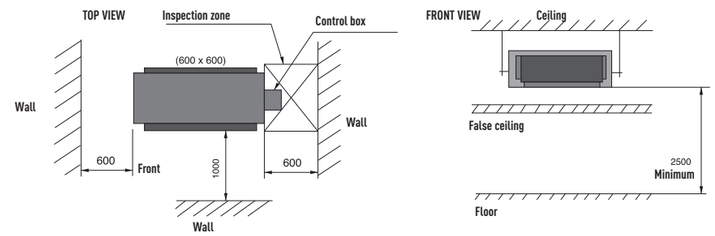

INDOOR UNIT DIMENSIONS

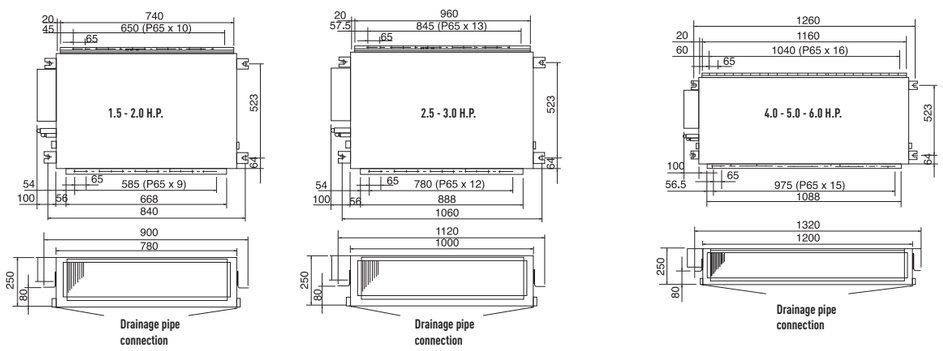

TECHNICAL ZOOM

- EXTREMELY COMPACT INDOOR UNITS WITHOUT LOSING STATIC PRESSURE (ONLY 250MM HIGH)
- ECO MODE FOR 20% ENERGY SAVING
- WEEKLY TIMER, 42 SETTINGS PER WEEK
- EASY CHECK MODE FOR FAILURE DETECTION

LOW STATIC PRESSURE
HIDE AWAY // COOLING ONLY FS TYPE

Full line up of cooling only non-inverter Hide away, from 1.5 H.P. to 6.0 H.P., Single-phase and three-phase

down to -10°C in cooling mode
OUTDOOR TEMPERATURE

CZ-RD513C

			1.5 H.P.	2.0 H.P.	2.5 H.P.	2.5 H.P.	3.0 H.P.	3.0 H.P.	4.0 H.P.	4.0 H.P.	5.0 H.P.	6.0 H.P.
KIT			KIT-F14DD3E5-F	KIT-F18DD3E5-F	KIT-F24DD3E5-F	KIT-F24DD3E8-F	KIT-F28DD3E5-F	KIT-F28DD3E8-F	KIT-F34DD3E5-F	KIT-F34DD3E8-F	KIT-F43DD3E8-F	KIT-F50DD3E8-F
Indoor			CS-F14DD3E5	CS-F18DD3E5	CS-F24DD3E5	CS-F24DD3E5	CS-F28DD3E5	CS-F28DD3E5	CS-F34DD3E5	CS-F34DD3E5	CS-F43DD3E5	CS-F50DD3E5
Outdoor			CU-J14DBE5	CU-J18DBE5	CU-J24DBE5	CU-J24DBE8	CU-J28DBE5	CU-J28DBE8	CU-J34DBE5	CU-J34DBE8	CU-J43DBE8	CU-J50DBE8
Wired remote control			CZ-RD513C	CZ-RD513C	CZ-RD513C	CZ-RD513C	CZ-RD513C	CZ-RD513C	CZ-RD513C	CZ-RD513C	CZ-RD513C	CZ-RD513C
Cooling capacity	Nominal (Min - Max)	kW	3.80	5.00	6.60	6.60	7.30	7.30	10.00	10.00	12.50	13.50
	Nominal (Min - Max)	kCal/h	3,268	4,300	5,676	5,676	6,278	6,278	8,600	8,600	10,750	11,610
EER [1]	Nominal (Min - Max)		2.81 C	2.69 D	2.48 E	2.48 E	2.53 E	2.53 E	2.48 E	2.63 D	2.58 E	2.50 E
Power input Cooling	Nominal (Min - Max)	kW	1.35 (1.32-1.38)	1.86 (1.83-1.89)	2.66 (2.62-2.70)	2.66 (2.62-2.70)	2.89 (2.83-2.94)	2.89 (2.83-2.94)	4.04 (3.95-4.12)	3.80 (3.75-3.85)	4.84 (4.80-4.95)	5.41 (5.36-5.51)
Annual Energy Consumption [2]		kWh	675	930	1,330	1,330	1,445	1,445	2,020	1,900	2,420	2,655
INDOOR UNIT												
External static pressure [3]	High (Shigh)	mmAq	5.1 [7] (7.0 [8])	5.1 [7] (7.0 [8])	5.1 [7] (7.0 [8])	5.1 [7] (7.0 [8])	5.1 [7] (7.0 [8])	5.1 [7] (7.0 [8])	5.1 [7] (7.0 [8])	5.1 [7] (7.0 [8])	5.1 [7] (7.0 [8])	5.1 [7] (7.0 [8])
	Medium	mmAq	2.5	2.5	2.6	2.6	2.6	2.6	2.8	2.8	2.8	3
	Low	mmAq	1.7	1.7	1.8	1.8	1.8	1.8	2	2	2	2.5
Air Volume	High (Shigh)	m^3/h	1,020	1,020	1,320 [7] (1,200 [8])	1,320 [7] (1,200 [8])	1,320 [7] (1,200 [8])	1,320 [7] (1,200 [8])	2,160 [7] (2,010 [8])	2,160 [7] (2,010 [8])	2,400 [7] (2,190 [8])	2,640 [7] (2,430 [8])
	Medium	m^3/h	798	798	984	984	984	984	1,620	1,620	1,770	1,920
	Low	m^3/h	660	660	810	810	810	810	1,320	1,320	1,420	1,560
Moisture removal volume		l/h	2.2	2.8	3.8	3.8	4.3	4.3	6.0	6.0	7.9	8.6
Sound pressure Level [4]	Hi / Lo	dB(A)	42 / 38	42 / 38	43 / 39	43 / 39	43 / 39	43 / 39	45 / 41	45 / 41	45 / 41	46 / 42
Sound power Level	Hi	dB	58	58	59	59	59	59	60	60	60	61
Dimensions. indoor	H x W x D	mm	250x1,000+100[5]x650	250x1,000+100[5]x650	250x1,000+100[5]x650	250x1,000+100[5]x650	250x1,000+100[5]x650	250x1,000+100[5]x650	250x1,200+100[5]x650	250x1,200+100[5]x650	250x1,200+100[5]x650	250x1,200+100[5]x650
Net weight	Indoor	Kg	34	34	41	41	41	41	47	47	47	47
Dust filter			Yes	Yes	Yes	Yes	Yes	Yes	Yes	Yes	Yes	Yes
OUTDOOR UNIT												
Power source		V	220 - 240	220 - 240	220 - 240	380 - 415	220 - 240	380 - 415	220 - 240	380 - 415	380 - 415	380 - 415
Connection		mm^2	4 x 1'5 to 2'5	4 x 1'5 to 2'5	4 x 1'5 to 2'5	4 x 1'5 to 2'5	4 x 1'5 to 2'5	4 x 1'5 to 2'5	4 x 1'5 to 2'5	4 x 1'5 to 2'5	4 x 1'5 to 2'5	4 x 1'5 to 2'5
Current Cooling	Nominal (Min / Max)	A	6.21	8.53	12.9	4.54	13.5	4.9	18.6	6.45	8.1	8.8
Air Volume	Cooling	m^3/h	3,240	3,420	3,600	3,600	3,780	3,780	5,640	5,640	5,640	5,760
Sound pressure Level [4]	Hi	dB(A)	49	49	50	50	52	52	55	55	56	56
Sound power Level	Hi	dB	65	65	66	66	67	67	69	69	70	70
Dimensions	H x W x D	mm	795x900x320	795x900x320	795x900x320	795x900x320	795x900x320	795x900x320	1,170x900x320	1,170x900x320	1,170x900x320	1,170x900x320
Net weight		Kg	55	57	69	69	69	69	102	100	102	102
Piping connections	Liquid pipe	inch (mm)	1/4" (6.35)	1/4" (6.35)	3/8" (9.52)	3/8" (9.52)	3/8" (9.52)	3/8" (9.52)	3/8" (9.52)	3/8" (9.52)	3/8" (9.52)	3/8" (9.52)
	Gas pipe	inch (mm)	1/2" (12.70)	1/2" (12.70)	5/8" (15.88)	5/8" (15.88)	5/8" (15.88)	5/8" (15.88)	5/8" (15.88)	5/8" (15.88)	5/8" (15.88)	5/8" (15.88)
Refrigerant Loading	R410A	Kg	1.1	1.35	1.7	1.7	2.05	2.05	2.7	2.7	3.1	3.4
Elevation difference (in/out) [6]	Max	m	20	20	30	30	30	30	30	30	30	30
Piping length	Min - Max	m	7.5 - 30	7.5 - 30	7.5 - 50	7.5 - 50	7.5 - 50	7.5 - 50	7.5 - 50	7.5 - 50	7.5 - 50	7.5 - 50
Piping length without refrigerent increase	Max	m	20	20	30	30	30	30	30	30	30	30
Additional gas		g/m	20	20	50	50	50	50	50	50	50	50
Area control accessory			EKRORO wire	EKRORO wire	EKRORO wire	EKRORO wire	EKRORO wire	EKRORO wire	EKRORO wire	EKRORO wire	EKRORO wire	EKRORO wire
Operating range [3]	Min / Max	°C	-10 / 43	-10 / 43	-10 / 43	-10 / 43	-10 / 43	-10 / 43	-10 / 43	-10 / 43	-10 / 43	-10 / 43

GLOBAL REMARKS	Rating conditions	Cooling
	Inside air temperature	27°C DB / 19°C WB
	Outside air temperature	35°C DB / 24°C WB

DB: Dry bulb, WB: Wet bulb

1) EER, Energy Saving Classification, is at 220 - 240V (380 - 415V) only in accordance with EU directive 2002/31/EC.
2) The annual consumption is calculated by multiplying the input power at 220 - 240V (380 - 415V) by an average of 500-hr per year in cooling mode.
3) The specification listed on the table indicates values under the condition of 50Pa (5,1 mmAq) which are applied for factory default setting.
4) The sound pressure Level of the units shows the value measured of a position 1 meter in front of the main body and 1,5 from the ground
The sound pressure is measured in accordance with Eurovent 6/C/006-97 specification.
5) Add 100mm for indoor unit or 70mm for outdoor unit for piping port.
6) When installing the outdoor unit at a higher position than the indoor unit.
7) Change connector on fan motor from Hi to SHi.
8) By reducing the air volume on the air duct.

CU-J14DBE5 CU-J24DBE8
CU-J18DBE5 CU-J28DBE5
CU-J24DBE5 CU-J28DBE8

CU-J34DBE5 CU-J43DBE8
CU-J34DBE8 CU-J50DBE8

KIT-F14DD3E5-F // KIT-F18DD3E5-F // KIT-F24DD3E5-F // KIT-F24DD3E8-F // KIT-F28DD3E5-F // KIT-F28DD3E8-F // KIT-F34DD3E5-F // KIT-F34DD3E8-F // KIT-F43DD3E8-F // KIT-F50DD3E8-F

ENERGY EFFICIENCY AND ECOLOGY
- R410A environmentally friendly refrigerant gas

COMFORT
- Automatic start after a power cut
- Automatic fan operation mode
- Soft dry operation mode
- Hot start mode
- Selection of temperature sensor at the indoor unit or the wired remote control

EASE OF USE
- Weekly On/Off timer (6 settings per day and 42 per week)
- Wired remote control

EASY INSTALLATION AND MAINTENANCE
- Selectable static pressure up to 7 mmAq
- Self-diagnostic function
- Condensation control
- Ultra compact indoor unit

SPACE NEEDED FOR INSTALLATION

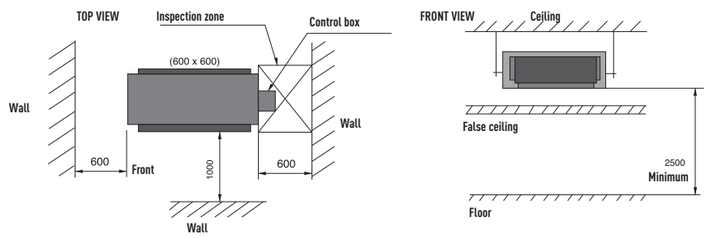

INDOOR UNIT DIMENSIONS

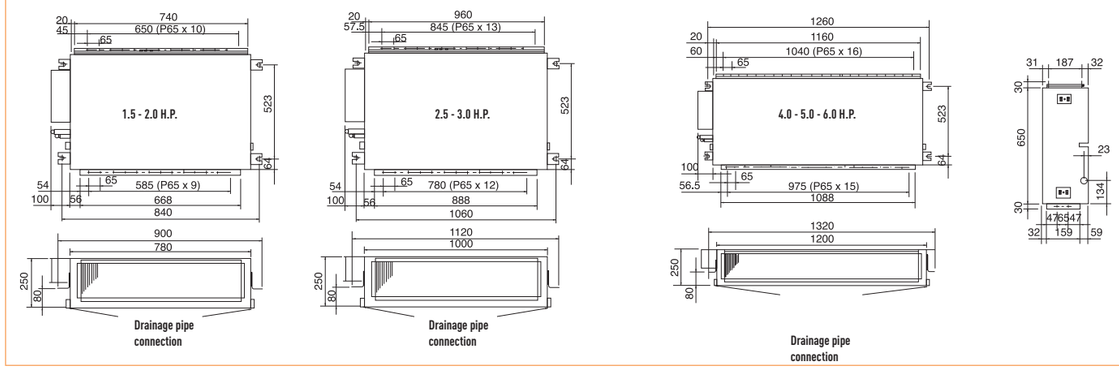

TECHNICAL ZOOM

- HIGHER ENERGY CLASS FOR HIGH SAVINGS, EVEN AT -20°C
- ECO MODE FOR 20% ENERGY SAVING
- STATIC PRESSURE UP TO 10MMAQ
- WEEKLY TIMER, 42 SETTINGS PER WEEK
- MAX ELEVATION DIFFERENCE 30M
- EASY CHECK MODE FOR FAILURE DETECTION

HIGH STATIC PRESSURE
HIDE AWAY // INVERTER + FS TYPE

A complete line up of efficient and powerful high static pressure hide away, for the most demanding customers, from 2.5 H.P. to 6.0 H.P., Single-phase and three-phase

A class energy saving INVERTER +

down to -20°C in heating mode OUTDOOR TEMPERATURE

down to -15°C in cooling mode OUTDOOR TEMPERATURE

CZ-RD513C

			2.5 H.P.	3.0 H.P.	4.0 H.P.	4.0 H.P.	5.0 H.P.	5.0 H.P.	6.0 H.P.
KIT			KIT-F24DD2E5	KIT-F28DD2E5	KIT-F34DD2E5	KIT-F34DD2E8	KIT-F43DD2E5	KIT-F43DD2E8	KIT-F50DD2E8
Indoor			CS-F24DD2E5	CS-F28DD2E5	CS-F34DD2E5	CS-F34DD2E5	CS-F43DD2E5	CS-F43DD2E5	CS-F50DD2E5
Outdoor			CU-L24DBE5	CU-L28DBE5	CU-L34DBE5	CU-L34DBE8	CU-L43DBE5	CU-L43DBE8	CU-L50DBE8
Wired remote control			CZ-RD513C	CZ-RD513C	CZ-RD513C	CZ-RD513C	CZ-RD513C	CZ-RD513C	CZ-RD513C
Cooling capacity	Nominal (Min-Max)	kW	6.30 (2.00-6.50)	7.10 (2.10-7.50)	10.00 (4.00-12.00)	10.00 (4.00-12.00)	12.50 (4.00-13.50)	12.50 (4.00-13.50)	14.00 (4.00-16.00)
	Nominal (Min-Max)	kCal/h	5,418 (1,720-5,590)	6,106 (1,806-6,450)	8,600 (3,440-10,320)	8,600 (3,440-10,320)	10,750 (3,440-11,610)	10,750 (3,440-11,610)	12,040 (3,440-13,760)
EER [1]	Nominal (Min-Max)		3.01 (3.33-2.71) B	3.01 (3.23-3.06) B	3.27 (2.96-3.43) A	3.27 (2.96-3.43) A	3.01 (2.86-3.00) B	3.01 (2.86-3.00) B	2.77 (2.76-2.96) D
Power input Cooling	Nominal (Min-Max)	kW	2.09 (0.6-2.4)	2.36 (0.65-2.45)	3.06 (1.35-3.5)	3.06 (1.35-3.5)	4.15 (1.4-4.5)	4.15 (1.4-4.5)	5.06 (1.45-5.4)
Heating capacity	Nominal (Min-Max)	kW	7.10 (2.10-7.50)	8.00 (2.20-8.50)	11.20 (4.00-13.50)	11.20 (4.00-13.50)	14.00 (4.00-15.50)	14.00 (4.00-15.50)	16.00 (4.00-18.00)
	Nominal (Min-Max)	kCal/h	6,106 (1,806-6,450)	6,880 (1,892-7,310)	9,632 (3,440-11,610)	9,632 (3,440-11,610)	12,040 (3,440-13,330)	12,040 (3,440-13,330)	13,760 (3,440-15,480)
COP [1]	Nominal (Min-Max)		3.41 (3.50-2.38) B	3.42 (3.38-2.62) B	3.41 (2.96-3.14) B	3.41 (2.96-3.14) B	3.21 (2.86-3.04) C	3.21 (2.86-3.04) C	3.30 (2.86-2.95) C
Power input Heating	Nominal (Min-Max)	kW	2.08 (0.6-3.15)	2.34 (0.65-3.25)	3.28 (1.35-4.3)	3.28 (1.35-4.3)	4.36 (1.4-5.1)	4.36 (1.4-5.1)	4.85 (1.4-6.1)
Annual Energy Consumption [2]		kWh	1,045	1,180	1,530	1,530	2,075	2,075	2,530
INDOOR UNIT									
External static pressure [3]	High	mmAq	7	7	10	10	10	10	10
	Medium	mmAq	5	5	6.6	6.6	6.6	6.6	6.6
	Low	mmAq	4.1	4.1	5.1	5.1	5.1	5.1	5.6
Air Volume	High	m^3/h	1,320	1,320	2,280	2,280	2,400	2,400	2,700
	Medium	m^3/h	1,020	1,020	1,920	1,920	1,980	1,980	2,100
	Low	m^3/h	870	870	1,620	1,620	1,680	1,680	1,740
Moisture removal volume		l/h	3.8	4.3	6.0	6.0	7.9	7.9	9.0
Sound pressure Level [4]	Cooling (Hi / Lo)	dB(A)	45 / 41	45 / 41	49 / 45	49 / 45	49 / 45	49 / 45	49 / 45
	Heating (Hi / Lo)	dB(A)	43 / 39	43 / 39	47 / 44	47 / 44	47 / 44	47 / 44	47 / 44
Sound power Level	Cooling (Hi)	dB	61	61	64	64	64	64	64
	Heating (Hi)	dB	59	59	62	62	62	62	62
Dimensions. indoor	H x W x D	mm	290x1,000+100[5]x500	290x1,000+100[5]x500	360x1,000+100[5]x650	360x1,000+100[5]x650	360x1,000+100[5]x650	360x1,000+100[5]x650	360x1,000+100[5]x650
Net weight	Indoor	Kg	35	35	48	48	48	48	48
Dust filter			No	No	No	No	No	No	No
OUTDOOR UNIT									
Power source		V	220 - 240	220 - 240	220 - 240	380 - 415	220 - 240	380 - 415	380 - 415
Connection		mm^2	4 x 1'5 to 2'5	4 x 1'5 to 2'5	4 x 1'5 to 2'5	4 x 1'5 to 2'5	4 x 1'5 to 2'5	4 x 1'5 to 2'5	4 x 1'5 to 2'5
Current Cooling	Nominal (Min / Max)	A	9.5	10.7	13.8	4.8	18.8	6.5	7.7
Current Heating	Nominal (Min / Max)	A	9.5	10.6	14.9	5.2	19.7	6.8	7.4
Air Volume	Cooling / Heating	m^3/h	2,880 / 2,880	2,880 / 2,880	5,880 / 5,880	5,880 / 5,880	5,880 / 5,880	5,880 / 5,880	5,880 / 5,880
Sound pressure Level [4]	Cooling (Hi)	dB(A)	47	48	52	52	53	53	54
	Heating (Hi)	dB(A)	49	50	54	54	55	55	56
Sound power Level	Cooling (Hi)	dB	63	64	66	66	67	67	68
	Heating (Hi)	dB	65	66	68	68	69	69	70
Dimensions	H x W x D	mm	795 x 900 x 320	795 x 900 x 320	1,340 x 900 x 320	1,340 x 900 x 320	1,340 x 900 x 320	1,340 x 900 x 320	1,340 x 900 x 320
Net weight		Kg	71	71	110	110	110	110	105
Piping connections	Liquid pipe	inch (mm)	3/8" (9.52)	3/8" (9.52)	3/8" (9.52)	3/8" (9.52)	3/8" (9.52)	3/8" (9.52)	3/8" (9.52)
	Gas pipe	inch (mm)	5/8" (15.88)	5/8" (15.88)	5/8" (15.88)	5/8" (15.88)	5/8" (15.88)	5/8" (15.88)	5/8" (15.88)
Refrigerant Loading	R410A	Kg	2.13	2.35	3.3	3.3	3.3	3.3	3.5
Elevation difference (in/out) [6]	Max	m	30	30	30	30	30	30	30
Piping length	Min - Max	m	7.5 - 50	7.5 - 50	7.5 - 50	7.5 - 50	7.5 - 50	7.5 - 50	7.5 - 50
Piping length without refrigerent increase	Max	m	30	30	30	30	30	30	30
Additional gas		g/m	50	50	50	50	50	50	50
Area control accessory			EKRORO wire	EKRORO wire	EKRORO wire	EKRORO wire	EKRORO wire	EKRORO wire	EKRORO wire
Operating range [3]	Cooling Min / Max	°C	-15 / 43	-15 / 43	-15 / 43	-15 / 43	-15 / 43	-15 / 43	-15 / 43
	Heating Min / Max	°C	-20 / 24	-20 / 24	-20 / 24	-20 / 24	-20 / 24	-20 / 24	-20 / 24

GLOBAL REMARKS	Rating conditions	Cooling	Heating
	Inside air temperature	27°C DB / 19°C WB	20°C DB
	Outside air temperature	35°C DB / 24°C WB	7°C DB / 6°C WB

DB: Dry bulb, WB: Wet bulb

1) EER and COP, Energy Saving Classification, is at 220 - 240V (380 - 415V) only in accordance with EU directive 2002/31/EC.
2) The annual consumption is calculated by multiplying the input power at 220 - 240V (380 - 415V) by an average of 500-hr per year in cooling mode.
3) The specification listed on the table indicates values under the condition of 50Pa (5,1 mmAq) which are applied for factory default setting.
4) The sound pressure Level of the units shows the value measured of a position 1 meter in front of the main body and 1,5 from the ground
The sound pressure is measured in accordance with Eurovent 6/C/006-97 specification.
5) Add 100mm for indoor unit or 70mm for outdoor unit for piping port.
6) When installing the outdoor unit at a higher position than the indoor unit.

KIT-F24DD2E5 // KIT-F28DD2E5 // KIT-F34DD2E5 // KIT-F34DD2E8 // KIT-F43DD2E5 // KIT-F43DD2E8 // KIT-F50DD2E8

CU-L24DBE5
CU-L28DBE5

CU-L34DBE5 CU-L43DBE8
CU-L34DBE8 CU-L50DBE8
CU-L43DBE5

ENERGY EFFICIENCY AND ECOLOGY
- Maximum efficiency Inverter system
- R410A environmentally friendly refrigerant gas

COMFORT
- Cooling with low outdoor temperatures (down to -20 ºC)
- Automatic start after a power cut
- Automatic fan operation mode
- Soft dry operation mode
- Hot start mode
- Selection of temperature sensor at indoor unit or wired remote control

EASE OF USE
- Weekly On/Off timer (6 settings per day and 42 per week)
- Wired remote control

EASY INSTALLATION AND MAINTENANCE
- Installation using existing pipes
- High static pressure units ideal for shops and offices
- Selectable static pressure up to 10 mmAq
- Self-diagnostic function
- Ultra compact indoor unit

SPACE NEEDED FOR INSTALLATION

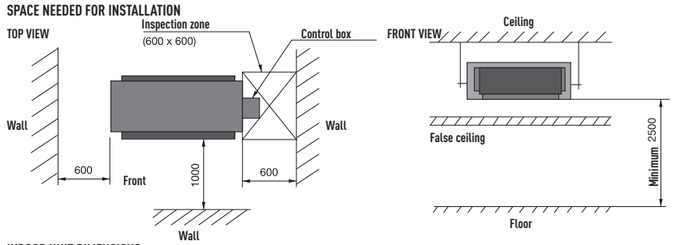

INDOOR UNIT DIMENSIONS

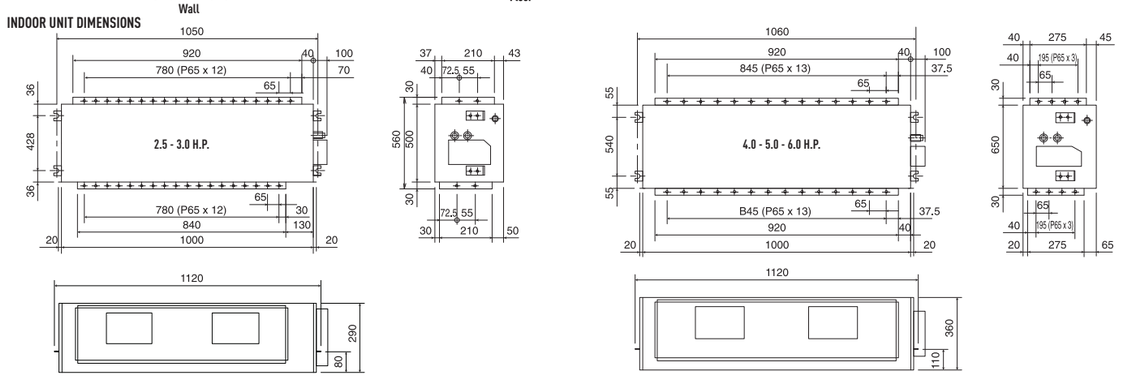

TECHNICAL ZOOM

- ULTRA COMPACT OUTDOOR UNITS (-40% REDUCED SIZE FOR THE CU-YL34HBE5)
- ECO MODE FOR 20% ENERGY SAVING
- COOLING WITH LOW OUTDOOR TEMPERATURES (DOWN TO -20 ºC)
- STATIC PRESSURE UP TO 10MMAQ
- WEEKLY TIMER, 42 SETTINGS PER WEEK
- EASY CHECK MODE FOR FAILURE DETECTION

HIGH STATIC PRESSURE HIDE AWAY // INVERTER FS TYPE

Compact line up of inverter High static Hide away, from 1.0 H.P. to 5.0 H.P., Single-phase

A class energy saving INVERTER

down to -20ºC in heating mode OUTDOOR TEMPERATURE

down to -15ºC in cooling mode OUTDOOR TEMPERATURE

CZ-RD513C

			2.5 H.P.	3.0 H.P.	4.0 H.P.	5.0 H.P.
KIT			KIT-YH24DD2E5	KIT-YH28DD2E5	KIT-YH34DD2E5	KIT-YH43DD2E5
Indoor			CS-F24DD2E5	CS-F28DD2E5	CS-F34DD2E5	CS-F43DD2E5
Outdoor			CU-YL24HBE5	CU-YL28HBE5	CU-YL34HBE5	CU-YL43HBE5
Wired remote control			CZ-RD513C	CZ-RD513C	CZ-RD513C	CZ-RD513C
Cooling capacity	Nominal (Min - Max)	kW	5.60 (2 - 6.30)	7.10 (2.10 - 7.70)	10.00 (3.8 - 10.50)	12.50 (3.80 - 13.00)
	Nominal (Min - Max)	kCal/h	4,816 (1,720 - 5,418)	6,106 (1,806 - 6,622)	8,600 (3,268 - 9,030)	10,750 (3,268 - 11,180)
EER [1]	Nominal (Min - Max)		2.81 (3.64 - 2.86) C	2.81 (3.23 - 2.96) C	2.81 (2.92 - 2.56) D	2.81 (2.92 - 2.77) C
Power input Cooling	Nominal (Min - Max)	kW	1.99 (0.55 - 2.20)	2.53 (0.65 - 2.60)	3.56 (1.30 - 4.10)	4.45 (1.30 - 4.70)
Heating capacity	Nominal (Min - Max)	kW	7.00 (2.10 - 7.60)	8.00 (2.20 - 8.30)	11.20 (3.80 - 12.50)	14.00 (3.80 - 14.50)
	Nominal (Min - Max)	kCal/h	6,020 (1,806 - 6,450)	6,880 (1,892 - 7,138)	9,632 (3,268 - 10,750)	12,040 (3,268 - 12,470)
COP [1]	Nominal (Min - Max)		2.81 (4.20 - 2.68) D	2.81 (3.67 - 2.59) D	3.01 (3.17 - 2.94) C	3.01 (3.17 - 2.90) C
Power input Heating	Nominal (Min - Max)	kW	2.49 (0.50 - 2.80)	2.85 (0.60 - 3.20)	3.72 (1.20 - 4.25)	4.65 (1.20 - 5.00)
Annual Energy Consumption [2]		kWh	995	1,265	1,780	2,225
INDOOR UNIT						
External static pressure [3]	High	mmAq	7	7	10	10
	Medium	mmAq	5	5	6.6	6.6
	Low	mmAq	4.1	4.1	5.1	5.1
Air Volume	High	m^3/h	1,320	1,320	2,400	2,400
	Medium	m^3/h	1,020	1,020	1,980	1,980
	Low	m^3/h	870	870	1,680	1,680
Moisture removal volume		l/h	3.20	4.20	6.00	7.90
Sound pressure Level [4]	Cooling (Hi / Lo)	dB(A)	45 / 41	45 / 41	49 / 45	49 / 45
	Heating (Hi / Lo)	dB(A)	43 / 39	43 / 39	47 / 44	47 / 44
Sound power Level	Cooling (Hi)	dB	67	68	71	72
	Heating (Hi)	dB	68	69	73	73
Dimensions. indoor	H x W x D	mm	290 x 1,000+100 [5] x 500	290 x 1,000+100 [5] x 500	390 x 1,000+100 [5] x 650	390 x 1,000+100 [5] x 650
Net weight	Indoor	Kg	35	35	48	48
Dust filter			No	No	No	No
OUTDOOR UNIT						
Power source		V	220 - 240	220 - 240	220 - 240	220 - 240
Connection		mm^2	4 x 1.5 to 2.5	4 x 1.5 to 2.5	4 x 1.5 to 2.5	4 x 1.5 to 2.5
Current Cooling	Nominal (Min / Max)	A	9.00	11.50	16.30	20.30
Current Heating	Nominal (Min / Max)	A	11.30	12.80	17.00	21.20
Air Volume	Cooling / Heating	m^3/h	2,880	2,880	5,880	5,880
Sound pressure Level [4]	Cooling (Hi)	dB(A)	49	50	53	54
	Heating (Hi)	dB(A)	51	52	56	56
Sound power Level	Cooling (Hi)	dB	67	68	71	72
	Heating (Hi)	dB	68	69	73	73
Dimensions	H x W x D	mm	795 x 875+70 [5] x 320	795 x 875+70 [5] x 320	795 x 900 x 320	1,170 x 900 x 320
Net weight		Kg	65	65	66	94
Piping connections	Liquid pipe	inch (mm)	3/8" (9.52)	3/8" (9.52)	3/8" (9.52)	3/8" (9.52)
	Gas pipe	inch (mm)	5/8" (15.88)	5/8" (15.88)	5/8" (15.88)	5/8" (15.88)
Refrigerant Loading	R410A	Kg	1.63	2.05	2.8	2.8
Elevation difference (in/out) [6]	Max	m	25	25	30	30
Piping length	Min - Max	m	7.5 - 30	7.5 - 30	7.5 - 50	7.5 - 50
Piping length without refrigerent increase	Max	m	30	30	30	30
Additional gas		g/m	50	50	50	50
Area control accessory			EKRORO wire	EKRORO wire	EKRORO wire	EKRORO wire
Operating range [3]	Cooling Min / Max	°C	-5 / 43	-5 / 44	-5 / 45	-5 / 46
	Heating Min / Max	°C	-15 / 24	-15 / 25	-15 / 26	-15 / 27

GLOBAL REMARKS	Rating conditions	Cooling	Heating
	Inside air temperature	27°C DB / 19°C WB	20°C DB
	Outside air temperature	35°C DB / 24°C WB	7°C DB / 6°C WB

DB: Dry bulb, WB: Wet bulb

1) EER and COP, Energy Saving Classification, is at 220 - 240V (380 - 415V) only in accordance with EU directive 2002/31/EC.
2) The annual consumption is calculated by multiplying the input power at 220 - 240V (380 - 415V) by an average of 500-hr per year in cooling mode.
3) The specification listed on the table indicates values under the condition of 50Pa (5,1 mmAq) which are applied for factory default setting.
4) The sound pressure Level of the units shows the value measured of a position 1 meter in front of the main body and 1,5 from the ground
The sound pressure is measured in accordance with Eurovent 6/C/006-97 specification.
5) Add 100mm for indoor unit or 70mm for outdoor unit for piping port.
6) When installing the outdoor unit at a higher position than the indoor unit.

CU-YL24HBE5
CU-YL28HBE5

CU-YL34HBE5

CU-YL43HBE5

KIT-YH24DD2E5 // KIT-YH28DD2E5 // KIT-YH34DD2E5 // KIT-YH43DD2E5

ENERGY EFFICIENCY AND ECOLOGY
- Inverter system
- R410A environmentally friendly refrigerant gas

COMFORT
- Cooling with low outdoor temperatures (down to -15 ºC)
- Automatic start after a power cut
- Automatic fan operation mode
- Soft dry operation mode
- Hot start mode
- Selection of temperature sensor at indoor unit or wired remote control

EASE OF USE
- Weekly On/Off timer (6 settings per day and 42 per week)
- Wired remote control

EASY INSTALLATION AND MAINTENANCE
- Installation using existing pipes
- Selectable static pressure up to 10 mmAq
- Self-diagnostic function
- Condensation control
- Ultra compact indoor unit

SPACE NEEDED FOR INSTALLATION

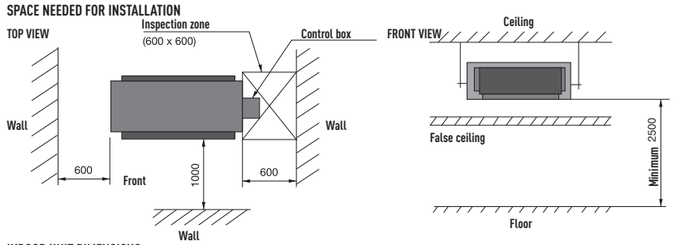

INDOOR UNIT DIMENSIONS

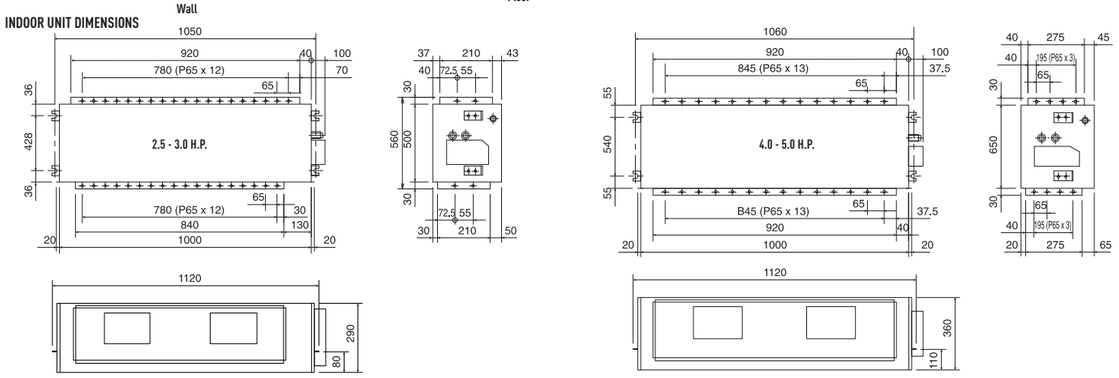

TECHNICAL ZOOM

+ STATIC PRESSURE UP TO 10MMAQ
+ ECO MODE FOR 20% ENERGY SAVING
+ MAX ELEVATION DIFFERENCE 30M
+ EASY CHECK MODE FOR FAILURE DETECTION

HIGH STATIC PRESSURE
HIDE AWAY // HEAT PUMP FS TYPE

Full line up of heat pump non-inverter High static pressure Hide away, from 2.5 H.P. to 6.0 H.P., Single-phase and three-phase

down to -10°C in cooling mode OUTDOOR TEMPERATURE

down to -10°C in heating mode OUTDOOR TEMPERATURE

CZ-RD513C

			2.5 H.P.	3.0 H.P.	3.0 H.P.	4.0 H.P.	4.0 H.P.	5.0 H.P.	6.0 H.P.
KIT			KIT-F24DD2E5-C	KIT-F28DD2E5-C	KIT-F28DD2E8-C	KIT-F34DD2E5-C	KIT-F34DD2E8-C	KIT-F43DD2E8-C	KIT-F50DD2E8-C
Indoor			CS-F24DD2E5	CS-F28DD2E5	CS-F28DD2E5	CS-F34DD2E5	CS-F34DD2E5	CS-F43DD2E5	CS-F50DD2E5
Outdoor			CU-B24DBE5	CU-B28DBE5	CU-B28DBE8	CU-B34DBE5	CU-B34DBE8	CU-B43DBE8	CU-B50DBE8
Wired remote control			CZ-RD513C	CZ-RD513C	CZ-RD513C	CZ-RD513C	CZ-RD513C	CZ-RD513C	CZ-RD513C
Cooling capacity	Nominal (Min - Max)	kW	6.60	7.30	7.30	10,00	10,00	12.50	13.50
	Nominal (Min - Max)	kCal/h	5,676	6,278	6,278	8,600	8,600	10,750	11,610
EER [1]	Nominal (Min - Max)		2.50 E	2.55 E	2.55 E	2,52 E	2,61 D	2.54 E	2.52 E
Power input Cooling	Nominal (Min - Max)	kW	2.64 (2.61-6.7)	2.86 (2.81-2.91)	2.86 (2.81-2.91)	3.97 (3.89-4.08)	3.83 (3.79-3.92)	4.92 (4.85-5.04)	5.36 (5.31-5.46)
Heating capacity	Nominal (Min - Max)	kW	7.10	8.00	8.00	11.20	11.20	14.00	15.00
	Nominal (Min - Max)	kCal/h	6,106	6,880	6,880	9,632	9,632	12,040	12,900
COP [1]	Nominal (Min - Max)		2.81 D	2.95 D	2.95 D	2.81 D	3.04 D	3.00 D	2.92 D
Power input Heating	Nominal (Min - Max)	kW	2.53 (2.45-2.62)	2.71 (2.62-2.8)	2.71 (2.62-2.8)	3.98 (3.9-4.05)	3.68 (3.63-3.75)	4.66 (4.56-4.78)	5.13 (5.08-5.18)
Annual Energy Consumption [2]		kWh	1,320	1,430	1,430	1,985	1,915	2,460	2,680
INDOOR UNIT									
External static pressure [3]	High	mmAq	7	7	7	10	10	10	10
	Medium	mmAq	5	5	5	6.6	6.6	6.6	6.6
	Low	mmAq	4.1	4.1	4.1	5.1	5.1	5.1	5.6
Air Volume	High	m^3/h	1,320	1,320	1,320	2,280	2,280	2,400	2,700
	Medium	m^3/h	1,020	1,020	1,020	1,920	1,920	1,980	2,100
	Low	m^3/h	870	870	870	1,620	1,620	1,680	1,740
Moisture removal volume		l/h	3.8	4.3	4.3	6.0	6.0	7.9	8.6
Sound pressure Level [4]	Cooling (Hi / Lo)	dB(A)	45 / 41	45 / 41	45 / 41	49 / 45	49 / 45	49 / 45	49 / 45
	Heating (Hi / Lo)	dB(A)	43 / 39	43 / 39	43 / 39	47 / 44	47 / 44	47 / 44	47 / 44
Sound power Level	Cooling (Hi)	dB	61	61	61	64	64	64	64
	Heating (Hi)	dB	59	59	59	62	62	62	62
Dimensions. indoor	H x W x D	mm	290x1,000+100[5]x500	290x1,000+100x500	290x1,000+100x500	360x1,000+100[5]x650	360x1,000+100[5]x650	360x1,000+100[5]x650	360x1,000+100[5]x650
Net weight	Indoor	Kg	35	35	35	48	48	48	48
Dust filter			No	No	No	No	No	No	No
OUTDOOR UNIT									
Power source		V	220 - 240	220 - 240	380 - 415	220 - 240	380 - 415	380 - 415	380 - 415
Connection		mm^2	4 x 1'5 to 2'5	4 x 1'5 to 2'5	4 x 1'5 to 2'5	4 x 1'5 to 2'5	4 x 1'5 to 2'5	4 x 1'5 to 2'5	4 x 1'5 to 2'5
Current Cooling	Nominal (Min / Max)	A	13.1	13.7	4.9	18.8	6.5	8.2	8.9
Current Heating	Nominal (Min / Max)	A	11.9	12.6	4.7	18.7	6.4	8.0	8.5
Air Volume	Cooling / Heating	m^3/h	3,600 / 3,600	3,780 / 3,780	3,780 / 3,780	5,640 / 5,640	5,640 / 5,640	5,640 / 5,640	5,760 / 5,760
Sound pressure Level [4]	Cooling (Hi)	dB(A)	50	52	52	55	55	56	56
	Heating (Hi)	dB(A)	51	53	53	56	56	57	57
Sound power Level	Cooling (Hi)	dB	66	67	67	69	69	70	70
	Heating (Hi)	dB	67	68	68	70	70	71	71
Dimensions	H x W x D	mm	795 x 900 x 320	795 x 900 x 320	795 x 900 x 320	1,170 x 900 x 320	1,170 x 900 x 320	1,170 x 900 x 320	1,170 x 900 x 320
Net weight		Kg	69	69	69	102	100	102	102
Piping connections	Liquid pipe	inch (mm)	3/8" (9.52)	3/8" (9.52)	3/8" (9.52)	3/8" (9.52)	3/8" (9.52)	3/8" (9.52)	3/8" (9.52)
	Gas pipe	inch (mm)	5/8" (15.88)	5/8" (15.88)	5/8" (15.88)	5/8" (15.88)	5/8" (15.88)	5/8" (15.88)	5/8" (15.88)
Refrigerant Loading	R410A	Kg	1.7	2.05	2.05	2.7	2.7	3.1	3.4
Elevation difference (in/out) [6]	Max	m	30	30	30	30	30	30	30
Piping length	Min - Max	m	7.5-50	7.5-50	7.5-50	7.5-50	7.5-50	7.5-50	7.5-50
Piping length without refrigerent increase	Max	m	30	30	30	30	30	30	30
Additional gas		g/m	50	50	50	50	50	50	50
Area control accessory			EKRORO wire	EKRORO wire	EKRORO wire	EKRORO wire	EKRORO wire	EKRORO wire	EKRORO wire
Operating range [3]	Cooling Min / Max	°C	-10 / 43	-10 / 43	-10 / 43	-10 / 43	-10 / 43	-10 / 43	-10 / 43
	Heating Min / Max	°C	-10 / 24	-10 / 24	-10 / 24	-10 / 24	-10 / 24	-10 / 24	-10 / 24

GLOBAL REMARKS	Rating conditions	Cooling	Heating
	Inside air temperature	27°C DB / 19°C WB	20°C DB
	Outside air temperature	35°C DB / 24°C WB	7°C DB / 6°C WB

DB: Dry bulb, WB: Wet bulb

1) EER and COP, Energy Saving Classification, is at 220 - 240V (380 - 415V) only in accordance with EU directive 2002/31/EC.
2) The annual consumption is calculated by multiplying the input power at 220 - 240V (380 - 415V) by an average of 500-hr per year in cooling mode.
3) The specification listed on the table indicates values under the condition of 50Pa (5,1 mmAq) which are applied for factory default setting.
4) The sound pressure Level of the units shows the value measured of a position 1 meter in front of the main body and 1,5 from the ground The sound pressure is measured in accordance with Eurovent 6/C/006-97 specification.
5) Add 100mm for indoor unit or 70mm for outdoor unit for piping port.
6) When installing the outdoor unit at a higher position than the indoor unit.

CU-B24DBE5 CU-B28DBE8
CU-B28DBE5

CU-B34DBE5 CU-B43DBE8
CU-B34DBE8 CU-B50DBE8

KIT-F24DD2E5-C // KIT-F28DD2E5-C // KIT-F28DD2E8-C // KIT-F34DD2E5-C // KIT-F34DD2E8-C // KIT-F43DD2E8-C // KIT-F50DD2E8-C

ENERGY EFFICIENCY AND ECOLOGY
- R410A environmentally friendly refrigerant gas

COMFORT
- Automatic start after a power cut
- Automatic fan operation mode
- Soft dry operation mode
- Hot start mode
- Selection of temperature sensor at the indoor unit or the wired remote control

EASE OF USE
- Weekly On/Off timer (6 settings per day and 42 per week)
- Wired remote control

EASY INSTALLATION AND MAINTENANCE
- High static pressure units ideal for shops and offices
- Selectable static pressure up to 10 mmAq
- Self-diagnostic function
- Ultra compact indoor unit

SPACE NEEDED FOR INSTALLATION

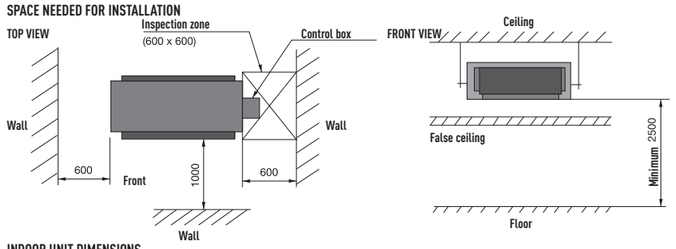

INDOOR UNIT DIMENSIONS

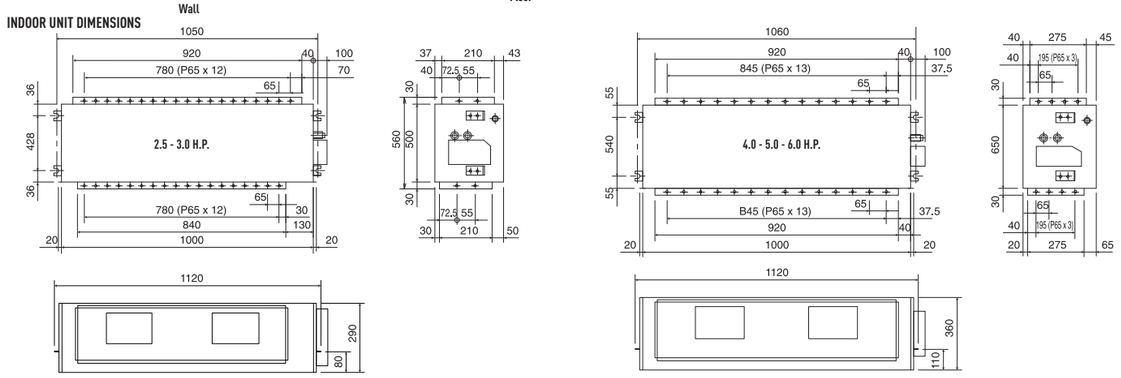

TECHNICAL ZOOM

- STATIC PRESSURE UP TO 10MMAQ
- ECO MODE FOR 20% ENERGY SAVING
- MAX ELEVATION DIFFERENCE 30M
- EASY CHECK MODE FOR FAILURE DETECTION

HIGH STATIC PRESSURE
HIDE AWAY // COOLING ONLY FS TYPE

Full line up of cooling only non-inverter High static pressure Hide Away, from 2.5 H.P. to 6.0 H.P., Single-phase and three-phase

down to -10°C in cooling mode
OUTDOOR TEMPERATURE

CZ-RD513C

			2.5 H.P.	2.5 H.P.	3.0 H.P.	3.0 H.P.	4.0 H.P.	4.0 H.P.	5.0 H.P.	6.0 H.P.
KIT			KIT-F24DD2E5-F	KIT-F24DD2E8-F	KIT-F28DD2E5-F	KIT-F28DD2E8-F	KIT-F34DD2E5-F	KIT-F34DD2E8-F	KIT-F43DD2E8-F	KIT-F50DD2E8-F
Indoor			CS-F24DD2E5	CS-F24DD2E5	CS-F28DD2E5	CS-F28DD2E5	CS-F34DD2E5	CS-F34DD2E5	CS-F43DD2E5	CS-F50DD2E5
Outdoor			CU-J24DBE5	CU-J24DBE8	CU-J28DBE5	CU-J28DBE8	CU-J34DBE5	CU-J34DBE8	CU-J43DBE8	CU-J50DBE8
Wired remote control			CZ-RD513C	CZ-RD513C	CZ-RD513C	CZ-RD513C	CZ-RD513C	CZ-RD513C	CZ-RD513C	CZ-RD513C
Cooling capacity	Nominal (Min - Max)	kW	6.60	6.60	7.30	7.30	10.00	10.00	12.50	13.50
	Nominal (Min - Max)	kCal/h	5,676	5,676	6,278	6,278	8,600	8,600	10,750	11,610
EER [1]	Nominal (Min - Max)		2.44 E	2.44 E	2.51 E	2.51 E	2,44 E	2,55 E	2.51 E	2.47 E
Power input Cooling	Nominal (Min - Max)	kW	2.70 (2.66-2.74)	2.70 (2.66-2.74)	2.91 (2.86-2.96)	2.91 (2.86-2.96)	4.10 (4.03-4.15)	3.92 (3.86-3.96)	4.96 (4.90-5.12)	5.46 (5.41-5.51)
Annual Energy Consumption [2]		kWh	1,350	1,350	1,455	1,455	2,050	1,960	2,490	2,680
INDOOR UNIT										
External static pressure [3]	High	mmAq	7	7	7	7	10	10	10	10
	Medium	mmAq	5	5	5	5	6.6	6.6	6.6	6.6
	Low	mmAq	4.1	4.1	4.1	4.1	5.1	5.1	5.1	5.6
Air Volume	High	m3/h	1,320	1,320	1,320	1,320	2,280	2,280	2,400	2,700
	Medium	m3/h	1,020	1,020	1,020	1,020	1,920	1,920	1,980	2,100
	Low	m3/h	870	870	870	870	1,620	1,620	1,680	1,740
Moisture removal volume		l/h	3.8	4.3	4.3	4.3	6.0	6.0	7.9	8.6
Sound pressure Level [4]	Hi / Lo	dB(A)	45 / 41	45 / 41	45 / 41	45 / 41	49 / 45	49 / 45	49 / 45	49 / 45
Sound power Level	Hi	dB	61	61	61	61	64	64	64	64
Dimensions. indoor	H x W x D	mm	290x1,000+100[5]x500	290x1,000+100[5]x500	290x1,000+100[5]x500	290x1,000+100[5]x500	360x1,000+100[5]x650	360x1,000+100[5]x650	360x1,000+100[5]x650	360x1,000+100[5]x650
Net weight	Indoor	Kg	35	35	35	35	48	48	48	48
Dust filter			No	No	No	No	No	No	No	No
OUTDOOR UNIT										
Power source		V	220 - 240	220 - 240	220 - 240	380 - 415	220 - 240	380 - 415	380 - 415	380 - 415
Connection		mm²	4 x 1'5 to 2'5	4 x 1'5 to 2'5	4 x 1'5 to 2'5	4 x 1'5 to 2'5	4 x 1'5 to 2'5	4 x 1'5 to 2'5	4 x 1'5 to 2'5	4 x 1'5 to 2'5
Current Cooling	Nominal (Min / Max)	A	13.1	4.63	13.7	4.9	18.8	6.5	8.2	9.0
Air Volume		m³/h	3,600	3,600	3,780	3,780	5,640	5,640	5,640	5,760
Sound pressure Level [4]	Hi	dB(A)	50	50	52	52	55	55	56	56
Sound power Level	Hi	dB	66	66	67	67	69	69	70	70
Dimensions	H x W x D	mm	795 x 900 x 320	795 x 900 x 320	795 x 900 x 320	795 x 900 x 320	1,170 x 900 x 320	1,170 x 900 x 320	1,170 x 900 x 320	1,170 x 900 x 320
Net weight		Kg	69	69	69	69	102	100	102	102
Piping connections	Liquid pipe	inch (mm)	3/8" (9.52)	3/8" (9.52)	3/8" (9.52)	3/8" (9.52)	3/8" (9.52)	3/8" (9.52)	3/8" (9.52)	3/8" (9.52)
	Gas pipe	inch (mm)	5/8" (15.88)	5/8" (15.88)	5/8" (15.88)	5/8" (15.88)	5/8" (15.88)	5/8" (15.88)	5/8" (15.88)	5/8" (15.88)
Refrigerant Loading	R410A	Kg	1.7	1.7	2.05	2.05	2.7	2.7	3.1	3.4
Elevation difference (in/out) [6]	Max	m	30	30	30	30	30	30	30	30
Piping length	Min - Max	m	7.5-50	7.5-50	7.5-50	7.5-50	7.5-50	7.5-50	7.5-50	7.5-50
Piping length without refrigerent increase	Max	m	30	30	30	30	30	30	30	30
Additional gas		g/m	50	50	50	50	50	50	50	50
Area control accessory			EKRORO wire	EKRORO wire	EKRORO wire	EKRORO wire	EKRORO wire	EKRORO wire	EKRORO wire	EKRORO wire
Operating range [3]	Min / Max	°C	-10 / 43	-10 / 43	-10 / 43	-10 / 43	-10 / 43	-10 / 43	-10 / 43	-10 / 43

GLOBAL REMARKS	Rating conditions	Cooling
	Inside air temperature	27°C DB / 19°C WB
	Outside air temperature	35°C DB / 24°C WB

DB: Dry bulb, WB: Wet bulb

1) EER, Energy Saving Classification, is at 220 - 240V (380 - 415V) only in accordance with EU directive 2002/31/EC
2) The annual consumption is calculated by multiplying the input power at 220 - 240V (380 - 415V) by an average of 500-hr per year in cooling mode.
3) The specification listed on the table indicates values under the condition of 50Pa (5,1 mmAq) which are applied for factory default setting.
4) The sound pressure Level of the units shows the value measured of a position 1 meter in front of the main body and 1,5 from the ground
The sound pressure is measured in accordance with Eurovent 6/C/006-97 specification.
5) Add 100mm for indoor unit or 70mm for outdoor unit for piping port.
6) When installing the outdoor unit at a higher position than the indoor unit.

CU-J24DBE5 CU-J28DBE5
CU-J24DBE8 CU-J28DBE8

CU-J34DBE5 CU-J43DBE8
CU-J34DBE8 CU-J50DBE8

KIT-F24DD2E5-F // KIT-F24DD2E8-F // KIT-F28DD2E5-F // KIT-F28DD2E8-F // KIT-F32DD2E5-F // KIT-F34DD2E8-F // KIT-F43DD2E8-F // KIT-F50DD2E8-F

ENERGY EFFICIENCY AND ECOLOGY
- R410A environmentally friendly refrigerant gas

COMFORT
- Automatic start after a power cut
- Automatic fan operation mode
- Soft dry operation mode
- Hot start mode
- Selection of temperature sensor at the indoor unit or the wired remote control

EASE OF USE
- Weekly On/Off timer (6 settings per day and 42 per week)
- Wired remote control

EASY INSTALLATION AND MAINTENANCE
- High static pressure units ideal for shops and offices
- Selectable static pressure up to 10 mmAq
- Self-diagnostic function
- Ultra compact indoor unit

SPACE NEEDED FOR INSTALLATION

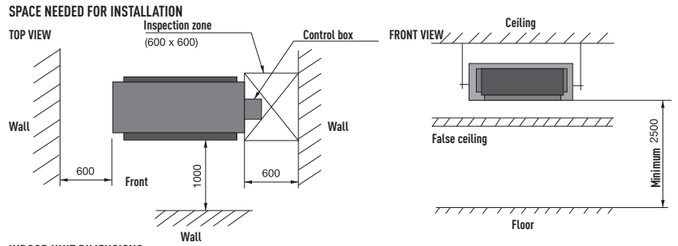

INDOOR UNIT DIMENSIONS

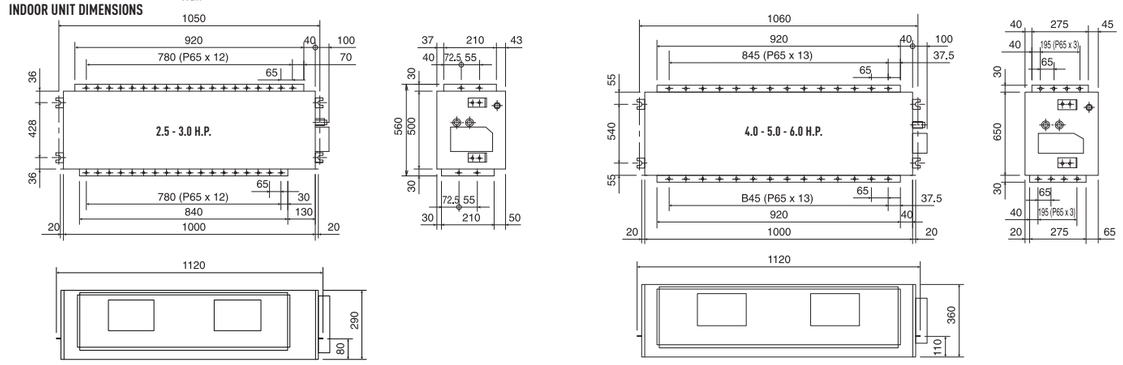

TECHNICAL ZOOM

- HIGHER ENERGY CLASS FOR HIGH SAVINGS, EVEN AT -20°C
- ECO MODE FOR 20% ENERGY SAVING
- WEEKLY TIMER, 42 SETTINGS PER WEEK
- ULTRA COMPACT OUTDOOR UNITS WHICH ARE EASY TO INSTALL
- 30 M MAXIMUM ELEVATION DIFFERENCE
- EASY CHECK MODE FOR FAILURE DETECTION

CEILING // INVERTER + FS TYPE

A complete line up of compact, efficient , quieter and powerful Ceiling, for the most demanding customers, from 2.5 H.P. to 6.0 H.P., Single-phase and three-phase

A class energy saving INVERTER+

prevention allergy filter ALLERU-BUSTER

down to -20°C in heating mode OUTDOOR TEMPERATURE

down to -15°C in cooling mode OUTDOOR TEMPERATURE

OPTIONAL

CZ-RL513T

CZ-RD513C

			2.5 H.P.	3.0 H.P.	4.0 H.P.	4.0 H.P.	5.0 H.P.	5.0 H.P.	6.0 H.P.
KIT			KIT-F24DTE5	KIT-F28DTE5	KIT-F34DTE5	KIT-F34DTE8	KIT-F43DTE5	KIT-F43DTE8	KIT-F50DTE8
Indoor			CS-F24DTE5	CS-F28DTE5	CS-F34DTE5	CS-F34DTE5	CS-F43DTE5	CS-F43DTE5	CS-F50DTE5
Outdoor			CU-L24DBE5	CU-L28DBE5	CU-L34DBE5	CU-L34DBE8	CU-L43DBE5	CU-L43DBE8	CU-L50DBE8
Wireless control	Included with kit		CZ-RL513T	CZ-RL513T	CZ-RL513T	CZ-RL513T	CZ-RL513T	CZ-RL513T	CZ-RL513T
Wired remote control	Optional		CZ-RD513C	CZ-RD513C	CZ-RD513C	CZ-RD513C	CZ-RD513C	CZ-RD513C	CZ-RD513C
Cooling capacity	Nominal (Min-Max)	kW	6.30 (2.00-6.50)	7.10 (2.10-7.50)	10.00 (4.00-12.00)	10.00 (4.00-12.00)	12.50 (4.00-13.50)	12.50 (4.00-13.50)	14.00 (4.00-16.00)
	Nominal (Min-Max)	kCal/h	5,418 (1,720-5,590)	6,106 (1806-6450)	8,600 (3,440-10,320)	8,600 (3,440-10,320)	10,750 (3,440-11,610)	10,750 (3,440-11,610)	12,040 (3,440-13,760)
EER [1]	Nominal (Min-Max)		3.21 (3.64-2.83) A	2.91 (3.23-3.06) C	3.33 (3.20-3.53) A	3.33 (3.20-3.53) A	3.01 (3.08-3.14) C	3.01 (3.08-3.14) C	2.91 (2.96-3.14) C
Power input Cooling	Nominal (Min-Max)	kW	1.96 (0.55-2.30)	2.44 (0.65-2.45)	3.00 (1.25-3.40)	3.00 (1.25-3.40)	4.15 (1.3-4.30)	4.15 (1.3-4.30)	4.81 (1.35-5.10)
Heating capacity	Nominal (Min-Max)	kW	7.10 (2.10-7.50)	8.00 (2.20-8.50)	11.20 (4.00-13.50)	11.20 (4.00-13.50)	14.00 (4.00-15.50)	14.00 (4.00-15.50)	16.0 (4.00-18.00)
	Nominal (Min-Max)	kCal/h	6,106 (1,806-6,450)	6,880 (1,892-7,310)	9,632 (3,440-11,610)	9,632 (3,440-11,610)	12,040 (3,440-13,330)	12,040 (3,440-13,330)	13,760 (3,440-15,480)
COP [1]	Nominal (Min-Max)		3.21 (3.82-2.38) C	3.02 (3.38-2.62) D	3.41 (3.20-3.21) B	3.41 (3.20-3.21) B	3.50 (3.20-3.10) B	3.50 (3.20-3.10) B	3.41 (3.08-3.00) B
Power input Heating	Nominal (Min-Max)	kW	2.21 (0.55-3.15)	2.65 (0.65-3.25)	3.28 (1.25-4.20)	3.28 (1.25-4.20)	4.00 (1.25-5.00)	4.00 (1.25-5.00)	4.69 (1.30-6.00)
Annual Energy Consumption [2]		kWh	980	1,220	1,500	1,500	2,075	2,075	2,405
INDOOR UNIT									
Air Volume	Cooling / Heating	m^3/h	1,020 / 1,020	1,080 / 1,080	1,740 / 1,740	1,740 / 1,740	1,860 / 1,860	1,860 / 1,860	1,920 / 1,920
Moisture removal volume		l/h	3.6	4.2	6.0	6.0	7.9	7.9	9.0
Sound pressure Level [3]	Cooling (Hi / Lo)	dB(A)	43 / 39	45 / 41	47 / 43	47 / 43	49 / 45	49 / 45	50 / 46
	Heating (Hi / Lo)	dB(A)	43 / 39	45 / 41	47 / 43	47 / 43	49 / 45	49 / 45	50 / 46
Sound power Level	Cooling (Hi)	dB	60	62	64	64	66	66	67
	Heating (Hi)	dB	60	62	64	64	66	66	67
Dimensions	Indoor (H x W x D)	mm	210 x 1,245 x 700	210 x 1,245 x 700	250 x 1,600 x 700	250 x 1,600 x 700	250 x 1,600 x 700	250 x 1,600 x 700	250 x 1,600 x 700
Net weight	Indoor	Kg	33	33	43	43	47	47	47
Dust filter			Yes	Yes	Yes	Yes	Yes	Yes	Yes
Antiallergic filter	Optional		CZ-SA12P	CZ-SA12P	CZ-SA12P	CZ-SA12P	CZ-SA12P	CZ-SA12P	CZ-SA12P
OUTDOOR UNIT									
Power source		V	220 - 240	220 - 240	220 - 240	380 - 415	220 - 240	380 - 415	380 - 415
Connection		mm^2	4 x 1'5 to 2'5	4 x 1'5 to 2'5	4 x 1'5 to 2'5	4 x 1'5 to 2'5	4 x 1'5 to 2'5	4 x 1'5 to 2'5	4 x 1'5 to 2'5
Current Cooling	Nominal (Min / Max)	A	8.9	11.1	13.0	4.7	18.8	6.5	7.4
Current Heating	Nominal (Min / Max)	A	10.0	12.0	14.9	5.2	18.2	6.3	7.2
Air Volume	Cooling / Heating	m^3/h	2,880 / 2,880	2,880 / 2,880	5,880 / 5,880	5,880 / 5,880	5,880 / 5880	5,880 / 5,880	5,880 / 5,880
Sound pressure Level [3]	Cooling (Hi)	dB(A)	47	48	52	52	53	53	54
	Heating (Hi)	dB(A)	49	50	54	54	55	55	56
Sound power Level	Cooling (Hi)	dB	63	64	66	66	67	67	68
	Heating (Hi)	dB	65	66	68	68	69	69	70
Dimensions	H x W x D	mm	795 x 900 x 320	795 x 900 x 320	1,340 x 900 x 320	1,340 x 900 x 320	1,340 x 900 x 320	1,340 x 900 x 320	1,340 x 900x 320
Net weight		Kg	71	71	110	110	110	110	105
Piping connections	Liquid pipe	inch (mm)	3/8" (9.52)	3/8" (9.52)	3/8" (9.52)	3/8" (9.52)	3/8" (9.52)	3/8" (9.52)	3/8" (9.52)
	Gas pipe	inch (mm)	5/8" (15.88)	5/8" (15.88)	5/8" (15.88)	5/8" (15.88)	5/8" (15.88)	5/8" (15.88)	5/8" (15.88)
Refrigerant Loading	R410A	Kg	2.13	2.35	3.3	3.3	3.3	3.3	3.5
Elevation difference (in/out) [4]	Max	m	30	30	30	30	30	30	30
Piping length	Min - Max	m	7.5 - 50	7.5 - 50	7.5 - 50	7.5 - 50	7.5 - 50	7.5 - 50	7.5 - 50
Piping length without refrigerent increase	Max	m	30	30	30	30	30	30	30
Additional gas		g/m	50	50	50	50	50	50	50
Area control accessory			EKRORO wire	EKRORO wire	EKRORO wire	EKRORO wire	EKRORO wire	EKRORO wire	EKRORO wire
Operating range [3]	Cooling Min / Max	°C	-15 / 43	-15 / 43	-15 / 43	-15 / 43	-15 / 43	-15 / 43	-15 / 43
	Heating Min / Max	°C	-20 / 24	-20 / 24	-20 / 24	-20 / 24	-20 / 24	-20 / 24	-20 / 24

GLOBAL REMARKS	Rating conditions	Cooling	Heating
	Inside air temperature	27°C DB / 19°C WB	20°C DB
	Outside air temperature	35°C DB / 24°C WB	7°C DB / 6°C WB

DB: Dry bulb, WB: Wet bulb

1) EER, Energy Saving Classification, is at 220 - 240V (380 - 415V) only in accordance with EU directive 2002/31/EC.
2) The annual consumption is calculated by multiplying the input power at 220 - 240V (380 - 415V) by an average of 500-hr per year in cooling mode.
3) The sound pressure Level of the units shows the value measured of a position 1 meter in front of the main body and 1,5 from the ground. The sound pressure is measured in accordance with Eurovent 6/C/006-97 specification.
4) When installing the outdoor unit at a higher position than the indoor unit.

CU-L24DBE5
CU-L28DBE5

CU-L34DBE5 CU-L43DBE8
CU-L34DBE8 CU-L50DBE8
CU-L43DBE5

KIT-F24DTE5 // KIT-F28DTE5 // KIT-F34DTE5 // KIT-F34DTE8 // KIT-F43DTE5 // KIT-F43DTE8 // KIT-F50DTE8

HEALTHY AIR
- Anti-Mould long life air filter
- CZ-SA12P Alleru-buster antiallergic filter (optional)

ENERGY EFFICIENCY AND ECOLOGY
- Maximum efficiency Inverter system
- R410A environmentally friendly refrigerant gas

COMFORT
- Cooling with low outdoor temperatures (down to -20 ºC)
- Automatic start after a power cut
- Automatic fan operation mode
- Soft dry operation mode
- Automatic air deflector system
- Hot start mode
- Super wide air outlet (100 degrees horizontally)

EASE OF USE
- Weekly On/Off timer (6 settings per day and 42 per week)
- Infrared remote control
- Wired remote control optional

EASY INSTALLATION AND MAINTENANCE
- Installation using existing pipes
- Self-diagnostic function
- Condensation control

SPACE NEEDED FOR INSTALLATION

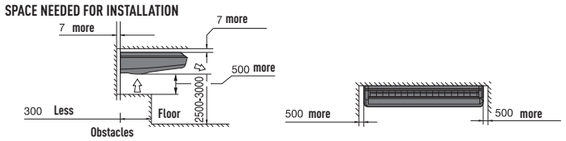

INDOOR UNIT DIMENSIONS CS-F24DTE5 // CS-F28DTE5

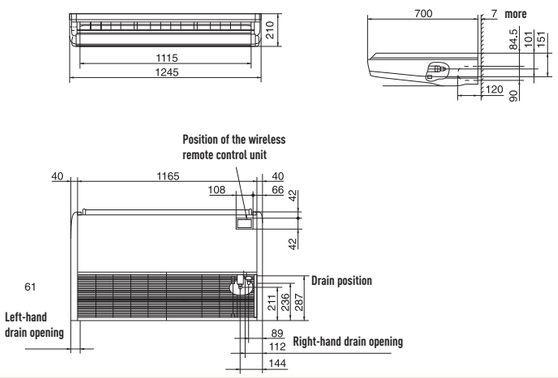

INDOOR UNIT DIMENSIONS CS-F34DTE5 // CS-F43DTE5 // CS-F50DTE5

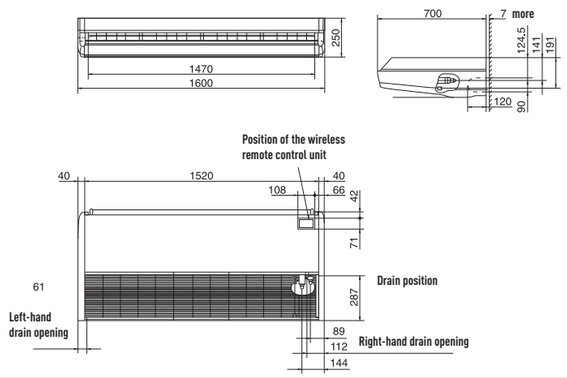

TECHNICAL ZOOM

- ULTRA COMPACT OUTDOOR UNITS (-40% REDUCED SIZE FOR THE CU-YL34HBE5)
- ECO MODE FOR 20% ENERGY SAVING
- WEEKLY TIMER, 42 SETTINGS PER WEEK
- 25 M MAXIMUM ELEVATION DIFFERENCE
- COOLING WITH LOW OUTDOOR TEMPERATURES (DOWN TO -20 ºC)
- EASY CHECK MODE FOR FAILURE DETECTION

CEILING // INVERTER FS TYPE

Compact line up of inverter Ceiling, from 2.5 H.P. to 5.0 H.P., Single-phase

A class energy saving INVERTER

prevention allergy filter ALLERU-BUSTER

down to -20ºC in heating mode OUTDOOR TEMPERATURE

down to -15ºC in cooling mode OUTDOOR TEMPERATURE

OPTIONAL

CZ-RL513T

CZ-RD513C

			2.5 H.P.	3.0 H.P.	4.0 H.P.	5.0 H.P.
KIT			KIT-YH24DTE5	KIT-YH28DTE5	KIT-YH34DTE5	KIT-YH43DTE5
Indoor			CS-F24DTE5	CS-F28DTE5	CS-F34DTE5	CS-F43DTE5
Outdoor			CU-YL24HBE5	CU-YL28HBE5	CU-YL34HBE5	CU-YL43HBE5
Wireless control	Included with kit		CZ-RL513T	CZ-RL513T	CZ-RL513T	CZ-RL513T
Wired remote control	Optional		CZ-RL513C	CZ-RL513C	CZ-RL513C	CZ-RL513C
Cooling capacity	Nominal (Min - Max)	kW	5.60 (2 - 6.30)	7.10 (2.10 - 7.50)	10.00 (3.8 - 10.50)	12.50 (3.80 - 13.00)
	Nominal (Min - Max)	kCal/h	4,816 (1,720 - 5,418)	6,106 (1,806 - 6,450)	8,600 (3,268 - 9,030)	10,750 (3,268 - 11,180)
EER [1]	Nominal (Min - Max)		2.81 (3.03 - 2.68) C	2.81 (3.00 - 2.78) C	2.61 (2.92 - 2.56) D	3.81 (2.92 - 2.77) C
Power input Cooling	Nominal (Min - Max)	kW	1.99 (0.66 - 2.35)	2.53 (0.70 - 2.70)	3.83 (1.30 - 4.10)	4.45 (1.30 - 4.70)
Heating capacity	Nominal (Min - Max)	kW	7.00 (2.10 - 7.50)	8.00 (2.20 - 8.30)	11.20 (3.80 - 12.50)	14.00 (3.80 - 14.50)
	Nominal (Min - Max)	kCal/h	6,020 (1,806 - 6,450)	6,880 (1,892 - 7,138)	9,632 (3,268 - 10,750)	12,040 (3,268 - 12,470)
COP [1]	Nominal (Min - Max)		2.81 (3.82 - 2.54) D	2.81 (3.38 - 2.55) D	3.21 (3.30 - 2.98) C	3.31 (3.39 - 2.90) C
Power input Heating	Nominal (Min - Max)	kW	2.49 (0.55 - 2.95)	2.855 (0.65 - 3.25)	3.49 (1.15 - 4.20)	4.23 (1.12 - 5.00)
Annual Energy Consumption [2]		kWh	995	1,265	1,915	2,225
INDOOR UNIT						
Air Volume	Cooling / Heating	m³/h	1,020 / 1,020	1,080 / 1,080	1,740 / 1,740	1,860 / 1,860
Moisture removal volume		l/h	3.20	4.20	6.00	7.90
Sound pressure Level [3]	Cooling (Hi / Lo)	dB(A)	43 / 39	45 / 41	47 / 43	49 / 45
	Heating (Hi / Lo)	dB(A)	43 / 39	45 / 41	47 / 43	49 / 45
Sound power Level	Cooling (Hi)	dB	60	62	64	66
	Heating (Hi)	dB	60	62	64	66
Dimensions	Indoor (H x W x D)	mm	210 x 1,245 x 700	210 x 1,245 x 700	210 x 1,600 x 700	210 x 1,600 x 700
Net weight	Indoor	Kg	33	33	43	47
Dust filter			Yes	Yes	Yes	Yes
Antiallergic filter	Optional		CZ-SA12P	CZ-SA12P	CZ-SA12P	CZ-SA12P
OUTDOOR UNIT						
Power source		V	220 - 240	220 - 240	220 - 240	220 - 240
Connection		mm²	4 x 1.5 to 2.5	4 x 1.5 to 2.5	4 x 1.5 to 2.5	4 x 1.5 to 2.5
Current Cooling	Nominal (Min / Max)	A	8.9	11.3	17.5	20.3
Current Heating	Nominal (Min / Max)	A	11.2	12.8	16	19.4
Air Volume	Cooling / Heating	m³/h	3,180	3,480	3,720	5,640
Sound pressure Level [3]	Cooling (Hi)	dB(A)	49	50	53	54
	Heating (Hi)	dB(A)	51	52	56	56
Sound power Level	Cooling (Hi)	dB	60	62	64	66
	Heating (Hi)	dB	60	62	64	66
Dimensions	H x W x D	mm	795 x 875+70 [4] x 320	795 x 875+70 [4] x 320	795 x 900 x 320	1,170 x 900 x 320
Net weight		Kg	65	65	66	94
Piping connections	Liquid pipe	inch (mm)	3/8" (9.52)	3/8" (9.52)	3/8" (9.52)	3/8" (9.52)
	Gas pipe	inch (mm)	5/8" (15.88)	5/8" (15.88)	5/8" (15.88)	5/8" (15.88)
Refrigerant Loading	R410A	Kg	1.63	2.05	2.8	2.8
Elevation difference (in/out) [5]	Max	m	25	25	30	30
Piping length	Min - Max	m	7.5 - 30	7.5 - 30	7.5 - 50	7.5 - 50
Piping length without refrigerent increase	Max	m	30	30	30	30
Additional gas		g/m	50	50	50	50
Area control accessory			EKRORO wire	EKRORO wire	EKRORO wire	EKRORO wire
Operating range [3]	Cooling Min / Max	°C	-5 / 43	-5 / 44	-5 / 45	-5 / 46
	Heating Min / Max	°C	-15 / 24	-15 / 25	-15 / 26	-15 / 27

GLOBAL REMARKS	Rating conditions	Cooling	Heating
	Inside air temperature	27°C DB / 19°C WB	20°C DB
	Outside air temperature	35°C DB / 24°C WB	7°C DB / 6°C WB

DB: Dry bulb, WB: Wet bulb

1) EER and COP, Energy Saving Classification, is at 220 - 240V (380 - 415V) only in accordance with EU directive 2002/31/EC.
2) The annual consumption is calculated by multiplying the input power at 220 - 240V (380 - 415V) by an average of 500-hr per year in cooling mode.
3) The sound pressure Level of the units shows the value measured of a position 1 meter in front of the main body and 1,5 from the ground. The sound pressure is measured in accordance with Eurovent 6/C/006-97 specification.
4) Add 70mm for piping port.
5) When installing the outdoor unit at a higher position than the indoor unit.

CU-YL24HBE5
CU-YL28HBE5

CU-YL34HBE5

CU-YL43HBE5

KIT-YH24DTE5 // KIT-YH28DTE5 // KIT-YH34DTE5 // KIT-YH43DTE5

HEALTHY AIR
- Anti-Mould long life air filter
- CZ-SA12P Alleru-buster antiallergic filter (optional)

ENERGY EFFICIENCY AND ECOLOGY
- Inverter system
- R410A environmentally friendly refrigerant gas

COMFORT
- Cooling with low outdoor temperatures (down to -15 ºC)
- Automatic start after a power cut
- Automatic fan operation mode
- Soft dry operation mode
- Automatic air deflector system
- Hot start mode
- Super wide air outlet (100 degrees horizontally)

EASE OF USE
- Weekly On/Off timer (6 settings per day and 42 per week)
- Infrared remote control
- Optional wired remote control

EASY INSTALLATION AND MAINTENANCE
- Installation using existing pipes (only for YL*HBE5 units)
- Self-diagnostic function
- Condensation control

SPACE NEEDED FOR INSTALLATION

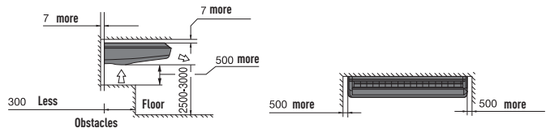

INDOOR UNIT DIMENSIONS CS-F24DTE5 // CS-F28DTE5

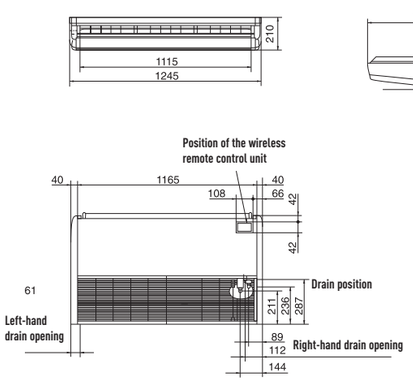

INDOOR UNIT DIMENSIONS CS-F34DTE5 // CS-F43DTE5

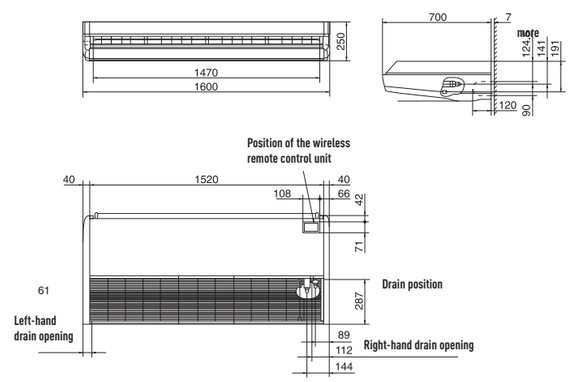

TECHNICAL ZOOM

- ECO MODE FOR 20% ENERGY SAVING
- WEEKLY TIMER, 42 SETTINGS PER WEEK
- 30 M MAXIMUM ELEVATION DIFFERENCE
- EASY CHECK MODE FOR FAILURE DETECTION

CEILING // HEAT PUMP FS TYPE

Full line up of heat pump non-inverter Ceiling, from 2 H.P. to 6.0 H.P., Single-phase and three-phase

prevention allergy filter — ALLERU-BUSTER
down to -10°C in cooling mode — OUTDOOR TEMPERATURE
down to -10°C in heating mode — OUTDOOR TEMPERATURE

OPTIONAL

CZ-RL513T

CZ-RD513C

			2.0 H.P.	2.5 H.P.	3.0 H.P.	3.0 H.P.	4.0 H.P.	4.0 H.P.	5.0 H.P.	6.0 H.P.
KIT			KIT-F18DTE5-C	KIT-F24DTE5-C	KIT-F28DTE5-C	KIT-F28DTE8-C	KIT-F34DTE5-C	KIT-F34DTE8-C	KIT-F43DTE8-C	KIT-F50DTE8-C
Indoor			CS-F18DTE5	CS-F24DTE5	CS-F28DTE5	CS-F28DTE5	CS-F34DTE5	CS-F34DTE5	CS-F43DTE5	CS-F50DTE5
Outdoor			CU-B18DBE5	CU-B24DBE5	CU-B28DBE5	CU-B28DBE8	CU-B34DBE5	CU-B34DBE8	CU-B43DBE8	CU-B50DBE8
Wireless control	Included with kit		CZ-RL513T	CZ-RL513T	CZ-RL513T	CZ-RL513T	CZ-RL513T	CZ-RL513T	CZ-RL513T	CZ-RL513T
Wired remote control	Optional		CZ-RD513C	CZ-RD513C	CZ-RD513C	CZ-RD513C	CZ-RD513C	CZ-RD513C	CZ-RD513C	CZ-RD513C
Cooling capacity	Nominal (Min-Max)	kW	5.00	6.60	7.30	7.30	10.00	10.00	12.50	13.50
	Nominal (Min-Max)	kCal/h	4,300	5,676	6,278	6,278	8,600	8,600	10,750	11,610
EER [1]	Nominal (Min-Max)		2.76 D	2.57 E	2.56 E	2.56 E	2.56 D	2.65 D	2.63 D	2.62 E
Power input Cooling	Nominal (Min-Max)	kW	1.81 (1.75-1.84)	2.57 (2.51-2.63)	2.85 (2.8-2.9)	2.85 (2.8-2.9)	3.66 (3.85-3.95)	3.77 (3.72-3.82)	4.75 (4.7-4.8)	5.16 (5.11-5.28)
Heating capacity	Nominal (Min-Max)	kW	5.60	7.10	7.80	7.80	11.20	11.20	14.00	15.00
	Nominal (Min-Max)	kCal/h	4,816	6,106	6,708	6,708	9,632	9,632	12,040	12,900
COP [1]	Nominal (Min-Max)		3.22 C	2.85 D	2.84 D	2.84 D	2.81 E	2.86 E	2.99 D	2.98 D
Power input Heating	Nominal (Min-Max)	kW	1.74 (1.71-1.77)	2.49 (2.44-2.62)	2.75 (2.7-2.8)	2.75 (2.7-2.8)	3.99 (3.94-4.04)	3.91 (3.86-3.96)	4.69 (4.64-4.74)	5.03 (4.98-5.08)
Annual Energy Consumption [2]		kWh	905	1285	1425	1425	1950	1885	2375	2580
INDOOR UNIT										
Air Volume	Cooling / Heating	m³/h	840 / 840	1,020 / 1,020	1,080 / 1,080	1,080 / 1,080	1,740 / 1,740	1,740 / 1,740	1,860 / 1,860	1,920 / 1,920
Moisture removal volume		l/h	2.8	3.8	4.3	4.3	6.0	6.0	7.9	8.6
Sound pressure Level [3]	Cooling (Hi / Lo)	dB(A)	41 / 37	43 / 39	45 / 41	45 / 41	47 / 43	47 / 43	49 / 45	50 / 46
	Heating (Hi / Lo)	dB(A)	41 / 37	43 / 39	45 / 41	45 / 41	47 / 43	47 / 43	49 / 45	50 / 46
Sound power Level	Cooling (Hi)	dB	58	60	62	62	64	64	66	67
	Heating (Hi)	dB	58	60	62	62	64	64	66	67
Dimensions	Indoor (H x W x D)	mm	210 x 1,245 x 700	210 x 1,245 x 700	210 x 1,245 x 700	210 x 1,245 x 700	250 x 1,600 x 700	250 x 1,600 x 700	250 x 1,600 x 700	250 x 1,600 x 700
Net weight	Indoor	Kg	33	33	33	33	43	43	47	47
Dust filter			Yes	Yes	Yes	Yes	Yes	Yes	Yes	Yes
Antiallergic filter	Optional		CZ-SA12P	CZ-SA12P	CZ-SA12P	CZ-SA12P	CZ-SA12P	CZ-SA12P	CZ-SA12P	CZ-SA12P
OUTDOOR UNIT										
Power source		V	220 - 240	220 - 240	220 - 240	380 - 415	220 - 240	380 - 415	380 - 415	380 - 415
Connection		mm²	4 x 1'5 to 2'5	4 x 1'5 to 2'5	4 x 1'5 to 2'5	4 x 1'5 to 2'5	4 x 1'5 to 2'5	4 x 1'5 to 2'5	4 x 1'5 to 2'5	4 x 1'5 to 2'5
Current Cooling	Nominal (Min / Max)	A	8.1	12.6	12.9	4.9	18.2	6.1	8.0	8.6
Current Heating	Nominal (Min / Max)	A	7.75	12.6	13.0	4.7	18.2	6.4	7.8	8.0
Air Volume	Cooling / Heating	m³/h	3,420	3,600	3,780	3,780	5,640	5,640	5,640	5,760
Sound pressure Level [3]	Cooling (Hi)	dB(A)	49	50	52	52	55	55	56	56
	Heating (Hi)	dB(A)	50	51	53	53	56	56	57	57
Sound power Level	Cooling (Hi)	dB	65	66	67	67	69	69	70	70
	Heating (Hi)	dB	66	67	68	68	70	70	71	71
Dimensions	H x W x D	mm	795 x 900 x 320	795 x 900 x 320	795 x 900 x 320	795 x 900 x 320	1,170 x 900 x 320	1,170 x 900 x 320	1,170 x 900 x 320	1,170 x 900 x 320
Net weight		Kg	57	69	69	69	102	100	102	102
Piping connections	Liquid pipe	inch (mm)	1/4" (6.35)	3/8" (9.52)	3/8" (9.52)	3/8" (9.52)	3/8" (9.52)	3/8" (9.52)	3/8" (9.52)	3/8" (9.52)
	Gas pipe	inch (mm)	1/2" (12.70)	5/8" (15.88)	5/8" (15.88)	5/8" (15.88)	5/8" (15.88)	5/8" (15.88)	5/8" (15.88)	5/8" (15.88)
Refrigerant Loading	R410A	Kg	1.35	1.7	2.05	2.05	2.7	2.7	3.1	3.4
Elevation difference (in/out) [4]	Max	m	20	30	30	30	30	30	30	30
Piping length	Min - Max	m	7.5 - 30	7.5 - 50	7.5 - 50	7.5 - 50	7.5 - 50	7.5 - 50	7.5 - 50	7.5 - 50
Piping length without refrigerent increase	Max	m	20	30	30	30	30	30	30	30
Additional gas		g/m	20	50	50	50	50	50	50	50
Area control accessory			EKRORO wire	EKRORO wire	EKRORO wire	EKRORO wire	EKRORO wire	EKRORO wire	EKRORO wire	EKRORO wire
Operating range [3]	Cooling Min / Max	°C	-10 / 43	-10 / 43	-10 / 43	-10 / 43	-10 / 43	-10 / 43	-10 / 43	-10 / 43
	Heating Min / Max	°C	-10 / 24	-10 / 24	-10 / 24	-10 / 24	-10 / 24	-10 / 24	-10 / 24	-10 / 24

GLOBAL REMARKS	Rating conditions	Cooling	Heating
	Inside air temperature	27°C DB / 19°C WB	20°C DB
	Outside air temperature	35°C DB / 24°C WB	7°C DB / 6°C WB

DB: Dry bulb, WB: Wet bulb

1) EER and COP, Energy Saving Classification, is at 220 - 240V (380 - 415V) in accordance with EU directive 2002/31/EC.
2) The annual consumption is calculated by multiplying the input power at 220 - 240V (380 - 415V) by an average of 500-hr per year in cooling mode.
3) The sound pressure Level of the units shows the value measured of a position 1 meter in front of the main body and 1,5 from the ground. The sound pressure is measured in accordance with Eurovent 6/C/006-97 specification.
4) When installing the outdoor unit at a higher position than the indoor unit.

KIT-F18DTE5-C // KIT-F24DTE5-C // KIT-F28DTE5-C // KIT-F28DTE8-C // KIT-F34DTE5-C // KIT-F34DTE8-C // KIT-F43DTE8-C // KIT-F50DTE8-C

CU-B18DBE5 CU-B28DBE5
CU-B24DBE5 CU-B28DBE8

CU-B34DBE5 CU-B43DBE8
CU-B34DBE8 CU-B50DBE8

HEALTHY AIR
- Anti-Mould long life air filter
- CZ-SA12P Alleru-buster antiallergic filter (optional)

ENERGY EFFICIENCY AND ECOLOGY
- R410A environmentally friendly refrigerant gas

COMFORT
- Automatic start after a power cut
- Automatic fan operation mode
- Soft dry operation mode
- Automatic air deflector system
- Hot start mode
- Super wide air outlet (100 degrees horizontally)

EASE OF USE
- Weekly On/Off timer (6 settings per day and 42 per week)
- Infrared remote control
- Optional wired remote control

EASY INSTALLATION AND MAINTENANCE
- Self-diagnostic function
- Condensation control

SPACE NEEDED FOR INSTALLATION

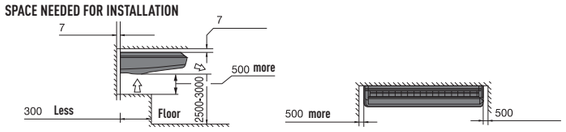

INDOOR UNIT DIMENSIONS CS-F18DTE5 // CS-F24DTE5 // CS-F28DTE5

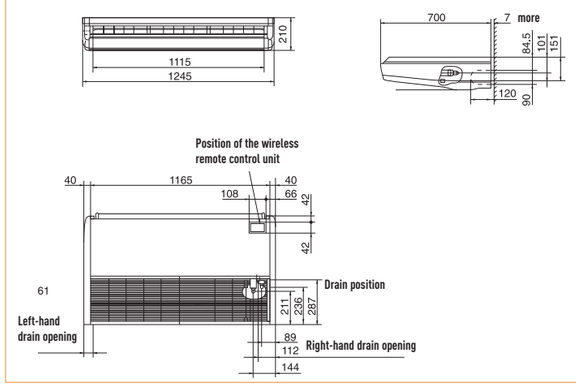

INDOOR UNIT DIMENSIONS CS-F34DTE5 // CS-F43DTE5 // CS-F50DTE5

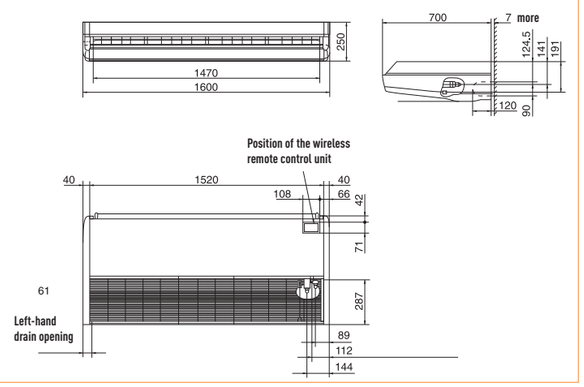

TECHNICAL ZOOM

- ECO MODE FOR 20% ENERGY SAVING
- WEEKLY TIMER, 42 SETTINGS PER WEEK
- 30 M MAXIMUM ELEVATION DIFFERENCE
- EASY CHECK MODE FOR FAILURE DETECTION

CEILING // COOLING ONLY FS TYPE

Full line up of cooling only non-inverter Ceiling, from 2 H.P. to 6.0 H.P., Single-phase and three-phase

prevention allergy filter
ALLERU-BUSTER

down to -10°C in cooling mode
OUTDOOR TEMPERATURE

OPTIONAL

CZ-RL513T

CZ-RD513C

			2.0 H.P.	2.5 H.P.	2.5 H.P.	3.0 H.P.	3.0 H.P.	4.0 H.P.	4.0 H.P.	5.0 H.P.	6.0 H.P.
KIT			KIT-F18DTE5-F	KIT-F24DTE5-F	KIT-F24DTE8-F	KIT-F28DTE5-F	KIT-F28DTE8-F	KIT-F34DTE5-F	KIT-F34DTE8-F	KIT-F43DTE8-F	KIT-F50DTE8-F
Indoor			CS-F18DTE5	CS-F24DTE5	CS-F24DTE5	CS-F28DTE5	CS-F28DTE5	CS-F34DTE5	CS-F34DTE5	CS-F43DTE5	CS-F50DTE5
Outdoor			CU-J18DBE5	CU-J24DBE5	CU-J24DBE8	CU-J28DBE5	CU-J28DBE8	CU-J34DBE5	CU-J34DBE8	CU-J43DBE8	CU-J50DBE8
Wireless control	Included with kit		CZ-RL513T	CZ-RL513T	CZ-RL513T	CZ-RL513T	CZ-RL513T	CZ-RL513T	CZ-RL513T	CZ-RL513T	CZ-RL513T
Wired remote control	Optional		CZ-RD513C	CZ-RD513C	CZ-RD513C	CZ-RD513C	CZ-RD513C	CZ-RD513C	CZ-RD513C	CZ-RD513C	CZ-RD513C
Cooling capacity	Nominal (Min-Max)	kW	5.00	6.60	6.60	7.30	7.30	10.00	10.00	12.50	13.50
	Nominal (Min-Max)	kCal/h	4,300	5,676	5,676	6,278	6,278	8,600	8,600	10,750	11,610
EER [1]	Nominal (Min-Max)		2.76 D	2.51 E	2.51 E	2.56 E	2.56 E	2.49 E	2.57 E	2.56 E	2.56 E
Power input Cooling	Nominal (Min-Max)	kW	1.81 (1.75-1.84)	2.63 (2.58-2.68)	2.63 (2.58-2.68)	2.85 (2.8-2.9)	2.85 (2.8-2.9)	4.02 (3.97-4.07)	3.99 (3.84-3.94)	3.99 (3.84-3.94)	5.28 (5.23-5.33)
Annual Energy Consumption [2]		kWh	905	1.315	1.315	1.425	1.425	2.010	1.945	2.445	2.640
INDOOR UNIT											
Air Volume		m^3/h	840	1,020	1,020	1,080	1,080	1,740	1,740	1,860	1,920
Moisture removal volume		l/h	2.8	3.8	3.8	4.3	4.3	6.0	6.0	7.9	8.6
Sound pressure Level [3]	Hi / Lo	dB(A)	41 / 37	43 / 39	43 / 39	45 / 41	45 / 41	47 / 43	47 / 43	49 / 45	50 / 46
Sound power Level	Hi	dB	58	60	60	62	62	64	64	66	67
Dimensions	Indoor (H x W x D)	mm	210x1,245x700	210x1,245x700	210x1,245x700	210x1,245x700	210x1,245x700	250x1,600x700	250x1,600x700	250x1,600x700	250x1,600x700
Net weight	Indoor	Kg	33	33	33	33	33	43	43	47	47
Dust filter			Yes	Yes	Yes	Yes	Yes	Yes	Yes	Yes	Yes
Antiallergic filter	Optional		CZ-SA12P	CZ-SA12P	CZ-SA12P	CZ-SA12P	CZ-SA12P	CZ-SA12P	CZ-SA12P	CZ-SA12P	CZ-SA12P
OUTDOOR UNIT											
Power source		V	220 - 240	220 - 240	380 - 415	220 - 240	380 - 415	220 - 240	380 - 415	380 - 415	380 - 415
Connection		mm^2	4 x 1'5 to 2'5	4 x 1'5 to 2'5	4 x 1'5 to 2'5	4 x 1'5 to 2'5	4 x 1'5 to 2'5	4 x 1'5 to 2'5	4 x 1'5 to 2'5	4 x 1'5 to 2'5	4 x 1'5 to 2'5
Current Cooling	Nominal (Min / Max)	A	8.1	13.3	4.6	13	4.95	18.5	6.1	8.2	8.6
Air Volume		m^3/h	3,420	3,600	3,600	3,780	3,780	5,640	5,640	5,640	5,760
Sound pressure Level [3]	Hi	dB(A)	49	50	50	52	52	55	55	56	56
Sound power Level	Hi	dB	65	66	66	67	67	69	69	70	70
Dimensions	H x W x D	mm	795x900x320	795x900x320	795x900x320	795x900x320	795x900x320	1,170x900x320	1,170x900x320	1,170x900x320	1,170x900x320
Net weight		Kg	57	69	69	69	69	102	100	102	102
Piping connections	Liquid pipe	inch (mm)	1/4" (6.35)	3/8" (9.52)	3/8" (9.52)	3/8" (9.52)	3/8" (9.52)	3/8" (9.52)	3/8" (9.52)	3/8" (9.52)	3/8" (9.52)
	Gas pipe	inch (mm)	1/2" (12.70)	5/8" (15.88)	5/8" (15.88)	5/8" (15.88)	5/8" (15.88)	5/8" (15.88)	5/8" (15.88)	5/8" (15.88)	5/8" (15.88)
Refrigerant Loading	R410A	Kg	1.35	1.7	1.7	2.05	2.05	2.7	2.7	3.1	3.4
Elevation difference (in/out) [4]	Max	m	20	30	30	30	30	30	30	30	30
Piping length	Min - Max	m	7.5 - 30	7.5 - 50	7.5 - 50	7.5 - 50	7.5 - 50	7.5 - 50	7.5 - 50	7.5 - 50	7.5 - 50
Piping length without refrigerent increase	Max	m	20	30	30	30	30	30	30	30	30
Additional gas		g/m	50	50	50	50	50	50	50	50	50
Area control accessory			EKRORO wire	EKRORO wire	EKRORO wire	EKRORO wire	EKRORO wire	EKRORO wire	EKRORO wire	EKRORO wire	EKRORO wire
Operating range [3]	Min / Max	°C	-10 / 43	-10 / 43	-10 / 43	-10 / 43	-10 / 43	-10 / 43	-10 / 43	-10 / 43	-10 / 43

GLOBAL REMARKS	Rating conditions	Cooling
	Inside air temperature	27°C DB / 19°C WB
	Outside air temperature	35°C DB / 24°C WB

DB: Dry bulb, WB: Wet bulb

1) EER, Energy Saving Classification, is at 220 - 240V (380 - 415V) only in accordance with EU directive 2002/31/EC.
2) The annual consumption is calculated by multiplying the input power at 220 - 240V (380 - 415V) by an average of 500-hr per year in cooling mode.
3) The sound pressure Level of the units shows the value measured of a position 1 meter in front of the main body and 1,5 from the ground. The sound pressure is measured in accordance with Eurovent 6/C/006-97 specification.
4) When installing the outdoor unit at a higher position than the indoor unit.

CU-J18DBE5 CU-J28DBE5
CU-J24DBE5 CU-J28DBE8
CU-J24DBE8

CU-J34DBE5 CU-J43DBE8
CU-J34DBE8 CU-J50DBE8

KIT-F18DTE5-F // KIT-F24DTE5-F // KIT-F28DTE8-F // KIT-F28DTE5-F // KIT-F28DTE8-F // KIT-F34DTE5-F // KIT-F34DTE8-F // KIT-F43DTE8-F // KIT-F50DTE8-F

HEALTHY AIR
- Anti-Mould long life air filter
- CZ-SA12P Alleru-buster antiallergic filter (optional)

ENERGY EFFICIENCY AND ECOLOGY
- R410A environmentally friendly refrigerant gas

COMFORT
- Automatic start after a power cut
- Automatic fan operation mode
- Soft dry operation mode
- Automatic air deflector system
- Hot start mode
- Super wide air outlet (100 degrees horizontally)

EASE OF USE
- Weekly On/Off timer (6 settings per day and 42 per week)
- Infrared remote control
- Optional wired remote control

EASY INSTALLATION AND MAINTENANCE
- Self-diagnostic function
- Condensation control

SPACE NEEDED FOR INSTALLATION

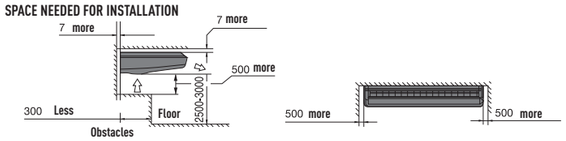

INDOOR UNIT DIMENSIONS CS-F18DTE5 // CS-F24DTE5 // CS-F28DTE5

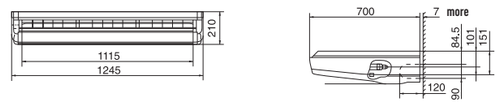

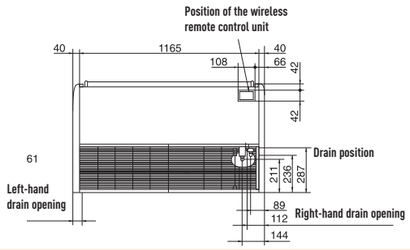

INDOOR UNIT DIMENSIONS CS-F34DTE5 // CS-F43DTE5 // CS-F50DTE5

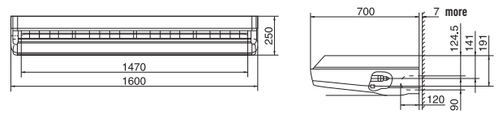

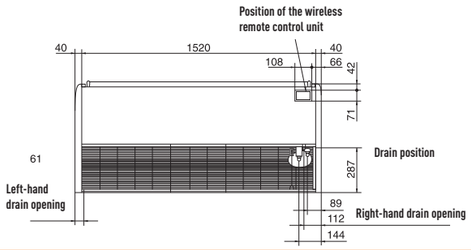

TECHNICAL ZOOM

- HIGH EFFICIENCY INVERTER SYSTEM
- COOLING WITH LOW OUTDOOR TEMPERATURES (DOWN TO -15 ºC)
- MAXIMUM PIPE LENGTH 100M (MORE THAN 40% LONGER THAN OTHER SPLIT SYSTEMS)
- MULTIFUNCTIONAL WIRELESS REMOTE CONTROL WITH BUILT-IN TEMPERATURE CONTROL
- FRESH AIR KNOCKOUT FOR IMPROVED AIR QUALITY

HIGH STATIC PRESSURE HIDE AWAY 8-10 H.P. // 3 PHASE INVERTER TYPE

Powerful performance in a compact space Panasonic breaks new ground in offering high-performance and power in a small space. The 8-10 HP from Panasonic is ideally suited for large retail applications and other large areas not needing the higher capacities of VRF systems. The lightweight and compact design enables easier installation in any commercial space. The twin fan system saves valuable footprint compared to traditional 8-10HP systems which have a larger footprint design.

down to -20ºC in heating mode OUTDOOR TEMPERATURE

down to -15ºC in cooling mode OUTDOOR TEMPERATURE

			8.0 H.P.	10.0 H.P.
KIT			KIT-200PE1E8	KIT-250PE1E8
Indoor			S-200PE1E8	S-250PE1E8
Outdoor			U-200PE1E8	U-250PE1E8
Remote control (optional)			CZ-RTC2 / CZ-RWSC2 / CZ-RE2C2	CZ-RTC2 / CZ-RWSC2 / CZ-RE2C2
Cooling capacity	Nominal (Min - Max)	kW	20.2 (6.0 - 22.4)	25.0 (6.0 - 28.0)
EER [1]	Nominal	W	2.81	2.62
Power input Cooling	Nominal	W	7.12	9.55
Running amperes		A	11.0	14.8
Heating capacity	Nominal (Min - Max)	kW	22.4 (6.0 - 25.0)	28.0 (6.0 - 31.5)
COP [1]	Nominal	W	3.45	3.41
Power input Heating	Nominal	W	6.50	8.20
Running amperes		A	10.1	12.6
Annual Energy Consumption [2]		kWh	3115	4290
INDOOR UNIT				
Power source		V / ph / Hz	220 - 240 / 1 / 50/60	220 - 240 / 1 / 50/60
External static pressure (booster)		Pa	176	216 (235)
Air volume	(H/M/L)	m^3/h	3360 / 3190 / 2980	4320 / 4200 / 3960
Moisture removal volume	Cooling	L/h	11.1	13.9
Sound pressure Level [3]	(H/M/L)	dB(A)	48 / 47 / 46	51 / 50 / 49
Sound power Level		dB(A)	80	82
Dimensions	H x W x D	mm	467 / 1428 / 1230	467 / 1428 / 1230
Net weight	Indoor	Kg	110	120
OUTDOOR UNIT				
Power source		V / ph / Hz	380 - 415 / 3+N / 50/60	380 - 415 / 3+N / 50/60
Air Volume	Cooling / Heating	m^3/h	10,500	10,500
Sound pressure Level [3]	Cooling (Hi)	dB(A)	57	57
	Heating (Hi)	dB(A)	57	58
Sound power Level	(Hi)	dB	71	72
Dimensions	H x W x D	mm	1,526 x 940 x 340	1,526 x 940 x 340
Net weight		Kg	118	128
REFRIGERANT CIRCUIT				
Tube diameter Narrow/Wide		mm (in)	9.52 (3/8) / 25.4 (1)	12.7 (1/2) / 25.4 (1)
Max piping lenght		m	100	100
Max elevation difference - O.U. above/below I.U.		m	30	30
Chargeless piping lenght		m	30	30
Amount of additional refrigerant		g/m	40	80
Piping connections	Liquid pipe	mm (in)	9.52 (3/8)	12.7 (1/2)
	Gas pipe	mm (in)	25.4 (1)	25.4 (1)
Refrigerant Loading			R410A	R410A
Elevation difference (in/out) [4]	Max	m	30	30
Piping length	Min - Max	m	5 - 100	5 - 100
Piping length without refrigerent increase	Max	m	30	30
Additional gas		g/m	40	80
Operating range	Cooling Min / Max	°C	-15 / 43	-15 / 43
	Heating Min / Max	°C	-20 / 15	-20 / 15

GLOBAL REMARKS	Rating conditions	Cooling	Heating
	Inside air temperature	27°C DB / 19°C WB	20°C DB
	Outside air temperature	35°C DB / 24°C WB	7°C DB / 6°C WB

DB: Dry bulb, WB: Wet bulb

Specifications subject to change without notice.
1) EER and COP, Energy Saving Classification, is at 220 - 240V (380 - 415V) only in accordance with EU directive 2002/31/EC.
2) The annual consumption is calculated by multiplying the input power at 220 - 240V (380 - 415V) by an average of 500-hr per year in cooling mode.
3) The sound pressure Level of the units shows the value measured of a position 1 meter in front of the main body and 1,5 from the ground. The sound pressure is measured in accordance with Eurovent 6/C/006-97 specification.
4) When installing the outdoor unit at a higher position than the indoor unit.

U-200PE1E8
U-250PE1E8

KIT-200PE1E8 // KIT-250PE1E8

ENERGY EFFICIENCY AND ECOLOGY
- Maximum efficiency Inverter system
- R410A environmentally friendly refrigerant gas

COMFORT
- Cooling with low outdoor temperatures (down to -15 ºC)
- Selection of temperature sensor at indoor unit or wired remote control

EASE OF USE
- Weekly On/Off timer (6 settings per day and 42 per week)
- Selection of wired / Wireless and simplified wired remote controller

EASY INSTALLATION AND MAINTENANCE
- High static pressure units ideal for shops and offices

SYSTEM EXAMPLE
An inspection port (450 x 450mm or more) is required at the lower side of the indoor unit body. Distributor (field supply)

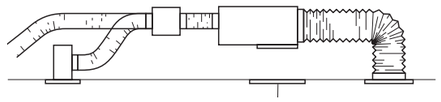

Inspection port (450 x 450mm or more)

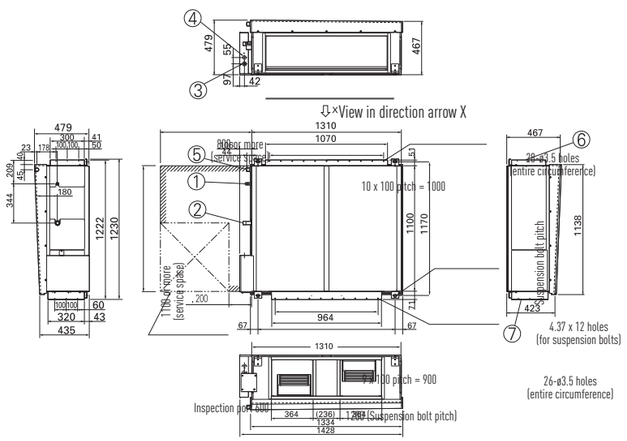

1	Refrigerant piping (liquid pipes) ø9.52
2	Refrigerant piping (gas pipes) 76 type: ø19.05, 96 type: ø22.22
3	Power supply outlet (ø25 grommet, rubber)
4	Power supply outlet (spare) (ø30 knock-out)
5	Drain port 25A, male thread
6	Duct connection for suction
7	Duct connection for discharge

TWIN FLEXI SYSTEM FS // INVERTER + // INVERTER // HEAT PUMP // COOLING ONLY FS

Panasonic's FS units can be installed as Twin systems (two indoor units of the same type with one outdoor unit). The indoor units can be combined in any of the different available ratings (1.5 H.P., 2 H.P., 2.5 H.P. and 3 H.P.).
The total power of indoor units will coincide with the power of the outdoor unit in all cases so that their operation will always be simultaneous*. The outdoor units are available in ratings of 3 H.P., 4 H.P., 5 H.P. and 6 H.P.

*** Simultaneous operation of indoor units in all cases.**

COMPATIBLE INDOOR UNITS

CS-F14DB4E5 / CS-F18DB4E5
CS-F24DB4E5 / CS-F28DB4E5

CS-F18DTE5 / CS-F24DTE5 / CS-F28DTE5

CS-F14DD3E5 / CS-F18DD3E5
CS-F24DD3E5 / CS-F28DD3E5

CS-F24DD2E5 / CS-F28DD2E5

COMPATIBLE OUTDOOR UNITS

CU-J28DBE5/8

CU-B28DBE5/8

CU-L28DBE5

CU-YL28HBE5
CU-YL34HBE5

CU-J34DBE5/8
CU-J43DBE8
CU-J50DBE8

CU-B34DBE5/8
CU-B43DBE8
CU-B50DBE8

CU-L34DBE5/8
CU-L43DBE5/8
CU-L50DBE8

CU-YL43HBE5

TABLE OF TWIN COMBINATIONS

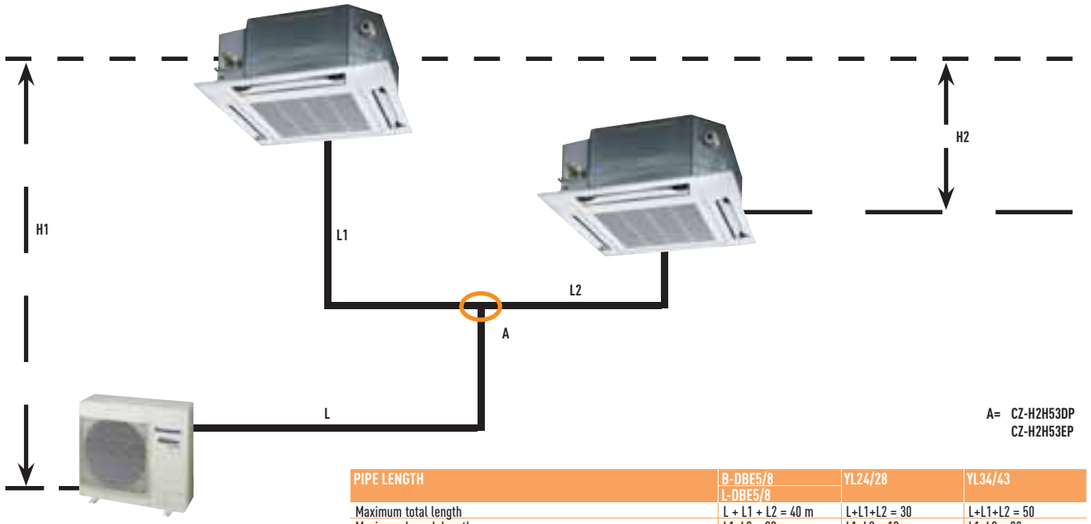

PIPE LENGTH	B-DBE5/8 L-DBE5/8	YL24/28	YL34/43
Maximum total length	L + L1 + L2 = 40 m	L+L1+L2 = 30	L+L1+L2 = 50
Maximum branch length	L1, L2 = 20 m	L1, L2 = 10 m	L1, L2 = 20 m
Maximum difference in branch lengths	L1 – L2 = 10 m	L1 - L2 = 5 m	L1 - L2 = 10 m
Maximum gradient between the outdoor unit and the indoor unit	H1 = 30 m (20 m*)	H1 = 25 m (20 m)	H1 = 30 m (20 m)
Maximum gradient between indoor units	H2 = 0.5 m	H2 = 0.5 m	H2 = 0.5 m

* If the outdoor unit is below the indoor units.

TABLE OF COMBINATIONS FOR FS HEAT PUMP // FS INVERTER +

OUTDOOR UNIT	STANDARD TWIN		DIVERTER	OUTDOOR UNIT	STANDARD TWIN		DIVERTER
3.0 H.P. (CU-28)	3.0 H.P. (CU-28)	1.5 H.P. (CS-14) 1.5 H.P. (CS-14)	CZ-H2H53DP	5.0 H.P. (CU-43)	5.0 H.P. (CU-43)	2.5 H.P. (CS-24) 2.5 H.P. (CS-24)	CZ-H2H53EP
4.0 H.P. (CU-34)	4.0 H.P. (CU-34)	2.0 H.P. (CS-18) 2.0 H.P. (CS-18)	CZ-H2H53DP	6.0 H.P. (CU-50)	6.0 H.P. (CU-50)	3.0 H.P. (CS-28) 3.0 H.P. (CS-28)	CZ-H2H53EP

COMPATIBLE INDOOR UNITS

			(14) 1,5 H.P.	(18) 2,0 H.P.	(24) 2,5 H.P.	(28) 3,0 H.P.
SPLIT CASSETTE TYPE			CS-F14DB4E5	CS-F18DB4E5	CS-F24DB4E5	CS-F28DB4E5
Panel			CZ-BT03P	CZ-BT03P	CZ-BT03P	CZ-BT03P
Power input	Cooling	kW - kcal/h	3.8 - 3,268	5.0 - 4,300	6.6 - 5,676	7.3 - 6,278
	Heating	kW - kcal/h	4.3 - 3,698	5.6 - 4,816	7.1 - 6,106	8.0 - 6,880
Dimensions	Indoor	H x W x D (mm)	246 x 840 x 840	246 x 840 x 840	246 x 840 x 840	246 x 840 x 840
	Panel	H x W x D (mm)	30 x 950 x 950	30 x 950 x 950	30 x 950 x 950	30 x 950 x 950
Sound pressure Level		dB(A)	31	32	32	36
Air Volume		m³/h	900	960	1,080	1,200
SPLIT CEILING TYPE			—	CS-F18DTE5	CS-F24DTE5	CS-F28DTE5
Power input	Cooling	kW - kcal/h	—	5.0 - 4,300	6.6 - 5,676	7.3 - 6,278
	Heating	kW - kcal/h	—	5.6 - 4,816	7.1 - 6,106	7.8 - 6,708
Dimensions	H x W x D	mm	—	210 x 1,245 x 700	210 x 1,245 x 700	210 x 1,245 x 700
Sound pressure Level		dB(A)	—	34	39	41
Air Volume		m³/h	—	840	1,020	1,080
LOW STATIC PRESSURE HIDE-AWAY TYPE			CS-F14DD3E5	CS-F18DD3E5	CS-F24DD3E5	CS-F28DD3E5
Power input	Cooling	kW - kcal/h	3.8 - 3,268	5.0 - 4,300	6.6 - 5,676	7.3 - 6,278
	Heating	kW - kcal/h	4.3 - 3,698	5.6 - 4,816	7.1 - 6,106	8.0 - 6,880
Dimensions	H x W x D	mm	270 x 780+100 x 650	270 x 780+100 x 650	270 x 1,000+100 x 650	270 x 1,000+100 x 650
Sound pressure Level		dB(A)	35	38	43	43
Air Volume		m³/h	900	1,020	1320	1,320
HIGH PRESSURE HIDE-AWAY TYPE			—	—	CS-F24DD2E5	CS-F28DD2E5
Power input	Cooling	kW - kcal/h	—	—	6.6 - 5,676	7.10 - 6,106
	Heating	kW - kcal/h	—	—	7.1 - 6,106	8.00 - 6,880
Dimensions	H x W x D	mm	—	—	290 x 1,000+100 x 500	290 x 1,000+100 x 500
Sound pressure Level		dB(A)	—	—	41	44
Air Volume		m³/h	—	—	1,320	1,320

OUTDOOR UNITS

INVERTER + FS			CU-L28DBE5 I	CU-L34DBE5 I	CU-L43DBE5 I	CU-L50DBE5 III
Power input		kW - kcal/h	7,10 - 6.106	10,00 - 8.600	12,50 - 10.750	14,00 - 12.040
Dimensions	H x W x D	mm	795 x 900 x 320	1.340 x 900 x 320	1.340 x 900 x 320	1.340 x 900 x 320
Sound pressure Level		dB(A)	48	52	53	54
Power source		V	220	220	220	380
INVERTER FS			CU-YL28HBE5 I	CU-YL34HBE5 I	CU-YL43HBE5 I	
Power input		kW - kcal/h	7,10 - 6.106	10,00 - 8.600	12,50 - 10.750	
Dimensions		mm	795 x 875 x 320	795 x 900 x 320	1.170 x 900 x 320	
Sound pressure Level		dB(A)	50	54	55	
Power source		V	220	220	220	
HEAT PUMP FS			CU-B28DBE5 [I] / CU-B28DBE8 [III]	CU-B34DBE5 [I] / CU-B34DBE8 [III]	CU-B43DBE8 [III]	CU-B50DBE8 [III]
Power input		kW - kcal/h	7,3 - 6.275	10,45 - 9.000	13,0 - 11.200	14,5 - 12.100
Dimensions	H x W x D	mm	795 x 900 x 320	1.170 x 900 x 320	1.170 x 900 x 320	1.170 x 900 x 320
Sound pressure Level		dB(A)	52	55	56	56
Power source		V	220 - 240 [I] / 380 [III]	220 - 240 [I] / 380 [III]	380 [III]	380 [III]
COOLING ONLY FS			CU-J28DBE5 [I] / CU-J28DBE8 [III]	CU-J34DBE5 [I] / CU-J34DBE8 [III]	CU-J43DBE8 [III]	CU-J50DBE8 [III]
Power input		kW - kcal/h	7,3 - 6.275	10,45 - 9.000	13,0 - 11.200	14,5 - 12.100
Dimensions	H x W x D	mm	795 x 900 x 320	1.170 x 900 x 320	1.170 x 900 x 320	1.170 x 900 x 320
Sound pressure Level		dB(A)	52	55	56	56
Power source		V	220 - 240 [I] / 380 [III]	220 - 240 [I] / 380 [III]	380 [III]	380 [III]

[I] Single-phase [III] Three-phase

CONNECTIVITY

CONTROL SYSTEM

Panasonic's Twin systems can be controlled from a wired remote control or an infrared remote control.
Multi Mix systems also have various control options.
Group control: It is possible to control up to 16 systems at the same time using a single wired or infrared control. The operating settings will be the same for all the connected systems, but the compressors will start in sequence.

WIRED REMOTE CONTROL
FS HEAT PUMP / FS INVERTER
CZ-RL513C (HIDE-AWAY, CASSETTE AND CEILING)

INFRARED REMOTE CONTROL
FS HEAT PUMP / FS INVERTER
CZ-RL513B (CASSETTE)
CZ-RL513T (CEILING)

GROUP CONTROL BY A SINGLE REMOTE CONTROLLER

- All indoor units operate in the same mode.

SEPARATE CONTROL BY TWIN REMOTE CONTROLLERS

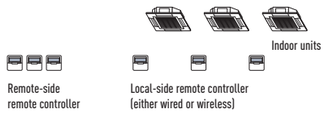

- Each indoor unit can be operated by either of the two remote controllers.
- Apart from the timer setting time, the displays for the two remote controllers are identical.
- The last button pressed has priority (The main or slave attribute is set with the remote controller).

COMMON CONTROL BY BOTH WIRED AND WIRELESS REMOTE CONTROLLERS

- The last button pressed has priority (using either wired or wireless remote controllers).

CZ-TA31P
ADAPTER FOR EXTERNAL SIGNALS
- A fan outside the indoor unit can be controlled
- External remote controller for switching the indoor unit ON/OFF
- Indoor unit status outputs (operating mode, fault)

CZ-TA40P
ADAPTER FOR URBAN NET
- Connecting board for Urban Net for centralised control of FS range indoor units

CZ-TA50P
ADAPTER FOR ADDRESSING
- Board for manual adjustment of indoor unit addresses for centralised control. Use for setting addresses before connecting the indoor unit to the power and when there is no remote control

CZ-TE20P
POWER SUPPLY
- Power supply for Urban Net (one unit for each Urban Net network)

CZ-20GWAP
CONNECTION INTERFACE FOR URBAN NET AND UM NET
- Indoor units controllable: 64
- Control functions: ON/OFF, Operating mode, Temperature adjustment, Fan speed, Air direction, Fault information, Suction temperature, Filter status information.

CZ-01FULAP
SERIAL INTERFACE UNIT
- Indoor units controllable: 64
- External connection: RS232C

CZ-01ESW11P
PROGRAMMER CONTROLLER
Enables programming of 64 groups.
- Up to 128 indoor units can be controlled
- 8 types of weekly programming
- Stand-by power supply for a maximum of 48 hours
- Maximum wiring length, 1,000 m (total: 2,000 m)

CZ-01ANA11P
UNIFIED ON/OFF CONTROLLER
Permits individual and simultaneous control of 16 groups of indoor units.
- Up to 16 groups can be controlled (128 indoor units)
- Use of 2 remote controls located in different places for operating mode (normal, alarm)
- Centralised control indicator
- Maximum wiring length, 1,000 m (total: 2,000 m)

CZ-02ESM11P
CENTRALISED REMOTE CONTROL
Permits individual control of 64 groups (areas) of indoor units.
- Up to 64 groups can be controlled (128 indoor units, max. of 10 outdoor units)
- 128 groups, maximum, can be controlled (128 indoor units, max. of 10 outdoor units) using 2 centralised remote controllers located in separate locations
- Zone control
- Fault code indicator
- Maximum wiring length, 1,000 m (total: 2,000 m)

CZ-TA31P OPERATION MODE WITH CZ-RD513C (REMOTE CONTROLLER)

CZ-RD513C	VENTILATION	INTERLINK WITH FS SYSTEM		VENTILATION BUTTON OPERATION AND INTERLINK	REMARKS
mode*	button (on/off)	FS operation from Off to On	FS operation from On to Off	Operation	
000	no function	No function	No function	No operation happend even push ventilation button	Factory default setting
001	On/Off possible	No function	No function	ERV individual On/Off possible	No interlink with FS side, ERV can select operate On/Off
002	On/Off possible	No function	Forced ventilation Off	· "ERV ventilation On" can be selected by Ventilation button · In case FS system switched Off, also "Forced ventilation Off"	In case required ventilation continually even at FS system operation is Off mode, ventilation button must be switch On.
003	On/Off possible	Forced ventilation On	Forced ventilation Off	· FS system operation On same time ERV ventilation On. · FS system operation Off on same time ERV ventilation Off	· Manual On/Off possible at FS operation keep On · Manual On/Off possible at FS operation at Off mode · In case continually required ventilation On, ventilation button must be switch On.

*Be sure to select either 001, 002, or 003. ERV: Energy Recovery Ventilators

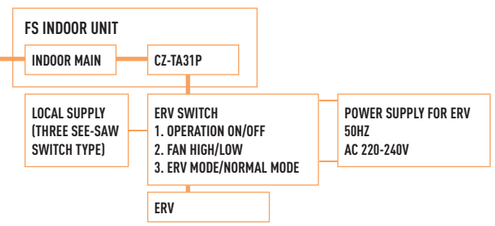

URBAN CONTROLLER TEMPERATURE CONTROL NETWORK COMBINED WITH THE US RANGE

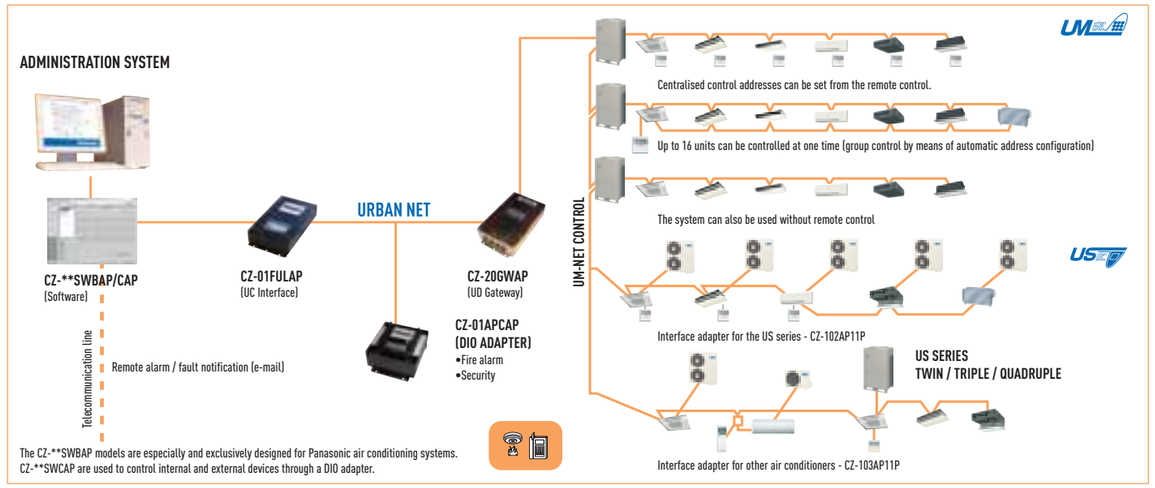

EXAMPLE OF A SYSTEM WITH CENTRALISED CONTROL (UM NET)

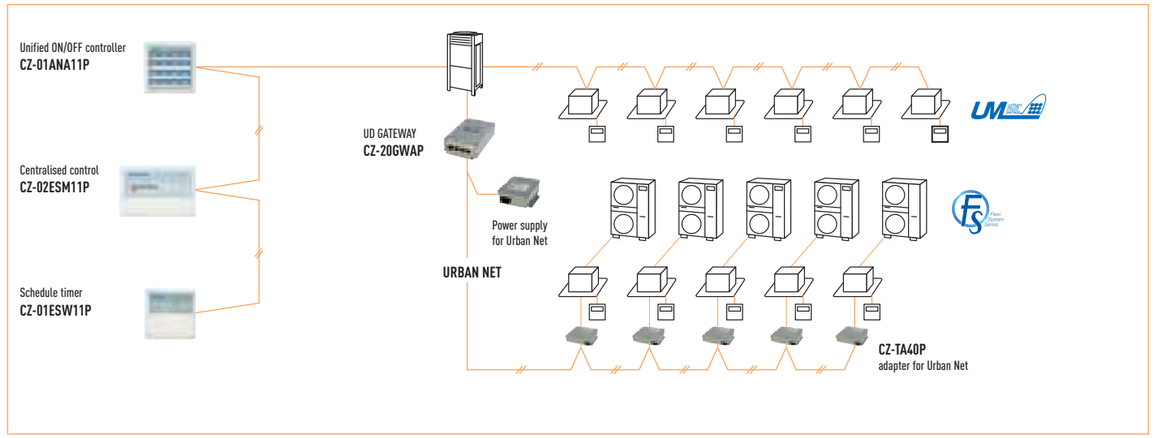

URBAN CONTROLLER TEMPERATURE CONTROL NETWORK COMBINED WITH THE FS RANGE

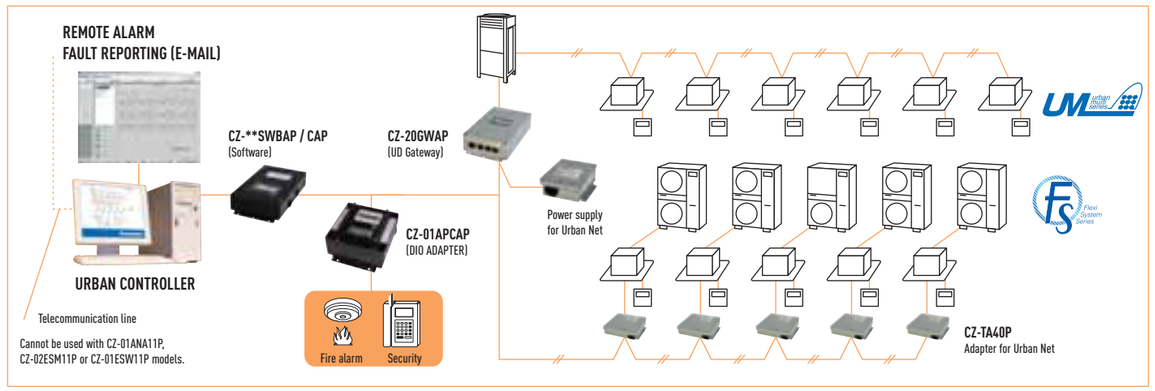

SELF DIAGNOSIS DESCRIPTION AND CHECK POINT TABLE

SELF DIAGNOSIS FUNCTION

Once an abnormality is detected during operation, the unit will immediately stop operation (Self Diagnosis LED at the outdoor unit printed circuit board will light up) and an error code (abnormality) will be saved in memory. The abnormality of the operation can be identified through the below breakdown diagnosis method:

FS WIRED REMOTE CONTROL TYPE

CS-F24/28/34/43/50DB4E5 (CASSETTE TYPE)

CS-F24/28/34/43/50DTE5 (CEILING TYPE)

CS-F24/28/34/43/50DD1E5/50DD2E5/50DD3E5 (DUCTED TYPE)

1. When an abnormality occurs, "CHECK" flashes in the remote control display.
2. Press the CHECK button when the display is flashing. The timer display will change and error code (eg. "F20") will be displayed.
3. Press TIMER SET button while the error code is displayed. The error code display will change to detail display.

OUTDOOR UNIT

WIRED REMOTE CONTROL

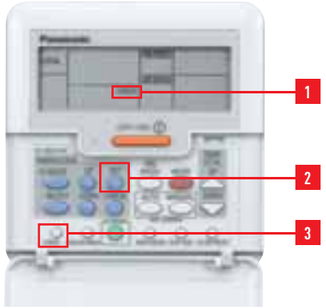

FS WIRELESS REMOTE CONTROL TYPE

CS-F24/28/34/43/50DB4E5 (CASSETTE TYPE)

CS-F24/28/34/43/50DTE5 (CEILING TYPE)

1. When an abnormality occurs, TIMER LED blinks at the indoor receiver indicator.
2. Press the "^" button control continuously for more than 5 seconds to turn on self diagnosis mode. " _ _:_ _"
3. Press "^" button again, "F 00:00" is displayed.
4. By pressing the "^" or "v" button again, the display will change from "F0" to "F9". If beep sound is heard from the indoor unit, press SET button, then the error number will shift to the next digit. Once the error shift to the lowest digit, error code is determined.
5. If no input of "^" or "v" button for more than 30 seconds, the self diagnosis mode will be cancelled.

OUTDOOR UNIT

WIRELESS REMOTE CONTROL

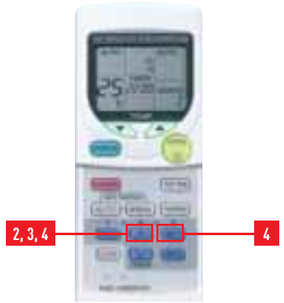

ERROR CODES TABLE // INVERTER MODEL

Warning: Electrical power must be disconnected when terminal protective cover is not in place to protect against electrocution.

LED 301 (green) illuminates to indicate that the microprocessor on the printed circuit board is operating in normal condition. If LED 301 is flashing irregularly, check the power supply. Reset the power.

Remote Control		Outdoor unit printed circuit board LED								Check point location
Code	Detail	302	303	304	305	306	307	308	309	
F15	-01		☼	☼	☼	☼		(✳)	(✳)	Drain level float switch
F16	-01						☼	(✳)	(✳)	Louver switch
F17	-02	☼	☼				☼	(✳)	(✳)	DC fan motor
F20	-01				☼		☼	(✳)	(✳)	Indoor temperature sensor
	-02	☼			☼		☼	(✳)	(✳)	Remote control thermistor
F21	-01		☼		☼		☼	(✳)	(✳)	Pipe temp. sensor (indoor)
F26	-01			☼		☼	☼	(✳)	(✳)	Remote control transmission
F27	-01		☼	☼		☼	☼	(✳)	(✳)	Indoor / Outdoor unit disconnected
	-05	☼	☼	☼		☼	☼	(✳)	(✳)	In. / Out. unit connection problem
F27	-01	☼		☼		☼				Indoor / Outdoor unit disconnected
	-05					☼				In. / Out. unit connection problem
F30	-01						☼			System problem
	-02			☼			☼			Open phase, or reversed phase of supply
F31	-01		☼							Suction pressure protection
	-02	☼								High-pressure cut-off
	-06			☼	☼					4-way valve
	-09		☼	☼	☼					Leakage of refrigerant
	-10		☼	☼		☼				Refrigerant system

Remote Control		Outdoor unit printed circuit board LED								Check point location
Code	Detail	302	303	304	305	306	307	308	309	
F32	-03			☼		☼				Inverter protection (Low DC voltage)
	-04	☼	☼			☼				Inverter protection (IPM protection)
	-05	☼	☼							Compressor overcurrent protection
	-06	☼	☼		☼					Compressor discharge temp. protection
	-08	☼		☼	☼					Inverter protection (PFC protection)
	-09	☼				☼				Inverter protection (DC current protection)
	-10	☼	☼	☼	☼					Number of rotation compressor problem
F35	-02		☼			☼				DC Fan motor lock
F40	-01			☼						Outlet temperature sensor
	-11				☼					Compressor suction temp. sensor
	-21	☼		☼						Heat exchanger outlet temp. sensor
	-31	☼	☼	☼						DEF temperature sensor
	-51		☼	☼						Compressor discharge temp. sensor
F41	-02	☼	☼				☼			High pressure switch open circuit
	-11	☼					☼			Low pressure sensor
F42	-11		☼		☼					Current detector open circuit
F44	-01	☼			☼					Inverter protection (IPM temp. sensor problem)

☼: Blinking ● : Illuminated Blank : OFF

(✳) 308	309	
●		Master
	●	Slave

ERROR CODES TABLE // NON INVERTER MODEL

Warning: Electrical power must be disconnected when terminal protective cover is not in place to protect against electrocution.

LED 1 (green) illuminates to indicate that the microprocessor on the printed circuit board is operating in normal condition. If LED is flashing irregularly, check the power supply. Reset the power.

Remote Control		Outdoor unit printed circuit board LED							Check point location
Code	Detail	2	3	4	5	6	7	8	
F15	-01		☼	☼	☼		☼	(✳)	Drain level float switch
F16	-01						☼	(✳)	Louver switch
F17	-02	☼	☼				☼	(✳)	DC fan motor
F20	-01				☼		☼	(✳)	Indoor temperature sensor
	-02	☼			☼		☼	(✳)	Remote control thermistor
F21	-01		☼		☼		☼	(✳)	Pipe temp. sensor (indoor)
F26	-01			☼		☼	☼	(✳)	Remote control transmission
F27	-01		☼	☼		☼	☼	(✳)	Indoor / Outdoor unit disconnected
	-05	☼	☼	☼		☼	☼	(✳)	Indoor / Outdoor unit connection problem
F27	-01	☼		☼		☼			Indoor / Outdoor unit disconnected
	-05					☼			Indoor / Outdoor unit connection problem
F30	-01				☼	☼			System problem
	-02			☼	☼	☼			Open phase, or reversed phase of supply

Remote Control		Outdoor unit printed circuit board LED							Check point location
Code	Detail	2	3	4	5	6	7	8	
F31	-01		☼						Suction pressure protection
	-02	☼							High-pressure cut-off
F31	-06			☼	☼				4-way valve
	-10		☼	☼		☼			Refrigerant system
F32	-05	☼	☼						Compressor overcurrent protection
	-06	☼	☼		☼				Compressor discharge temp. protection
F40	-21	☼		☼					Heat exchanger outlet temperature sensor
	-51		☼	☼					Compressor discharge temperature sensor
F41	-02	☼	☼		☼	☼			High pressure switch open circuit
	-12	☼		☼	☼	☼			Low pressure sensor
F42	-11		☼		☼				Current detector open circuit

☼: Blinking ● : Illuminated Blank : OFF

(✳) 8	
●	Master
☼	Slave

FS MULTI
AIR CONDITIONING SYSTEM

NEW FS MULTI VRF FROM PANASONIC.

NEW EASY TO INSTALL VRF, SPECIALLY DESIGNED FOR HOMES AND SMALL COMMERCIAL BUILDINGS: LARGE LINEUP OF INDOOR UNITS, ETHEREA WALL MOUNTED DESIGN, 4-5-6-8-10 HP OUTDOOR UNITS, SINGLE PHASE AND THREE PHASE

ETHEREA
designed to care for you

maximum flexibility
VRF

VRF. The Inverter plus range provides greater efficiency.

A class energy saving
INVERTER+

INVERTER PLUS SYSTEM. Inverter+ products improve on the characteristics of standard Inverter range by over 20%. A Inverter plus is also A class on cooling and heating mode.

environmentally friendly refrigerant
R410A

R410A. Environmentally friendly refrigerant.

down to -20°C in heating mode
OUTDOOR TEMPERATURE

DOWN TO -20ºC IN HEATING MODE
The VRF system works in heating mode at outdoor temperatures down to -20°C (8 and 10 HP) or -15°C (4, 5 and 6 HP)

VRF AIR CONDITIONING

The FS Multi is a variable refrigerant flow (VRF) system that uses a single outdoor unit to independently control multiple indoor units. By communicating with the indoor units, the outdoor unit controls the flow of refrigerant to each one of them to match their cooling or heating loads. This enables independent operation for each of the indoor units, with inverter control providing optimum energy-saving operation. Air conditioning in multiple rooms by a single outdoor unit also means much less construction and a big improvement in the appearance of buildings. A wide range of indoor models are available to satisfy the needs of different kinds of buildings. Taking advantage of its extensive experience with models for both the home and commercial facilities, Panasonic is ready to provide the ideal air conditioning solution.

FS MULTI
AIR CONDITIONING SYSTEM

FS MULTI ADVANTAGES

FS Multi's cutting edge VRF technology is perfectly suited to medium-sized or small areas, with single-phase power sources, together with advanced Inverter technology, opening up previously unimagined possibilities in the world of air conditioning.
Air conditioning spaces can now take on a new dimension. If you have bought a new property, residence, office or commercial place which is still in the construction phase, or if you are refurbishing, Panasonic offers you the chance to enjoy FS Multi air conditioning.

NEW FS MULTI VRF FROM PANASONIC

- Total freedom of choice. Up to 30 different indoor unit models. Allows you to choose the best option depending on architectural needs and decoration criteria.
- Three single-phase outdoor unit ratings: 4, 5 and 6 H.P.
- Two three-phase outdoor unit ratings: 8 and 10 H.P.
- Inverter technology with R410A refrigerant, "greater comfort and economy with lower consumption".
- Greatest space reduction. A single outdoor unit feeds up to 16 indoor units (at 10 H.P.).
- Ease of installation. Thanks to the reduced dimensions of the outdoor unit it can be taken to the roof of the building in the lift.

SYSTEM ADVANTAGES. INSTALLATION AND MAINTENANCE FLEXIBILITY

The FS Multi system solves the air conditioning design and construction problems that arise due to pipes at different heights and the location of the installation site. Exceptional installation flexibility makes installation easy and maintains the attractive appearance of buildings.

EASY MAINTENANCE

When there is a breakdown in an indoor unit, the system continues to work without this indoor unit. The outdoor unit does not stop, and the rest of the indoor units continue to operate.

REFRIGERANT CHARGE-FREE SYSTEM ON THE 4, 5 AND 6 HP

The FS Multi is a refrigerant charge-free system that does not require a charge of additional refrigerant even when using a full pipe length of up to 90m. This dramatically shortens the installation time required for charging with additional refrigerant, weight measurement and pressure judgment. It also eliminates charge amount calculation and there's less chance of a cooling capacity shortage due to an incorrect amount of refrigerant being used or other errors.

PUMP-DOWN MODE (4, 5 AND 6 HP)

The exterior 4, 5 and 6 HP FSM units have a pump-down mode incorporated, making it possible to drain all of the refrigerant from the installation (not just from the external machine). This facilitates changing the installation and maintenance.

WHEN INSTALLATION SPACE IS LIMITED

A single compact FS Multi system outdoor unit enables air conditioning in multiple rooms, solving the problems of narrow or limited installation space.

Single Split FS Multi

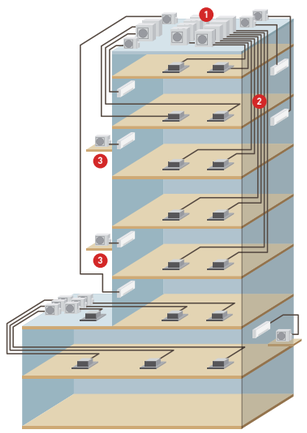

FREQUENT SINGLE SPLIT SYSTEM PROBLEMS

1. Requires many outdoor units and large installation space.
   So it spoils the building's appearance, and the building's strength must be assessed.
2. Requires many pipe shafts.

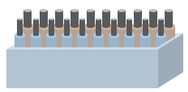

3. Pipes are short so outdoor units have to be installed on wall surfaces.
   Insufficient pipe length makes installation impossible.

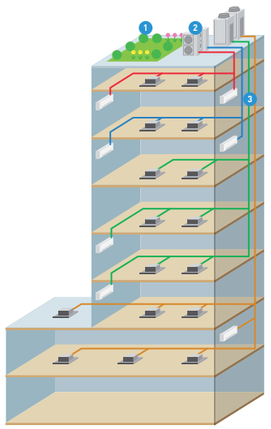

FS MULTI SYSTEM SOLUTION

1. Minimized number of outdoor units thanks to multi system. Rooftop space can be used more effectively and the unit load on the roof is considerably reduced.
2. Outdoor units can be installed close to each other, maintaining the building's appearance and enhancing the installation flexibility.
3. The number of pipings is reduced, thus minimising the space required in pipe shafts.

OUTDOOR UNITS
U-4LA1E5 // U-5LA1E5 // U-6LA1E5

PIPES OF UP TO 90 M

The total length of the pipe between a system's indoor and outdoor units can be extended up to 90 metres, with a height difference of up to 30 metres. These ample limits make it possible to place the outdoor unit on the roof. The maximum height difference between indoor units in the same system may be up to 15 metres, thus covering 4 or 5 floors in the same system.

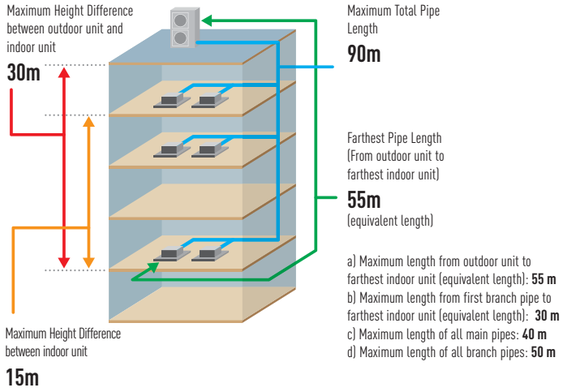

RESIDENCES

Since a layout using long piping is possible, a single outdoor unit can be used even for multi-story residences. And there's a range of indoor unit designs to choose from to complement different interiors.

HIGH-STORY APARTMENTS

Enabling air conditioning in multiple rooms with a single outdoor unit, the FS Multi system offers an effective solution to today's demand for aesthetically pleasing condominiums. The indoor units are also available in designs providing an ideal match for modern living environments.

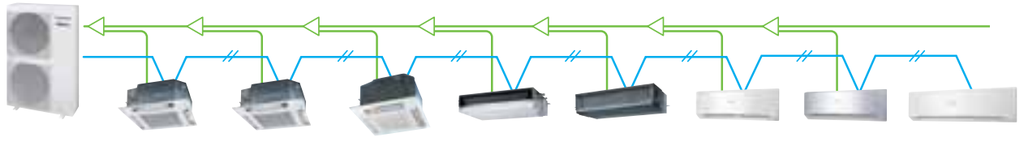

SYSTEM / HP	4HP	5HP	6HP
Connectable Indoor Unit	6	8	8

Refrigerant pipe
URBAN net control line

SPACE-SAVING DESIGN

Improvement of the outdoor units fan has reduced the size of the unit to enable installation in a smaller space. Without sacrificing quietness, higher efficiency is also attained. More freedom in installation contributes to the easy piping and facilitates installation. It will lead to a reduction in installation costs.

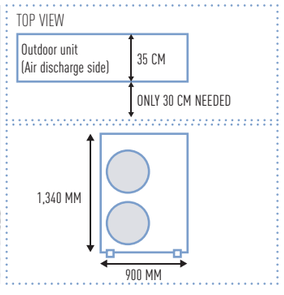

OUTDOOR UNITS
U-8EA1E8 // U-10EA1E8

PIPES OF UP TO 300 M

The total length of the pipe between a system's indoor and outdoor units can be extended up to 300 metres, with a height difference of up to 50 metres. These ample limits make it possible to place the outdoor unit on the roof. The maximum height difference between indoor units in the same system may be up to 15 metres, thus covering 4 or 5 floors in the same system.

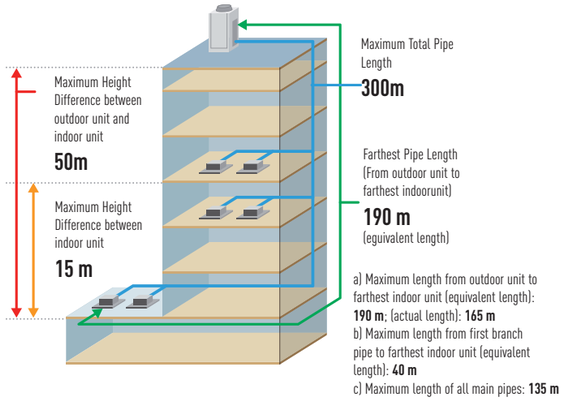

OFFICES, SHOPS AND BOUTIQUES

As well as being ideal for new buildings, the FS Multi system offers space-saving benefits when refurbishing and renovating existing spaces. What's more, independent air conditioning reduces energy wasted in unused offices, and much neater pipe layout is possible than with a single split system. Using the Weekly Timer also enables setting for the optimum energy-saving operation in offices and commercial facilities. And there are options enabling demand control and digital connection compatibility to meet the needs of business applications.

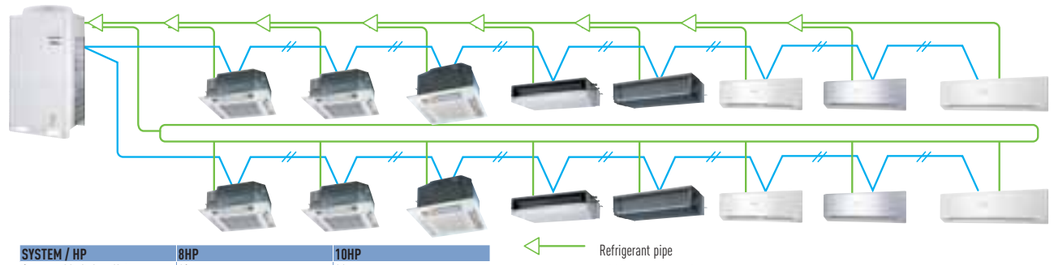

SYSTEM / HP	8HP	10HP
Connectable Indoor Unit	13	16

Refrigerant pipe
URBAN net control line

HIGH EXTERNAL STATIC PRESSURE MODE

8 and10 Hp outdoor unit can be selected high external static pressure mode (up to 60Pa) by outdoor unit local setting mode.

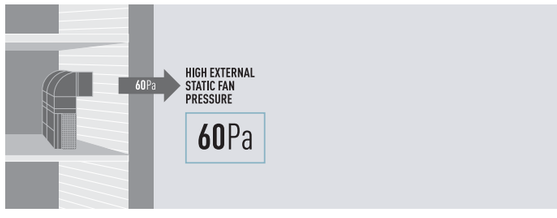

1 Hyper Wave Inverter

2 DC Inverter Compressor

3 Large Diagonal Air Flow Fan

ENERGY SAVING INVERTER

All the models of Panasonic FS Multi series are equipped with DC inverter compressor for the higher EER operation. The new design attains the quiet and high-efficient operation and reduces the running cost.

PANASONIC'S ORIGINAL HIGH-PERFORMANCE COMPRESSOR

It's the compressor at the heart of an air conditioner that determines reliability and efficiency.
The FS Multi features Panasonic's original high-performance compressor to assure outstanding performance and quality.

HIGH-EFFICIENCY COMPRESSOR

By using a powerful neodymium (rare-metal) magnet for a motor allowed Panasonic to make the motor more compact. The winding rotor motor of less magnetic field distortion attains higher efficiency.

HYPER WAVE INVERTER

The Panasonic group's experiences and actual results in the developments of inverters are released in the control. This control of the inverter demonstrates the optimum compressor torque. The FS Multi series quickly heats up the room to the set temperature and maintains a comfortable condition, whilst ensuring energy efficiency and savings.

OUR CONVENTIONAL INVERTER

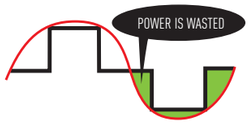

The current waveform deviates from the motor voltage waveform, so power is wasted.

HYPER WAVE INVERTER

The current waveform closely matches the motor voltage waveform, so power consumption is reduced.

COMPARE THIS TO A CAR ROUNDING A CORNER

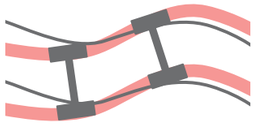

Power is wasted when the car swings off course.

When the car stays right on course, there's no power loss.

QUIET OPERATION

A host of silencing technologies achieve super-quiet operation. We've also improved operating efficiency and reduced energy consumption.

NEW 2011

INNOVATIVE AND PERFECT CONTROL OF LOADING FOR THE 4, 5 AND 6 HP

The outdoor unit controls and optimises the loading of refrigerant in the system by asking each indoor unit its requirements. With this very innovative loading control, the system is highly efficient and the indoor unit responds very quickly to demands.

ENERGY SAVING

Quality features translate into energy savings thanks to greater energy efficiency. This efficiency is due to the fact that each room is individually controlled and only the rooms that require air-conditioning are heated or cooled. Moreover, thanks to Inverter technology, the level of air conditioning can be adjusted precisely depending on each room's condition.

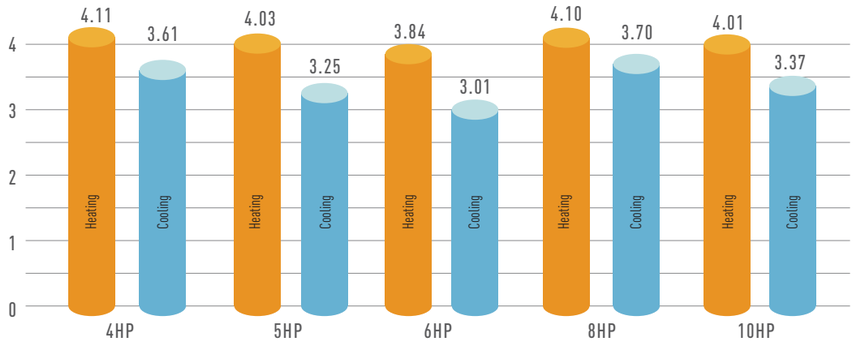

BROAD OPERATING RANGE

The heating function will remain stable indoors even when the temperature outside drops to -15 ºC, thus meeting users different needs. Moreover, the cooling function operates from -5 ºC to 43 ºC.

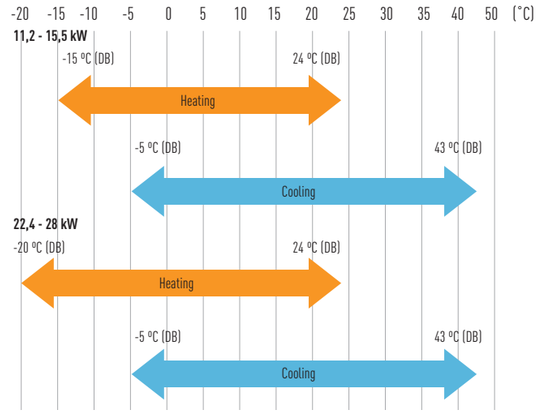

COOLING ONLY MODEL SETTING

- The unit designed for cooling only can be set by the JP wire on the outdoor unit PC board.
- After setting this mode, the FS Multi system cools only.

OUTDOOR UNIT SILENT OPERATION MODE

The Silent Operation mode of the outdoor unit can be selected by remote control. There are three mode settings that reduce the noise level by up to 6dB(A). (When the Silent Operation mode is selected, cooling and heating capacity are reduced.)

EXAMPLE AT 4HP MODEL AT COOLING OPERATION

Reference	Capacity index*	Sound pressure dB(A)
Normal mode	100	52
LV1	80	50
LV2	72	48
LV3	62	46

* The indexes are nominal capacity operation reference values

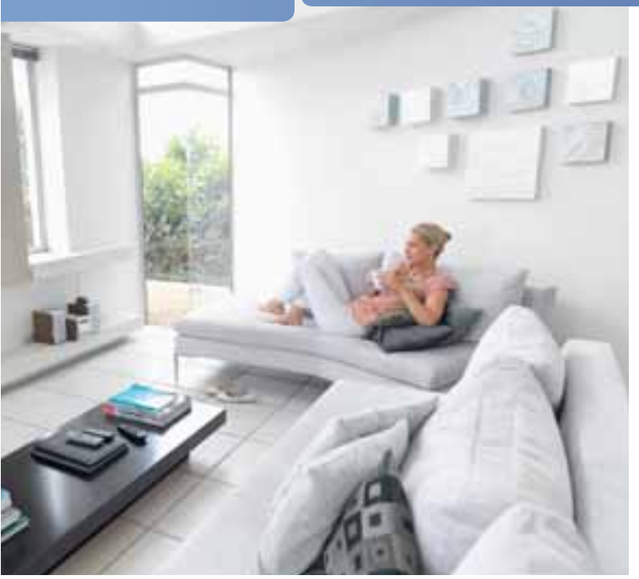

INDIVIDUAL CONTROL SYSTEMS

Unlike conventional air conditioning systems, the VRF system is applied separately to each room.
So, this system is ideal for areas with fluctuation in traffic. Moreover, you can have precise control over each of the rooms to achieve exact conditions. Individual control makes this system more cost-effective and efficient.

INDIVIDUAL CONTROL BY A SINGLE REMOTE CONTROLLER

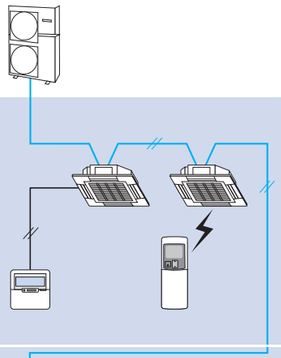

GROUP CONTROL BY A SINGLE REMOTE CONTROLLER (MAXIMUM 16 INDOOR UNITS)
- All indoor units operate in the same mode.

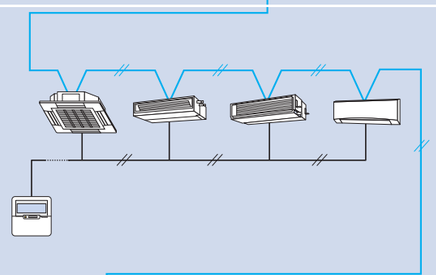

COMMON CONTROL BY BOTH WIRED AND WIRELESS REMOTE CONTROLLERS
- The last operating signal received has priority (using either wired or wireless remote controllers).

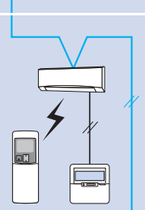

COMMON CONTROL BY TWO WIRED REMOTE CONTROLLERS
- The last operating signal received has priority.
- Apart from the timer setting, the displays of the two remote controllers are identical.

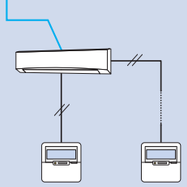

WIRED REMOTE CONTROLLER

CZ-RT1

- Remote controller with LCD and self-diagnosis
- Constant monitoring of the system with fault detection
- Weekly timer function
- Maintenance time and cost reduction

OPERATING BUTTONS
- ON/OFF
- Real time daily timer
- Weekly timer : 6 actions per day (total 42 actions per week), including temperature setting.
- Temperature adjustment
- Adjusting air direction
- Selection of operating mode
- Fan speed control
- Restart filter
- Ventilation interlink

MONITOR
- Operating mode
- Centralised control indicator
- Demand control indicator
- Operation priority indicator
- Selected temperature
- Air direction
- Clock
- Day of the week indicator
- Inspection/operating test
- Fan speed
- Filter maintenance
- Defrost/hot start indicator
- Error mode display

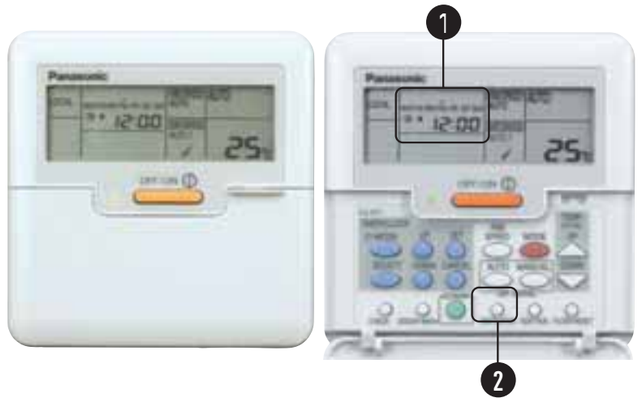

1. WEEKLY TIMER

Weekly timer setting (each day of the week) is available to control the air conditioner. Max. 6 settings/day and 42 settings/week can be executed. The setting temperature can also be programmed for optimal comfort.

EXAMPLES OF SETTING WEEKLY TIMER

Shop with regular holidays

Example:
Closed Saturday afternoon and all day Sunday.

Mon-Fri On 9:00, Off 18:00
Sat On 9:00, Off 12:00
Sun Not set

The timer can have different settings for every day of the week.

The number of persons varies depending on time zones.

Example:
Set a lower temperature at lunch time when many people may visit.

Everyday
On 12:00 23ºC
On 14:00 28ºC

In this case, the temperature can be set at the same time.

Not to forget to switch OFF

Example:
To prevent forgetting to switch OFF weekdays

Mon-Fri
Off 20:00

The timer can be set for simple shut-off operation.

HOW TO SET

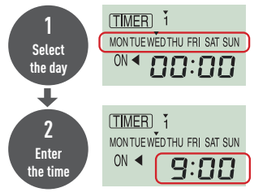

***Simple Timer Mode**

2. VENTILATION INTERLINK

When the external device such as a ventilator is connected to the indoor unit, switch ON/OFF of the ventilator can be controlled by the wired remote control. Either link-ventilation or independent-ventilation is selectable.

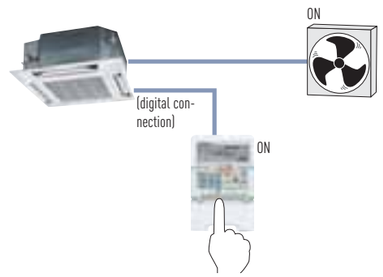

Energy recovery ventilators are also offered by Panasonic.
Optional printed circuit board (Interface Adapter for External Signals: CZ-TA31P*) is needed.

INTERFACE ADAPTER FOR EXTERNAL SIGNALS

CZ-TA31P*

- By connecting to the indoor unit, a separately sold ventilator can be controlled.
- Remote control operation of the indoor unit is enabled (ON/OFF control).
- The operating condition of the indoor unit (malfunctions, operating status) can be externally output.
- Control in linkage with a Energy Recovery Ventilators (ERV) or similar is possible.

CONNECTION WITH EXTERNAL CENTRAL SYSTEM

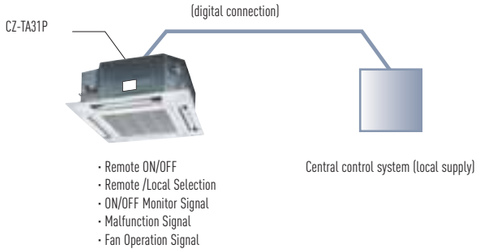

INTERLINK WITH VENTILATION OR ERV

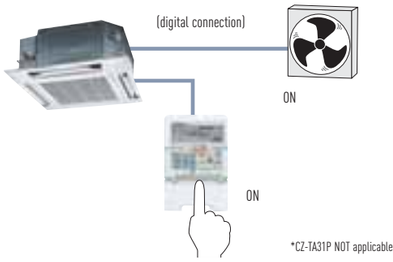

*CZ-TA31P NOT applicable for wall-mounted indoor unit

WIRELESS REMOTE CONTROLLER

HEAT PUMP MODELS
CZ-RWS1

COOLING ONLY MODELS
CZ-RWC1

- Remote controller with LCD and self-diagnosis
- Error code recognition
- Maintenance time and cost reduction
- Real time daily timer

OPERATING BUTTONS

- ON/OFF
- Activate/deactivate programmer
- Real time daily timer
- Temperature adjustment
- Air direction
- Operating mode
- Fan speed control
- Restart filter
- Inspection of error code

MONITOR

- Operating mode
- Temperature selected
- Air direction
- Time programming
- Error code display
- Fan speed
- Clock

WIRELESS CONTROLLER RECEIVER

FOR CASSETTE TYPE
CZ-RWRU1

for Cassette

FOR DUCT TYPE
CZ-RWRM1

Wireless receivers for wall-mounted and 60x60 Cassette types are equipped as standard.

COOLING/HEATING CONTROLLER FOR THE OUTDOOR UNIT

CZ-RD1

Enables the cooling, heating and ventilating operating mode for each outdoor unit. Allows the operating mode to be changed for several outdoor units at the same time by means of a single remote control.

TERMINAL MODULE (EQUIPPED AS STANDARD ON THE OUTDOOR UNIT)

CZ-CAP1 (only for 4-6 HP outdoor units, 8-10HP is standard equipped)
Control terminal to be connected with outside devices or CZ-RD1 controller.

- Used to receive forced stop digital signal from local procured central control system.
- Used to receive demand control signal from local procured central control system. (Demand control for energy saving with 3-level selection)
- Required to connect with CZ-RD1 cooling/heating controller.
- Group control of several FS Multi systems for forced stop and CZ-RD1 cooling/heating controller.

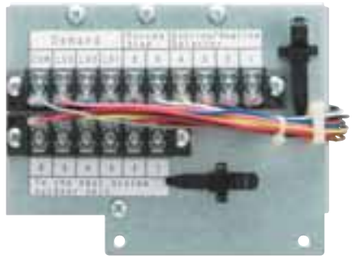

WHEN CONNECTING FORCED STOP INPUT

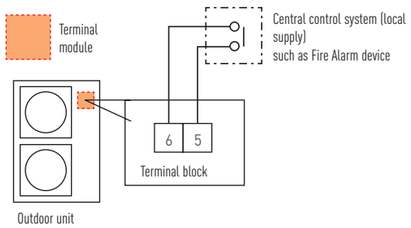

WHEN CONNECTING DEMAND CONTROLLER

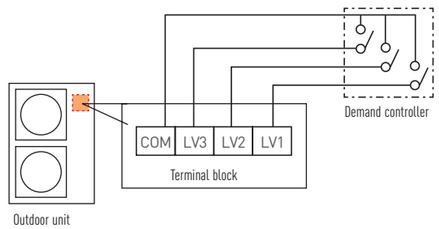

CAPACITY		
Terminal	4/5/6HP	8/10HP
LV1	70%	85%
LV2	30%	70%
LV3	0%	0%

WHEN USING CZ-RD1 (COOLING / HEATING SELECTOR)

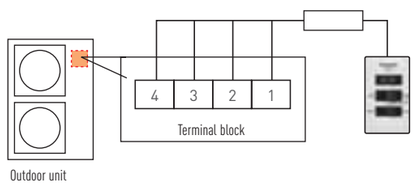

GROUP CONNECTION

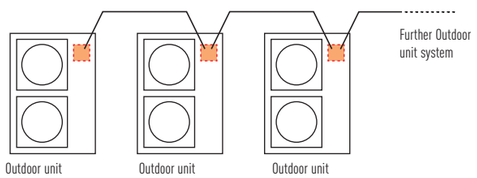

*Not applicable for demand controller

COMBINATION TABLE

The FS Multi system attains maximum indoor unit connection capacity of up to 130% in the units connection range, depending on the outdoor and indoor models selected. In the case of a 6HP outdoor unit (15.5kW/53,000Btu/h), connection is possible with a maximum indoor unit range of 20.15kW. So for a reasonable investment, the FS Multi system provides an ideal air conditioning solution for locations where full cooling/heating is not always required.

COMBINATION TABLE

Reference	Outdoor unit System cooling capacity	Maximum indoor unit	Standard combination capacity*	Maximum combination capacity	Minimum combination capacity
U-4LA1E5	4.0HP/ 11.2 kW/ 38,200 Btu/h	6	11.2 kW	14.56 kW	5.6 kW
U-5LA1E5	5.0HP/ 14.0 kW/ 47,800 Btu/h	8	14.0 kW	18.20 kW	7.0 kW
U-6LA1E5	6.0HP/ 15.5 kW/ 52,900 Btu/h	8	15.5 kW	20.15 kW	7.75 kW
			100%	130%	50%

*Standard combination capacity is the system's maximum cooling capacity.

COMBINATION EXAMPLE

Correct

	Reference	Quantity	Capacity	Minimum combination capacity	Maximum combination capacity
Outdoor	U-6LA1E5	1	15.5 kW*	7.75 kW	20.15 kW
Indoor	S-22KA1E5	1	2.2 kW	-	-
	S-36KA1E5	2	(3.6×2)7.2 kW	-	-
	S-22NA1E5	1	2.2 kW	-	-
	S-28NA1E5	3	(2.8×3)8.4 kW	-	-
Total indoor capacity		7	20.0 kW(129%)		

Incorrect

	Reference	Quantity	Capacity	Minimum combination capacity	Maximum combination capacity
Outdoor	U-6LA1E5	1	15.5 kW*	7.75 kW	20.15 kW
Indoor	S-22KA1E5	1	2.2 kW	-	-
	S-36KA1E5	2	(3.6×2)7.2 kW	-	-
	S-45KA1E5	1	4.5 kW	-	-
	S-22NA1E5	1	2.2 kW	-	-
	S-28NA1E5	3	(2.8×3)8.4 kW		
Total indoor capacity		8	24.5 kW(158%)		

*Standard combination capacity is the system's maximum cooling capacity.

BRANCH PIPES

R410A BRANCH PIPE KITS

The use of branch piping combined with expansion valves mounted in VRF indoor unit considerably reduces the imbalance of the refrigerant liquid flow between indoor units despite the smaller piping diameter. The joints for these pipes have been designed to reduce installation time, as they are easy to fit. Finally, the branch pipes optimise refrigerant flow.

CZ-P155BK1 / CZ-P280BK1

Section

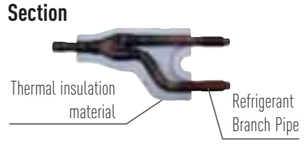

BRANCH PIPE KIT CZ-P155BK1

1 Liquid side branch pipe (inner diameter)

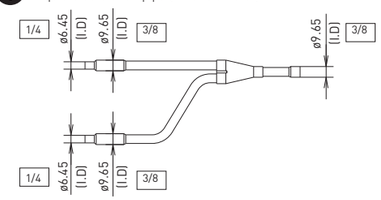

2 Gas side branch pipe (inner diameter)

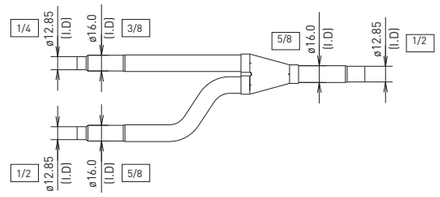

BRANCH PIPE KIT CZ-P280BK1

1 Liquid side branch pipe (inner diameter)

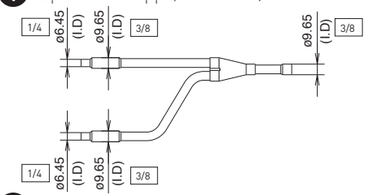

2 Gas side branch pipe (inner diameter)

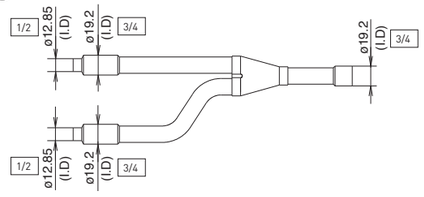

PIPE ADAPTORS ARE SUPPLIED WITH THE PACKAGE.

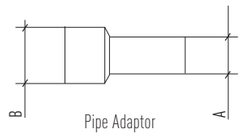

A	B	Quantity
Ø19.05	0 15.88	1
Ø 12.70	0 15.88	2
Ø 19.05	0 25.40	1
Ø 19.05	22.2	3
Ø 9.52	12.7	1

(only for 8-10 HP)

CZ-P3HPC2: 3-PIPE HEADER
CZ-P4HPC2 / CZ-P4HP2C2 : 4-PIPE HEADER

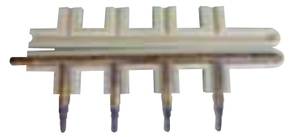

DETAILS OF PARTS SUPPLIED.
CZ-P3HPC2 / CZ-P4HPC2 / CZ-P4HP2C2

FOR 4 PIPE HEADER

Connectivity capacity	280	355-450	560-710
Max pipe length 90m	CZ-P4HPC2	CZ-P4HP2C2	CZ-P4HP2C2

1 Liquid side header branch pipe (inner diameter)

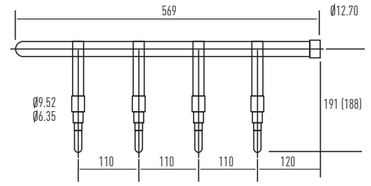

2 Gas side header branch pipe (inner diameter)

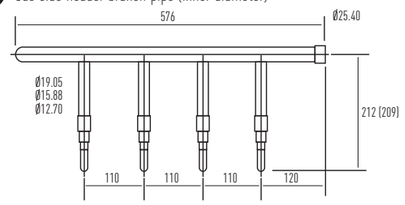

PIPE ADAPTORS SUPPLIED WITH THE PACKAGE.

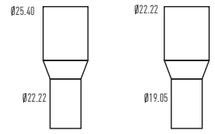

UP TO 2 HEADER BRANCH PIPES CAN BE JOINED TOGETHER.

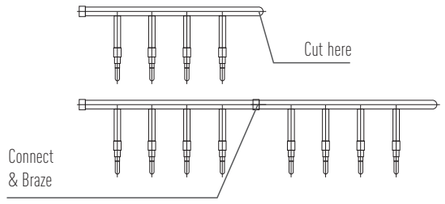

TECHNICAL ZOOM

- REFRIGERANT CHARGE-FREE SYSTEM (NO ADDITIONAL REFRIGERANT IS REQUIRED)
- VERY QUIET OUTDOOR UNITS
- FLEXIBLE INSTALLATION AND EASY SETUP
- EASY TROUBLE CHECK FUNCTION
- SPACE-SAVING DESIGN

4, 5 AND 6 HP, OUTDOOR UNIT

THE 4, 5 AND 6 HP OUTDOOR UNITS MONOPHASE, ARE IDEAL FOR INSTALLATIONS IN RESTAURANTS, OFFICES AND HOMES. All the models of Panasonic FS Multi series are equipped with DC inverter compressor for the higher energy saving operation. The new design attains the quiet and high-efficient operation and reduces the running cost.

maximum flexibility VRF | A class energy saving INVERTER+ | environmentally friendly refrigerant R410A | down to -15ºC in heating mode OUTDOOR TEMPERATURE

HP				4HP	5HP	6HP
Model number				U-4LA1E5	U-5LA1E5	U-6LA1E5
Power Source			phase	1ø	1ø	1ø
			V	220-230-240	220-230-240	220-230-240
			Hz	50Hz	50Hz	50Hz
Cooling	Capacity		kW [Btu/h]	11.20 [38,200]	14.00 [47,800]	15.50 [52,900]
	Power Input		W	3,100	4,310	5,150
	EER		W/W [Btu/h]	3.61 [12.32]	3.25 [11.09]	3.01 [10.27]
	Current[1]		A	14.20	19.80	23.50
	Air Volume		m³/min [ft³/min]	92.0 [3,247]	95.0 [3,353]	98.0 [3,459]
	Sound Pressure Level	Hi/Lo	dB [A]	52/-	53/-	55/-
	Sound Power Level	Hi/Lo	dB	70/-	71/-	73/-
	Operating Range	Min. - Max.	˚C	-5˚C - 43˚C	-5˚C - 43˚C	-5˚C - 43˚C
Heating	Capacity		kW [Btu/h]	12.50 [42,700]	16.00 [54,600]	18.00 [61,400]
	Power Input		W	3,040	3,970	4,690
	COP		W/W [Btu/h]	4.11 [14.04]	4.03 [13.75]	3.84 [13.09]
	Current[1]		A	13.90	18.10	21.40
	Air Volume		m³/min [ft³/min]	92.0 [3,247]	95.0 [3,353]	98.0 [3,459]
	Sound Pressure Level	Hi/Lo	dB [A]	54/-	55/-	57/-
	Sound Power Level	Hi/Lo	dB	71/-	72/-	74/-
	Operating Range	Min. - Max.	˚C	-15˚C - 24˚C	-15˚C - 24˚C	-15˚C - 24˚C
Connectable Indoor Unit	Total Capacity			50~130% of Outdoor Unit Capacity		
	Model/Qty		unit	S-22 ~ S-90 /2 - 6	S-22 ~ S-90 /2 - 8	S-22 ~ S-90 /2 - 8
Moisture Removal Volume			L/h [Pt/h]	6.8 [14.3]	9.0 [18.9]	10.3 [21.6]
Dimensions	H x W x D		mm	1,340 x 900 x 350[+40][2]	1,340 x 900 x 350[+40][2]	1,340 x 900 x 350[+40][2]
			inch	52-3/4 x 35-7/16 x 13-25/32(+1-9/16)	52-3/4 x 35-7/16 x 13-25/32(+1-9/16)	52-3/4 x 35-7/16 x 13-25/32(+1-9/16)
Net Weight			kg [lb]	115 [253]	123 [271]	123 [271]
Piping Connection	Liquid Side		mm [inch]	ø9.52 [3/8]	ø9.52 [3/8]	ø9.52 [3/8]
	Gas Side		mm [inch]	15.88 [5/8]	15.88 [5/8]	15.88 [5/8]
Maximum Total Piping Length		Min. - Max.	m [ft]	20 - 90 [65.6 - 295.2]	20 - 90 [65.6 - 295.2]	20 - 90 [65.6 - 295.2]
Height Difference (Maximum)		Max	m [ft]	30 [98.4]	30 [98.4]	30 [98.4]
Max Charge less Length		Max	m [ft]	90 [295.2]	90 [295.2]	90 [295.2]
Refrigerant				R410A / 7kg	R410A / 8kg	R410A / 8kg

GLOBAL REMARKS

Rating conditions	Cooling	Heating
Inside air temperature	27ºC DB / 19ºC WB	20ºC DB
Outside air temperature	35ºC DB / 24ºC WB	7ºC DB / 6ºC WB

DB: Dry Bulb; WB: Wet Bulb

1 These values are at 230V only. For 220V and 240V specifications, please refer to the technical data book.
2 Add 40mm for discharge grille.

Power	4HP	5HP	6HP
Reference	U-4LA1E5	U-5LA1E5	U-6LA1E5
Maximum combination of indoor unit	6	8	8
Power rates (kW)	5.6 - 11.2 - 14.6	7.0 - 14.0 - 18.2	7.8 - 15.5 - 20.2
Power supply (V/Hz)	220-240 / 50	220-240 / 50	220-240 / 50

U-4LA1E5 // U-5LA1E5 // U-6LA1E5

Control Flexibility
- Cooling Only Model Setting (by jumper line cut)
- Power Save Mode
- Outdoor Unit Silent Operation Mode
- Auto Restart

Field Service & Maintenance
- Pump Down Operation
- Cooling Operation TESTRUN
- Heating Operation TESTRUN
- Automatic Address Resetting
- Self Diagnosis Function (LED display)

Digital Input/Output
- Cooling/Heating Selector
- Demand Control Input (LV1/LV2/LV3)
- Forced STOP Input

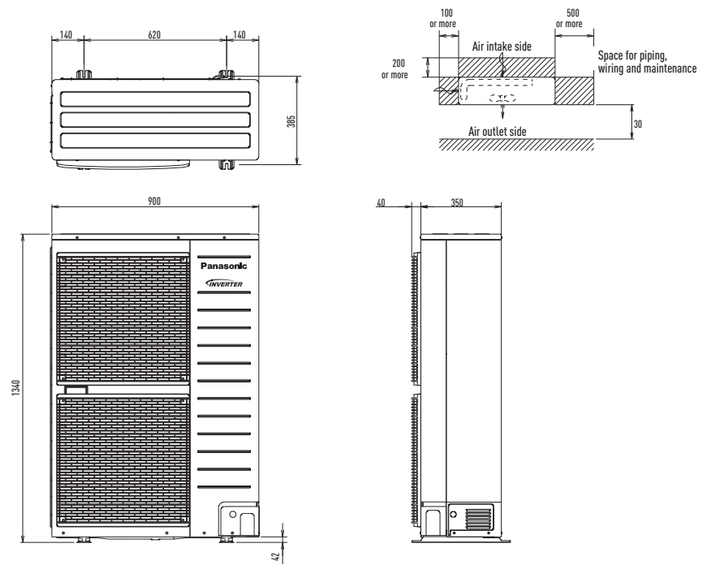

TECHNICAL ZOOM

- VERY QUIET OUTDOOR UNITS
- FLEXIBLE INSTALLATION AND EASY SETUP
- EASY TROUBLE CHECK FUNCTION
- SPACE-SAVING DESIGN

8 AND 10 HP, OUTDOOR UNITS

NEW 8 AND 10 HP OUTDOOR UNITS TRIPHASE. EASY TO INSTALL, HIGH PERFORMANCES!
All the models of Panasonic FS Multi series are equipped with DC inverter compressor for the higher energy saving operation. The new design attains the quiet and high-efficient operation and reduces the running cost.

maximum flexibility VRF | A class energy saving INVERTER+ | environmentally friendly refrigerant R410A | down to -20°C in heating mode OUTDOOR TEMPERATURE

NEW 2011

HP				8HP NEW 2011	10HP NEW 2011
MODEL NUMBER				U-8EA1E8	U-10EA1E8
Power Source			phase	3ø	3ø
			V	380-400-415	380-400-415
			Hz	50Hz	50Hz
Cooling	Capacity		kW [Btu/h]	22.40 [76,500]	28.00 [95,600]
	Power Input		W	6,050	8,310
	EER		W/W [Btu/h]	3.70 [12.64]	3.37
	Current[1]		A	9.40	12.80
	Air Volume		m³/min [ft³/min]	150 [5,297]	154 [5,438]
	Sound Pressure Level	Hi/Lo	dB [A]	58/-	59/-
	Sound Power Level	Hi/Lo	dB	78/-	79/-
	Operating Range	Min. - Max.	°C	-5°C - 43°C	-5°C - 43°C
Heating	Capacity		kW [Btu/h]	25.00 [85,300]	31.50 [107,500]
	Power Input		W	6,100	7,860
	COP		W/W [Btu/h]	4.10 [13.98]	4.01
	Current[1]		A	9.40	12.10
	Air Volume		m³/min [ft³/min]	150 [5,297]	154 [5,438]
	Sound Pressure Level	Hi/Lo	dB [A]	59/-	60/-
	Sound Power Level	Hi/Lo	dB	79/-	80/-
	Operating Range	Min. - Max.	°C	-20°C - 24°C	-20°C - 24°C
Connectable Indoor Unit	Total Capacity			50~130% of Outdoor Unit Capacity	50~130% of Outdoor Unit Capacity
	Model/Qty		unit	S-22 ~ S-125 /2 - 13	S-22 ~ S-125 /2 - 16
Dimensions	H x W x D		mm	1,745×920×760	1,745×920×760
			inch	68-11/16×36-7/32×29-29/32	68-11/16×36-7/32×29-29/32
Net Weight			kg [lb]	195 [430]	210 [463]
Piping Connection	Liquid Side		mm [inch]	ø9.52 [3/8]	ø9.52 [3/8]
	Gas Side		mm [inch]	19.05 [4/3]	22.22 [7/8]
Maximum Total Piping Length		Min. - Max.	m [ft]	15 - 300 [49.2 - 984.2]	15 - 300 [49.2 - 984.2]
Height Difference (Maximum)		Max	m [ft]	50 [164.0]	50 [164.0]
Refrigerant				R410A / 8.5kg	R410A / 11.0kg

GLOBAL REMARKS	Cooling	Heating
Rating conditions		
Inside air temperature	27ºC DB / 19ºC WB	20ºC DB
Outside air temperature	35ºC DB / 24ºC WB	7ºC DB / 6ºC WB

DB: Dry Bulb; WB: Wet Bulb

1 These values are at 400V only. For 380V and 415V specifications, please refer to the technical data book.
2 Add 40mm for discharge grille.

Power	8HP	10HP
Reference	U-8EA1E8	U-10EA1E8
Maximum combination of indoor unit	13	16
Power rates (kW)	11.2 - 22.4 - 29.1	14.0 - 28.0 - 36.4
Power supply (V/Hz)	380 - 415 / 50	380 - 415 / 50

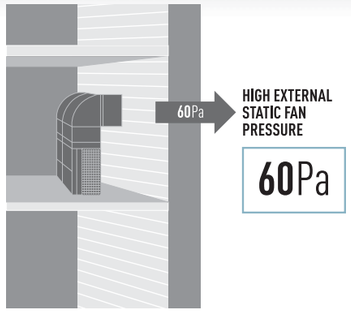

U-8LA1E8 // U-10LA1E8

Control Flexibility
- Cooling/Heating Selector
- Demand Control Input (LV1/LV2/LV3)
- Forced STOP Input
- Cooling Only Model Setting (by jumper line cut)
- Power Save Mode
- Outdoor Unit Silent Operation Mode
- Auto Restart

Field Service & Maintenance
- Cooling Operation TESTRUN
- Heating Operation TESTRUN
- Automatic Adress Resetting
- Self Diagnosis Function (LED display)

(unit: mm)

MODEL			
10 H.P.	326	9.52 FLARE	22.22 BRAZING
8 H.P.	196*		19.05 BRAZING
	A	LIQUID SIDE	GAS SIDE
	CONNECTING PIPE		

* DIMENSION WHEN USE THE ACCESSORY PIPE

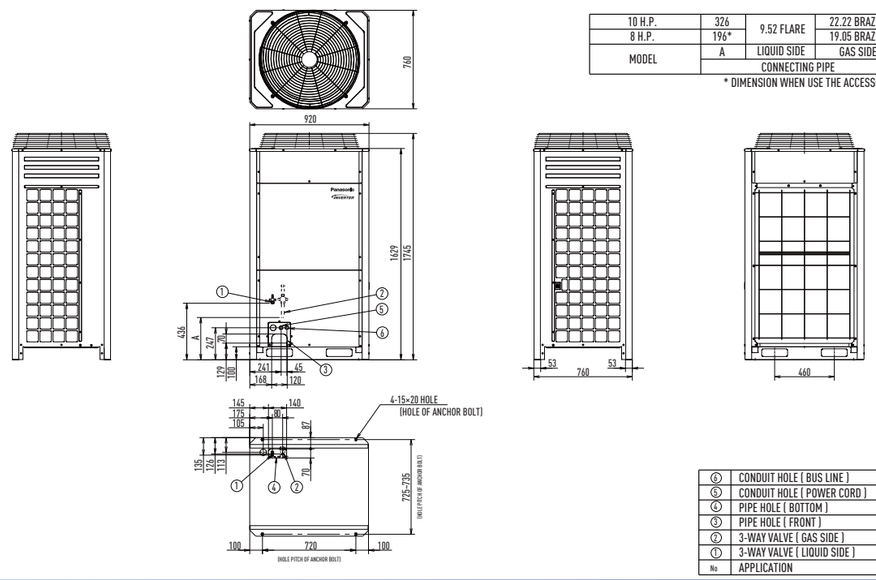

⑥	CONDUIT HOLE (BUS LINE)
⑤	CONDUIT HOLE (POWER CORD)
④	PIPE HOLE (BOTTOM)
③	PIPE HOLE (FRONT)
②	3-WAY VALVE (GAS SIDE)
①	3-WAY VALVE (LIQUID SIDE)
№	APPLICATION

RANGE OF INDOOR UNITS

		REFRIGERANT	0.8HP	1.0HP	1.25HP	1.5HP	1.75HP	2.0HP	2.5HP	3.0HP	3.5HP	4HP	4.5HP
Capacity	Cooling		2.2kW/7,500Btu/h	2.8kW/9,600Btu/h	3.2kW/10,900Btu/h	3.6kW/12,300Btu/h	4.5kW/15,400Btu/h	5.6kW/19,100Btu/h	6.3kW/21,500Btu/h	7.1kW/24,200Btu/h	9.0kW/30,700Btu/h	10.0kW	12.5kW
	Heating		2.5kW/8,500Btu/h	3.2kW/10,900Btu/h	3.6kW/12,300Btu/h	4.2kW/14,300Btu/h	5.1kW/17,400Btu/h	6.4kW/21,800Btu/h	7.1kW/24,200Btu/h	8.0kW/27,300Btu/h	10.0kW/34,100Btu/h	11.2kW	14.0kW
WALL-MOUNTED TYPE	White colour	R410A	S-22KA1E5	S-28KA1E5		S-36KA1E5	S-45KA1E5	S-56KA1E5	S-63KA1E5	S-71KA1E5			
	Silver colour	R410A	S-22KA1E5S	S-28KA1E5S		S-36KA1E5S	S-45KA1E5S						
CASSETTE TYPE		R410A							S-63UA1E5	S-71UA1E5	S-90UA1E5	NEW 2011 S-100UA1E5	NEW 2011 S-125UA1E5
60X 60 CASSETTE TYPE		R410A	S-22YA1E5	S-28YA1E5		S-36YA1E5	S-45YA1E5	S-56YA1E5					
LOW-SILHOUETTE DUCT TYPE (LOW STATIC PRESSURE TYPE)		R410A	S-22NA1E5	S-28NA1E5	S-32NA1E5	S-36NA1E5	S-45NA1E5	S-56NA1E5					
LOW-SILHOUETTE DUCT TYPE (MID STATIC PRESSURE TYPE)		R410A					S-45MA1E5	S-56MA1E5	S-63MA1E5	S-71MA1E5	S-90MA1E5	NEW 2011 S-100MA1E5	NEW 2011 S-125MA1E5

RANGE OF OUTDOOR UNITS

		REFRIGERANT	4.0HP	5.0HP	6.0HP	8.0HP	10.0HP
CAPACITY	Cooling		11.2kW/38,200Btu/h	14.0kW/47,800Btu/h	15.5kW/52,900Btu/h	22.4kW/76,000Btu/h	28.0kW/95,000Btu/h
	Heating		12.5kW/42,700Btu/h	16.0kW/54,600Btu/h	18.0kW/61,400Btu/h	25.0kW	31.5kW
OUTDOOR UNIT		R410A	U-4LA1E5	U-5LA1E5	U-6LA1E5	NEW 2011 U-8EA1E8	NEW 2011 U-10EA1E8

FEATURE COMPARISON

INDOOR UNITS

Model	Indoor Unit	Wall Mounted		60X60 Cassette		Cassette		Duct (Low Static Pressure)		Duct (Mid Static Pressure)	
				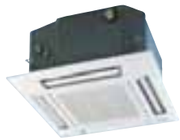							
Feature	**Remote Controller**	**Wired Remote Controller**	**Infrared Remote Controller**	**Wired Remote Controller**	**Infrared Remote Controller**	**Wired Remote Controller**	**Infrared Remote Controller**	**Wired Remote Controller**	**Infrared Remote Controller**	**Wired Remote Controller**	**Infrared Remote Controller**
Control Flexibility	24-Hours ON/OFF Real Setting Timer	✘	✘	✘	✘	✘	✘	✘	✘	✘	✘
	Weekly Timer (6-Pattern/Max. 42-Pattern with Temp Setting)	✘		✘		✘		✘		✘	
	Group Control by Single Remote Controller	✘	✘	✘	✘	✘	✘	✘	✘	✘	✘
	Outdoor Unit Silent Operation Mode (3-Level)	✘	✘	✘	✘	✘	✘	✘	✘	✘	✘
	Indoor Unit Thermistor Switching (Indoor Unit or RC)	✘		✘		✘		✘		✘	
	Ventilation Unit Control	✘		✘		✘		✘		✘	
	Digital Input/Output Contact			with CZ-TA31P	with CZ-TA31P	with CZ-TA31P	with CZ-TA31P	with CZ-TA31P	with CZ-TA31P	with CZ-TA31P	with CZ-TA31P
Comfortability	Filter Sign	✘	✘	✘	✘	✘	✘	✘	✘	✘	✘
	Hot Start Control	✘	✘	✘	✘	✘	✘	✘	✘	✘	✘
	Filter	✘	✘	✘	✘	✘	✘	✘	✘		
	Super alleru-buster filter (optional)	CZ-SA16P (10 years)	CZ-SA16P (10 years)	CZ-SA13P (3 years)	CZ-SA13P (3 years)						
Field Service & Maintenance	Indoor Unit Address Setting	✘	✘	✘	✘	✘	✘	✘	✘	✘	✘
	Outdoor Unit Address Setting	✘	✘	✘	✘	✘	✘	✘	✘	✘	✘
	Indoor Unit Test Run Mode	✘	✘	✘	✘	✘	✘	✘	✘	✘	✘
	Emergency Operation		✘		✘		✘		✘		✘
	Self Diagnosis Function	✘	✘	✘	✘	✘	✘	✘	✘	✘	✘
	Self Diagnosis Records	✘		✘		✘		✘		✘	

OUTDOOR UNITS

Model	Outdoor Unit	4-6 HP	8-10 HP
Control Flexibility	"Cooling Only" Model Setting (Locked)	✘	✘
	Power Save Mode	✘	✘
	Outdoor Unit Silent Operation Mode (3-Level)	✘	✘
	Auto Restart	✘	✘
Field Service & Maintenance	Pump Down Operation	✘	
	Cooling Operation TESTRUN	✘	✘
	Heating Operation TESTRUN	✘	✘
	Automatic Address Resetting	✘	✘
	Self Diagnosis Function	✘ (LED display)	✘ (LED display)
Digital Input/Output	Cooling/Heating Selector (optional)	✘	✘
	Demand Control Input (3 Levels Demand Control Input)	✘	✘
	Forced Stop Input	✘	✘

4-6 HP

8-10 HP

TECHNICAL ZOOM

- FLEXIBLE INSTALLATION
- EFFECTIVE LONG-LIFE FILTER
- SELF DIAGNOSIS FUNCTION WITH 7-SEG CODE DISPLAY

WALL-MOUNTED TYPE // SILVER COLOUR

FS MULTI WALL-MOUNTED TYPE AIR CONDITIONERS HAVE BEEN DESIGNED IN A BEAUTIFUL AND STYLISH WAY. The fresh new horizontal curved form characterizes the air conditioner's new design. The gentle curve at the centre stylishly conceals the complex high-performance mechanisms inside, while thin ends emphasize the air conditioner's slim style. This allows it to blend into the wall in an attractive manner, and to add harmony to virtually any room interior.

maximum flexibility VRF | A class energy saving INVERTER+ | environmentally friendly refrigerant R410A

				0.8HP	1.0HP	1.5HP	1.75HP
INDOOR				S-22KA1E5S	S-28KA1E5S	S-36KA1E5S	S-45KA1E5S
Power Source			phase	1ø	1ø	1ø	1ø
			V	220-230-240	220-230-240	220-230-240	220-230-240
			Hz	50 Hz	50 Hz	50 Hz	50 Hz
Cooling	Capacity		kW [Btu/h]	2.20 [7,500]	2.80 [9,600]	3.60 [12,300]	4.50 [15,400]
	Power Input		W	25	27	30	35
	Current		A	0.25	0.30	0.35	0.40
	Air Volume	Hi	m³/min [ft³/min]	9.5 [335]	9.7 [342]	10.9 [385]	11.3 [399]
	Sound Pressure Level	Hi/Lo	dB [A]	38/33	39/33	42/34	43/35
	Sound Power Level	Hi/Lo	dB	53/48	54/48	57/49	58/50
Heating	Capacity		kW [Btu/h]	2.50 [8,500]	3.20 [10,900]	4.20 [14,300]	5.10 [17,400]
	Power Input		W	25	27	30	35
	Current		A	0.25	0.30	0.35	0.40
	Air Volume	Hi	m³/min [ft³/min]	10.3 [364]	10.9 [385]	11.6 [409]	12.1 [427]
	Sound Pressure Level	Hi/Lo	dB [A]	38/33	39/33	42/34	43/35
	Sound Power Level	Hi/Lo	dB	53/48	54/48	57/49	58/50
Moisture Removal Volume			L/h [Pt/h]	1.3 [2.7]	1.6 [3.4]	2.1 [4.4]	2.5 [5.3]
Dimensions	H x W x D		mm	290 x 870 x 204	290 x 870 x 204	290 x 870 x 204	290 x 870 x 204
			inch	11-7/16 x 34-9/32 x 8-1/16	11-7/16 x 34-9/32 x 8-1/16	11-7/16 x 34-9/32 x 8-1/16	11-7/16 x 34-9/32 x 8-1/16
Net Weight			kg [lb]	9 [20]	9 [20]	9 [20]	9 [20]
Piping Connection	Liquid Side		mm [inch]	ø6.35 [1/4]	ø6.35 [1/4]	ø6.35 [1/4]	ø6.35 [1/4]
	Gas Side		mm [inch]	ø12.7 [1/2]	ø12.7 [1/2]	ø12.7 [1/2]	ø12.7 [1/2]

GLOBAL REMARKS	Rating conditions	Cooling	Heating
	Inside air temperature	27ºC DB / 19ºC WB	20ºC DB
	Outside air temperature	35ºC DB / 24ºC WB	7ºC DB / 6ºC WB

Before installing in quiet room such as a bedroom, please consult with an authorized distributor.

DB: Dry Bulb; WB: Wet Bulb

FLEXIBLE INSTALLATION

Panasonic wall mounted model, compact and stylish design, is installable in a very limited space, without the feeling of pressure, it can integrate into your stylish room interior.

EFFECTIVE LONG-LIFE FILTER

This long-life filter can trap dust mites, tobacco smoke and other common pollutants effectively. When it catches certain airborne particles, the clean-indicator will remind you to clean. You can remove the filter quickly with a simple one step operation, after cleaning, it can be replaced back.

OPTIONAL ACCESSORIES

SUPER alleru-buster filter - 10 - year filter life

CZ-SA16P
Replacement: every 10 years

SELF DIAGNOSIS FUNCTION WITH 7-SEG CODE DISPLAY

When the air conditioner has trouble the indicator and 7-seg code displays on the panel making it easier for service technicians to diagnose problems.

S-22KA1E5S // S-28KA1E5S // S-36KA1E5S // S-45KA1E5S

Control Flexibility
- 24-Hours ON/OFF Real Setting Timer
- Weekly Timer (Wired Only)
- Group Control by Single Remote Controller
- Outdoor Unit Silent Operation Mode
- Indoor Unit Thermistor Switching (Wired Only)
- Ventilation Unit Control (Wired Only)

Comfortability
- Filter Sign
- Hot Start Control
- Filter
- Super alleru-buster filter (optional/10-year lifetime)

Field Service & Maintenance
- Indoor Unit Address Setting
- Outdoor Unit Address Setting
- Automatic Address Resetting for Group Control (Wired Only)
- Indoor Unit Test Run Mode
- Emergency Operation (Infrared Only)
- Self Diagnosis Function
- Self Diagnosis Records (Wired Only)

* Wired: Wired Remote Controller / Infrared: Infrared Remote Controller.

0.8HP - 1.75HP MODELS

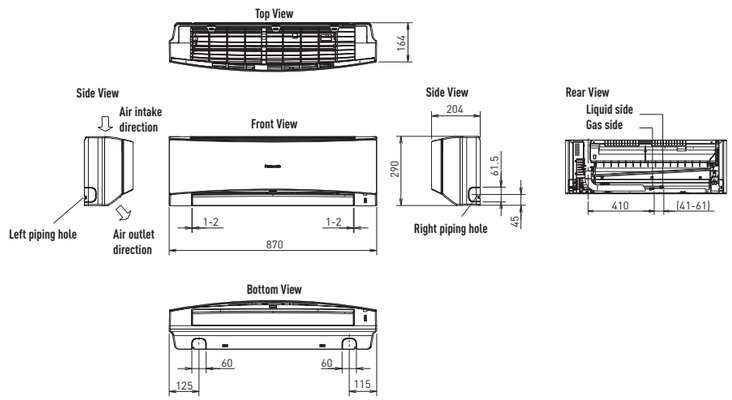

TECHNICAL ZOOM

- FLEXIBLE INSTALLATION
- EFFECTIVE LONG-LIFE FILTER
- SELF DIAGNOSIS FUNCTION WITH 7-SEG CODE DISPLAY

WALL-MOUNTED TYPE // WHITE COLOUR // WHITE COLOUR -WIDE TYPE-

FS MULTI WALL-MOUNTED TYPE AIR CONDITIONERS HAVE BEEN DESIGNED IN A BEAUTIFUL AND STYLISH WAY. The fresh new horizontal curved form characterizes the air conditioner's new design. The gentle curve at the centre stylishly conceals the complex high-performance mechanisms inside, while thin ends emphasize the air conditioner's slim style. This allows it to blend into the wall in an attractive manner, and to add harmony to virtually any room interior.

maximum flexibility VRF | A class energy saving INVERTER+ | environmentally friendly refrigerant R410A

WHITE COLOUR -WIDE TYPE-

WHITE COLOUR

				0.8HP	1.0HP	1.5HP	1.75HP	2.0HP	2.5HP	3.0HP
Indoor				S-22KA1E5	S-28KA1E5	S-36KA1E5	S-45KA1E5	S-56KA1E5	S-63KA1E5	S-71KA1E5
Power Source			phase	1ø	1ø	1ø	1ø	1ø	1ø	1ø
			V	220-230-240	220-230-240	220-230-240	220-230-240	220-230-240	220-230-240	220-230-240
			Hz	50 Hz	50 Hz	50 Hz	50 Hz	50 Hz	50 Hz	50 Hz
Cooling	Capacity		kW [Btu/h]	2.20 [7,500]	2.80 [9,600]	3.60 [12,300]	4.50 [15,400]	5.60 [19,100]	6.30 [21,500]	7.10 [24,200]
	Power Input		W	25	27	30	35	45	50	55
	Current		A	0.25	0.30	0.35	0.40	0.40	0.45	0.50
	Air Volume	Hi	m^3/min [ft^3/min]	9.5 [335]	9.7 [342]	10.9 [385]	11.3 [399]	15.3 [540]	16.0 [565]	17.4 [614]
	Sound Pressure Level	Hi/Lo	dB [A]	38/33	39/33	42/34	43/35	44/38	46/39	48/40
	Sound Power Level	Hi/Lo	dB	53/48	54/48	57/49	58/50	59/53	61/54	63/55
Heating	Capacity		kW [Btu/h]	2.50 [8,500]	3.20 [10,900]	4.20 [14,300]	5.10 [17,400]	6.40 [21,800]	7.10 [24,200]	8.00 [27,300]
	Power Input		W	25	27	30	35	45	50	55
	Current		A	0.25	0.30	0.35	0.40	0.40	0.45	0.50
	Air Volume	Hi	m^3/min [ft^3/min]	10.3 [364]	10.9 [385]	11.6 [409]	12.1 [427]	16.7 [590]	17.1 [604]	18.3 [648]
	Sound Pressure Level	Hi/Lo	dB [A]	38/33	39/33	42/34	43/35	44/38	46/39	48/40
	Sound Power Level	Hi/Lo	dB	53/48	54/48	57/49	58/50	59/53	61/54	63/55
Moisture Removal Volume			L/h [Pt/h]	1.3 [2.7]	1.6 [3.4]	2.1 [4.4]	2.5 [5.3]	3.2 [6.7]	3.6 [7.6]	4.2 [8.8]
Dimensions	H x W x D		mm	290 x 870 x 204	290 x 870 x 204	290 x 870 x 204	290 x 870 x 204	290 x 1,070 x 235	290 x 1,070 x 235	290 x 1,070 x 235
			inch	11-7/16 x 34-9/32 x 8-1/16	11-7/16 x 34-9/32 x 8-1/16	11-7/16 x 34-9/32 x 8-1/16	11-7/16 x 34-9/32 x 8-1/16	11-7/16 x 42-5/32 x 9-9/32	11-7/16 x 42-5/32 x 9-9/32	11-7/16 x 42-5/32 x 9-9/32
Net Weight			kg [lb]	9 [20]	9 [20]	9 [20]	9 [20]	11 [24]	12 [26]	12 [26]
Piping Connection	Liquid Side		mm [inch]	ø6.35 [1/4]	ø6.35 [1/4]	ø6.35 [1/4]	ø6.35 [1/4]	ø6.35 [1/4]	ø6.35 [1/4]	ø9.52 [3/8]
	Gas Side		mm [inch]	ø12.7 [1/2]	ø12.7 [1/2]	ø12.7 [1/2]	ø12.7 [1/2]	ø12.7 [1/2]	ø12.7 [1/2]	ø15.88 [5/8]

GLOBAL REMARKS		Cooling	Heating
	Rating conditions		
	Inside air temperature	27ºC DB / 19ºC WB	20ºC DB
	Outside air temperature	35ºC DB / 24ºC WB	7ºC DB / 6ºC WB

DB: Dry Bulb; WB: Wet Bulb

Before installing in quiet room such as a bedroom, please consult with an authorized distributer.

FLEXIBLE INSTALLATION

Panasonic wall mounted model, compact and stylish design, is installable in a very limited space, without the feeling of pressure, it can integrate into your stylish room interior.

EFFECTIVE LONG-LIFE FILTER

This long-life filter can trap dust mites, tobacco smoke and other common pollutants effectively. When it catches certain airborne particles, the clean-indicator will remind you to clean. You can remove the filter quickly with a simple one step operation, after cleaning, it can be replaced back.

OPTIONAL ACCESSORIES

SUPER alleru-buster filter - 10 - year filter life

CZ-SA16P
Replacement: every 10 years

SELF DIAGNOSIS FUNCTION WITH 7-SEG CODE DISPLAY

When the air conditioner has trouble the indicator and 7-seg code displays on the panel making it easier for service technicians to diagnose problems.

S-22KA1E5 // S-28KA1E5 // S-36KA1E5 // S-45KA1E5 // S-56KA1E5 // S-63KA1E5 // S-71KA1E5

Control Flexibility
- 24-Hours ON/OFF Real Setting Timer
- Weekly Timer (Wired Only)
- Group Control by Single Remote Controller
- Outdoor Unit Silent Operation Mode
- Indoor Unit Thermistor Switching (Wired Only)
- Ventilation Unit Control (Wired Only)

Comfortability
- Filter Sign
- Hot Start Control
- Filter
- Super alleru-buster filter (optional/10-year lifetime)

Field Service & Maintenance
- Indoor Unit Address Setting
- Outdoor Unit Address Setting
- Automatic Address Resetting for Group Control (Wired Only)
- Indoor Unit Test Run Mode
- Emergency Operation (Infrared Only)
- Self Diagnosis Function
- Self Diagnosis Records (Wired Only)

* Wired: Wired Remote Controller / Infrared: Infrared Remote Controller.

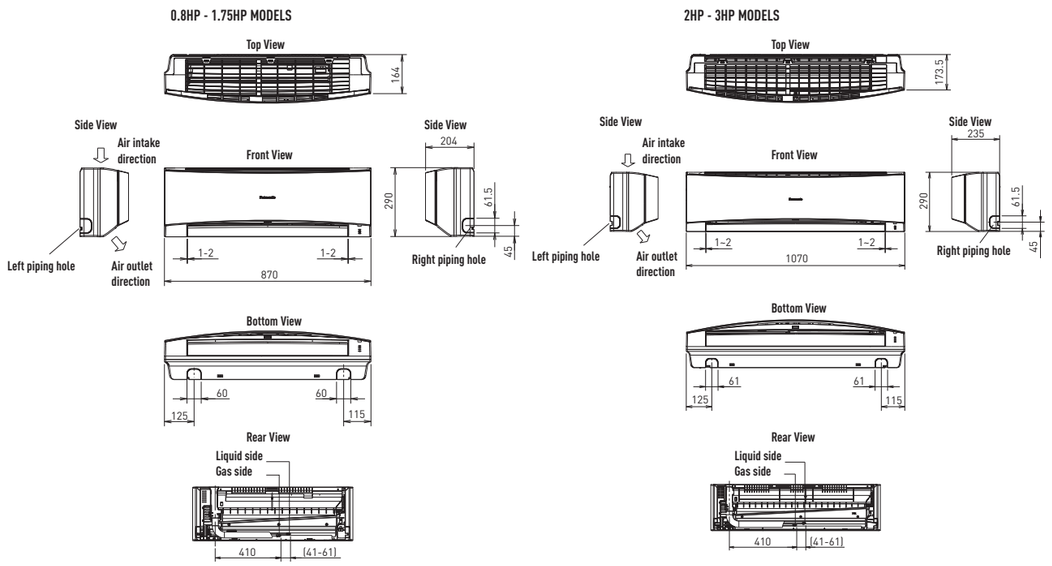

TECHNICAL ZOOM

- COMPACT DESIGN ALLOWS SPACE SAVING!
- SELF DIAGNOSIS FUNCTION WITH 7-SEG CODE DISPLAY
- ONLY 260 mm THIN
- 750 mm DRAIN-UP MECHANISM
- ANTI-MOULD LONG-LIFE AIR FILTER

CASSETTE (60X60) TYPE

4-WAY AIRFLOW COMFORT WITH ELEGANT, COMPACT PANEL

maximum flexibility VRF

A class energy saving INVERTER+

environmentally friendly refrigerant R410A

				0.8HP	1.0HP	1.5HP	1.75HP	2.0HP
INDOOR				S-22YA1E5	S-28YA1E5	S-36YA1E5	S-45YA1E5	S-56YA1E5
Panel				CZ-KPY1	CZ-KPY1	CZ-KPY1	CZ-KPY1	CZ-KPY1
Power Source			phase	1ø	1ø	1ø	1ø	1ø
			V	220-230-240	220-230-240	220-230-240	220-230-240	220-230-240
			Hz	50Hz	50Hz	50Hz	50Hz	50Hz
Cooling	Capacity		kW [Btu/h]	2.20 [7,500]	2.80 [9,600]	3.60 [12,300]	4.50 [15,400]	5.60 [19,100]
	Power Input		W	35	35	40	40	45
	Current		A	0.30	0.30	0.35	0.35	0.35
	Air Volume	Hi	m³/min [ft³/min]	8.3 [293]	8.6 [304]	9.0 [318]	9.3 [328]	9.9 [349]
	Sound Pressure Level	Hi/Lo	dB [A]	36/33	37/33	38/34	39/35	40/36
	Sound Power Level	Hi/Lo	dB	51/48	52/48	53/49	54/50	55/51
Heating	Capacity		kW [Btu/h]	2.50 [8,500]	3.20 [10,900]	4.20 [14,300]	5.10 [17,400]	6.40 [21,800]
	Power Input		W	35	35	40	40	45
	Current		A	0.30	0.30	0.35	0.35	0.35
	Air Volume	Hi	m³/min [ft³/min]	9.3 [328]	9.6 [339]	9.9 [349]	10.3 [364]	10.6 [374]
	Sound Pressure Level	Hi/Lo	dB [A]	36/33	37/33	38/34	39/35	40/36
	Sound Power Level	Hi/Lo	dB	51/48	52/48	53/49	54/50	55/51
Moisture Removal Volume			L/h [Pt/h]	1.3 [2.7]	1.6 [3.4]	2.1 [4.4]	2.5 [5.3]	3.2 [6.7]
Dimensions (H x W x D)	Indoor unit		mm	260 x 575 x 575	260 x 575 x 575	260 x 575 x 575	260 x 575 x 575	260 x 575 x 575
			inch	10-1/4 x 22-21/32 x 22-21/32	10-1/4 x 22-21/32 x 22-21/32	10-1/4 x 22-21/32 x 22-21/32	10-1/4 x 22-21/32 x 22-21/32	101/4 x 22-21/32 x 22-21/32
	Panel		mm	51x700x700	51x700x700	51x700x700	51x700x700	51x700x700
Net Weight			kg [lb]	18 [40]	18 [40]	18 [40]	18 [40]	18 [40]
Piping Connection	Liquid Side		mm [inch]	ø6.35 [1/4]	ø6.35 [1/4]	ø6.35 [1/4]	ø6.35 [1/4]	ø6.35 [1/4]
	Gas Side		mm [inch]	ø12.7 [1/2]	ø12.7 [1/2]	ø12.7 [1/2]	ø12.7 [1/2]	ø12.7 [1/2]

GLOBAL REMARKS	Cooling	Heating
Rating conditions		
Inside air temperature	27ºC DB / 19ºC WB	20ºC DB
Outside air temperature	35ºC DB / 24ºC WB	7ºC DB / 6ºC WB

DB: Dry Bulb; WB: Wet Bulb

COMPACT DESIGN ALLOWS SPACE SAVING!

The panel is a compact 70x70cm so it can be installed even in a small room where space is limited. The ceiling space required is 65x65cm.

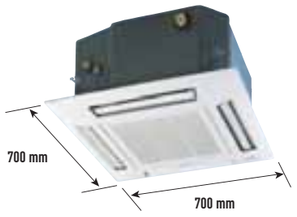

SELF DIAGNOSIS FUNCTION WITH 7-SEG CODE DISPLAY

When the air conditioner has trouble the indicator and 7-seg code displays on the panel making it easier for service technicians to diagnose problems.

ONLY 260 MM THIN AND 750 MM DRAIN-UP MECHANISM

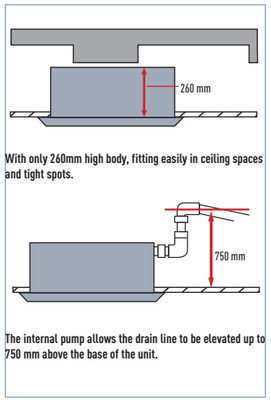

With only 260mm high body, fitting easily in ceiling spaces and tight spots.

The internal pump allows the drain line to be elevated up to 750 mm above the base of the unit.

ANTI-MOULD LONG-LIFE AIR FILTER

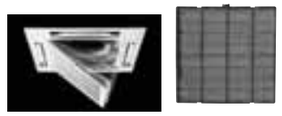

* For optimum comfort, we recommend cleaning the air filter every 1.5 months.

OPTIONAL ACCESSORIES

SUPER alleru-buster filter
CZ-SA13P
Replacement: every 3 years

S-22YA1E5 // S-28YA1E5 // S-36YA1E5 // S-45YA1E5 // S-56YA1E5

Control Flexibility
- 24-Hours ON/OFF Real Setting Timer
- Weekly Timer (Wired Only)
- Group Control by Single Remote Controller
- Outdoor Unit Silent Operation Mode
- Indoor Unit Thermistor Switching (Wired Only)
- Ventilation Unit Control (Wired Only)
- Digital Input/Output Contact - with CZ-TA31P (Optional)

Comfortability
- Filter Sign
- Mildew-Proofing Drain pan
- Hot Start Control
- Filter
- Super alleru-buster filter (optional/3-year lifetime)

Field Service & Maintenance
- Indoor Unit Address Setting
- Outdoor Unit Address Setting
- Automatic Address Resetting for Group Control (Wired Only)
- Indoor Unit Test Run Mode
- Emergency Operation (Infrared Only)
- Self Diagnosis Function
- Self Diagnosis Records (Wired Only)

* Wired: Wired Remote Controller / Infrared: Infrared Remote Controller.

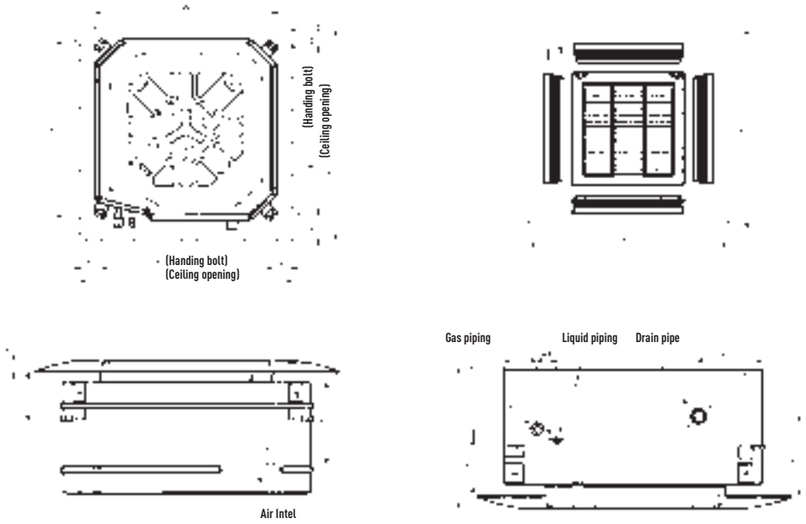

TECHNICAL ZOOM

- SELF DIAGNOSIS FUNCTION WITH 7-SEG CODE DISPLAY
- ONLY 246 mm THIN
- 750 mm DRAIN-UP MECHANISM
- ELEGANT PANEL, 4-DIRECTION BLOW
- THREE AIRFLOW PATTERNS FOR EXTRA COMFORT
- FLEXIBLE PIPING LAYOUT
- ANTI-MOULD LONG-LIFE AIR FILTER
- INNOVATIVE DESIGN CREATES EXTRA QUIET OPERATION

CASSETTE TYPE (90X90)

4-WAY AIRFLOW, POWERFUL, AND COMPACT (ONLY 246CM HIGH)

maximum flexibility VRF

A class energy saving INVERTER+

environmentally friendly refrigerant R410A

				2.5HP	3.0HP	3.5HP	4.0HP NEW 2011	4.5HP NEW 2011
INDOOR				S-63UA1E5	S-71UA1E5	S-90UA1E5	S-100UA1E5	S-125UA1E5
Panel				CZ-BT03P	CZ-BT03P	CZ-BT03P	CZ-BT03P	CZ-BT03P
Power Source			phase	1ø	1ø	1ø	1ø	1ø
			V	220-230-240	220-230-240	220-230-240	220-230-240	220-230-240
			Hz	50Hz	50Hz	50Hz	50Hz	50Hz
Cooling	Capacity		kW [Btu/h]	6.30 [21,500]	7.10 [24,200]	9.00 [30,700]	10.00 [34,100]	12.50 [42,700]
	Power Input [1]		W	110	115	115	205	205
	Current [1]		A	0.50	0.55	0.55	1.05	1.05
	Air Volume	Hi	m³/min [ft³/min]	21 [741]	22 [777]	22 [777]	30 [1,059]	30 [1,059]
	Sound Pressure Level [1]	Hi/Lo	dB [A]	41/35	42/36	42/36	48/43	48/43
	Sound Power Level [1]	Hi/Lo	dB	56/50	57/51	57/51	63/58	63/58
Heating	Capacity		kW [Btu/h]	7.10 [24,200]	8.00 [27,300]	10.00 [34,100]	11.20 [38,200]	14.00 [47,800]
	Power Input [1]		W	110	115	115	205	205
	Current [1]		A	0.50	0.55	0.55	1.05	1.05
	Air Volume	Hi	m³/min [ft³/min]	21 [741]	22 [777]	22 [777]	30 [1,059]	30 [1,059]
	Sound Pressure Level [1]	Hi/Lo	dB [A]	41/35	42/36	42/36	48/43	48/43
	Sound Power Level [1]	Hi/Lo	dB	56/50	57/51	57/51	63/58	63/58
Moisture Removal Volume			L/h [Pt/h]	3.6 [7.6]	4.2 [8.8]	5.4 [11.3]	6.0 [12.6]	7.9 [16.6]
Dimensions (H x W x D)	Indoor unit		mm	246 x 840 x 840	246 x 840 x 840	246 x 840 x 840	288×840×840	288×840×840
			inch	9-11/16 x 33-1/16 x 33/1/16	9-11/16 x 33-1/16 x 33/1/16	9-11/16 x 33-1/16 x 33/1/16	11-11/32×33-1/16×33-1/16	11-11/32×33-1/16×33-1/16
	Panel		mm	45x950x950	45x950x950	45x950x950		
Net Weight			kg [lb]	26 [57]	26 [57]	26 [57]	30 [66]	30 [66]
Piping Connection	Liquid Side		mm [inch]	ø6.35 [1/4]	ø9.52 [3/8]	ø9.52 [3/8]	ø9.52 [3/8]	ø9.52 [3/8]
	Gas Side		mm [inch]	ø12.7 [1/2]	ø15.88 [5/8]	ø15.88 [5/8]	ø15.88 [5/8]	ø15.88 [5/8]

GLOBAL REMARKS	Cooling	Heating
Rating conditions		
Inside air temperature	27ºC DB / 19ºC WB	20ºC DB
Outside air temperature	35ºC DB / 24ºC WB	7ºC DB / 6ºC WB

1 These values are at 230V only. For 220V and 240V specifications, please refer to the technical data book.

DB: Dry Bulb; WB: Wet Bulb

ONLY 246 mm THIN AND 750 mm DRAIN-UP MECHANISM

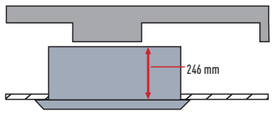

With only 246 mm high body, fitting easily in ceiling spaces and tight spots.

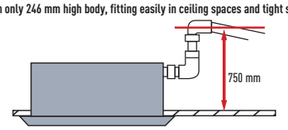

The internal pump allows the drain line to be elevated up to 750 mm above the base of the unit.

THREE AIRFLOW PATTERNS FOR EXTRA COMFORT

- Multi-Comfort Air Control

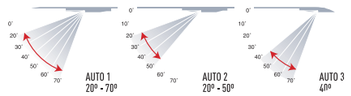

ELEGANT PANEL, 4-DIRECTION BLOW

The thin and delicate body can be totally hidden in the ceiling, only leaving its elegant panel outside to decorate your room. The 4-direction blow can deliver airflows evenly throughout the room, eliminating the temperature difference.

SELF DIAGNOSIS FUNCTION WITH 7-SEG CODE DISPLAY

When the air conditioner has trouble the indicator and 7-seg code displays on the panel making it easier for service technicians to diagnose problems.

FLEXIBLE PIPING LAYOUT

Drainpipe and refrigerant pipe distributed on the different sides of the unit, giving more flexibility of piping layout. Its excellent inside heat-protection material effectively avoids frost and water-leakage, and reduces the damage possibility in the transportation.

INNOVATIVE DESIGN CREATES EXTRA QUIET OPERATION

More Denoising Material

Adopting denoising material inside, improving the seal quality to isolate and reduce the operation noises.

S-63UA1E5 // S-71UA1E5 // S-90UA1E5 // S-100UA1E5 // S-125UA1E5

Control Flexibility
- 24-Hours ON/OFF Real Setting Timer
- Weekly Timer (Wired Only)
- Group Control by Single Remote Controller
- Outdoor Unit Silent Operation Mode
- Indoor Unit Thermistor Switching (Wired Only)
- Ventilation Unit Control (Wired Only)
- Digital Input/Output Contact - with CZ-TA31P (Optional)

Comfortability
- Filter Sign
- Mildew-Proofing Drain pan
- Hot Start Control
- Filter

Field Service & Maintenance
- Indoor Unit Address Setting
- Outdoor Unit Address Setting
- Automatic Address Resetting for Group Control (Wired Only)
- Indoor Unit Test Run Mode
- Emergency Operation (Infrared Only)
- Self Diagnosis Function
- Self Diagnosis Records (Wired Only)

* Wired: Wired Remote Controller / Infrared: Infrared Remote Controller.

SPACE NEEDED FOR INSTALLATION

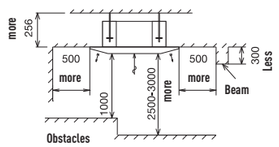

DRAINAGE

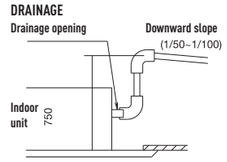

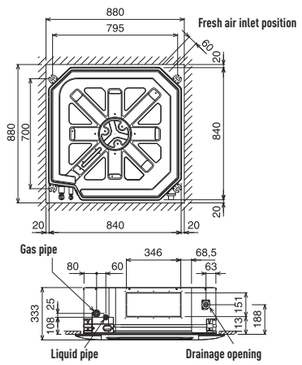

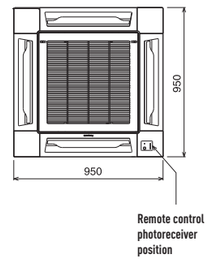

TECHNICAL ZOOM

- ULTRA-THIN, DUCT-TYPE INDOOR UNIT
- ULTRA-THIN 20 cm DESIGN: FITS IN EVEN WHERE CEILING HEIGHT IS LIMITED
- BUILT-IN SELECTABLE STATIC PRESSURE SETTINGS
- THOROUGHLY CONSIDERED CONNECTING FLANGE DESIGN

LOW-SILHOUETTE // DUCT TYPE // LOW STATIC PRESSURE TYPE

OFFERS MAXIMUM INSTALLATION FLEXIBILITY WITH SLIM, LIGHTWEIGHT DESIGN (WITH ONLY 200MM HIGH!) IDEAL FOR HOTELS AND OFFICES.

maximum flexibility VRF | A class energy saving INVERTER+ | environmentally friendly refrigerant R410A

				0.8HP	1.0HP	1.25HP	1.5HP	1.75HP	2.0HP
INDOOR				S-22NA1E5	S-28NA1E5	S-32NA1E5	S-36NA1E5	S-45NA1E5	S-56NA1E5
Power Source			phase	1ø	1ø	1ø	1ø	1ø	1ø
			V	220-230-240	220-230-240	220-230-240	220-230-240	220-230-240	220-230-240
			Hz	50Hz	50Hz	50Hz	50Hz	50Hz	50Hz
Cooling	Capacity		kW [Btu/h]	2.20 [7,500]	2.80 [9,600]	3.20 [10,900]	3.60 [12,300]	4.50 [15,400]	5.60 [19,100]
	Power Input [1]		W	75	80	85	85	95	105
	Current [1]		A	0.40	0.45	0.45	0.45	0.50	0.50
	Air Volume	Hi	m³/min [ft³/min]	10 [353]	11 [388]	11 [388]	11 [388]	12 [424]	12.5 [441]
	Sound Pressure Level [1]	Hi/Lo	dB [A]	36/30	37/30	38/31	38/31	39/32	39/32
	Sound Power Level [1]	Hi/Lo	dB	51/45	52/45	53/46	53/46	54/47	54/47
Heating	Capacity		kW[Btu/h]	2.50 [8,500]	3.20 [10,900]	3.60 [12,300]	4.20 [14,300]	5.10 [17,400]	6.40 [21,800]
	Power Input [1]		W	75	80	85	85	95	105
	Current [1]		A	0.40	0.45	0.45	0.45	0.50	0.50
	Air Volume	Hi	m³/min [ft³/min]	10 [353]	11 [388]	11 [388]	11 [388]	12 [424]	12.5 [441]
	Sound Pressure Level [1]	Hi/Lo	dB [A]	36/30	37/30	38/31	38/31	39/32	39/32
	Sound Power Level [1]	Hi/Lo	dB	51/45	52/45	53/46	53/46	54/47	54/47
Moisture Removal Volume			L/h [Pt/h]	1.3 [2.7]	1.6 [3.4]	1.8 [3.8]	2.1 [4.4]	2.5 [5.3]	3.2 [6.7]
External Static Pressure [2]			Pa [mmAq]	0/29 [0/3]	0/29 [0/3]	0/29 [0/3]	0/29 [0/3]	0/29 [0/3]	0/29 [0/3]
Dimensions	H x W x D		mm	200 x 900 x 550	200 x 900 x 550	200 x 900 x 550	200 x 900 x 550	200 x 900 x 550	200 x 900 x 550
			inch	7-7/8 x 35-7/16 x 21-21/32	7-7/8 x 35-7/16 x 21-21/32	7-7/8 x 35-7/16 x 21-21/32	7-7/8 x 35-7/16 x 21-21/32	7-7/8 x 35-7/16 x 21-21/32	7-7/8 x 35-7/16 x 21-21/32
Net Weight			kg[lb]	21 [46]	21 [46]	22 [48]	22 [48]	22 [48]	22 [48]
Piping Connection	Liquid Side		mm [inch]	ø6.35 [1/4]	ø6.35 [1/4]	ø6.35 [1/4]	ø6.35 [1/4]	ø6.35 [1/4]	ø6.35 [1/4]
	Gas Side		mm [inch]	12.7 [1/2]	12.7 [1/2]	12.7 [1/2]	12.7 [1/2]	12.7 [1/2]	12.7 [1/2]

GLOBAL REMARKS		Cooling	Heating
	Rating conditions		
	Inside air temperature	27ºC DB / 19ºC WB	20ºC DB
	Outside air temperature	35ºC DB / 24ºC WB	7ºC DB / 6ºC WB

DB: Dry Bulb; WB: Wet Bulb

1 These values are at 230 V only. For 220 V and 240 V specifications, please refer to the technical data book.
2 The external static pressure is set to 0pa at factory default setting.

ULTRA-THIN, DUCT-TYPE INDOOR UNIT

The slim design of this ultra-thin, duct-type indoor unit is especially suited for rooms with partially or minimally dropped ceilings. Its space-saving design contributes to a brighter and more spacious living environment.

ULTRA-THIN 20 cm DESIGN: FITS IN EVEN WHERE CEILING HEIGHT IS LIMITED

Even where ceiling height is limited, the indoor units effectively fit in and provide a more spacious feel in most suspended ceiling situations. Occupying only 20 cm of vertical space and projecting only 55 cm, the unit can be installed in semi-dropped ceiling situations, thus helping to create spacious and comfortable surroundings.

Dropped Ceiling Effect

BUILT-IN SELECTABLE STATIC PRESSURE SETTINGS

Our ultra thin duct-type indoor units have two static pressure settings: 0 Pa and 29 Pa. In situations without ducting, the 0 Pa* static pressure setting is applicable. Where ducting is present, set the unit to 29 Pa* static pressure.

*0 Pa is the default setting: 29 Pa must be selected if required.

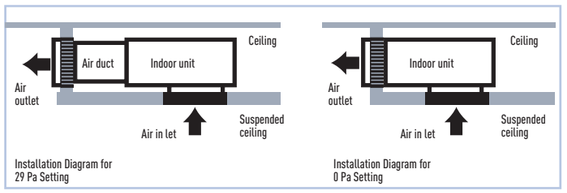

THOROUGHLY CONSIDERED CONNECTING FLANGE DESIGN

The addition of air duct connecting flanges on the indoor unit enables easy connection to short air ducts. Thus flange design both greatly simplifies installation and makes it easy to effectively seal the air duct.

S-22NA1E5 // S-28NA1E5 // S-32NA1E5 // S-36NA1E5 // S-45NA1E5 // S-56NA1E5

Control Flexibility
- 24-Hours ON/OFF Real Setting Timer
- Weekly Timer (Wired Only)
- Group Control by Single Remote Controller
- Outdoor Unit Silent Operation Mode
- Indoor Unit Thermistor Switching (Wired Only)
- Ventilation Unit Control (Wired Only)
- Digital Input/Output Contact - with CZ-TA31P (Optional)

Comfortability
- Filter Sign
- Hot Start Control

Field Service & Maintenance
- Indoor Unit Address Setting
- Outdoor Unit Address Setting
- Automatic Address Resetting for Group Control (Wired Only)
- Indoor Unit Test Run Mode
- Emergency Operation (Infrared Only)
- Self Diagnosis Function
- Self Diagnosis Records (Wired Only)

* Wired: Wired Remote Controller / Infrared: Infrared Remote Controller.

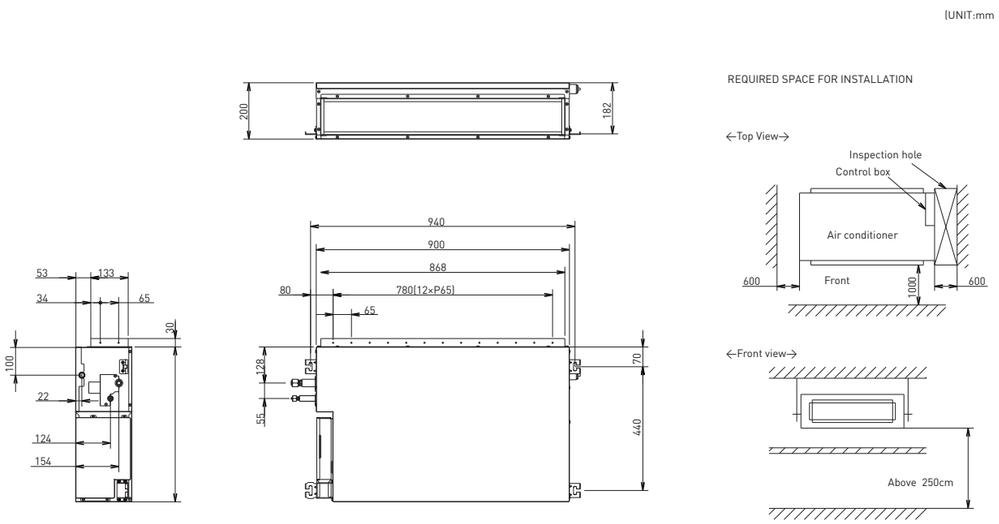

TECHNICAL ZOOM

- COMPACT, LIGHTWEIGHT DESIGN FOR EASY INSTALLATION
- 3-WAY REMOVABLE AIR FILTER
- VERSATILE AIR INLET AND DRAIN INSTALLATION
- STATIC PRESSURE SELECTION

LOW-SILHOUETTE // DUCT TYPE // MID STATIC PRESSURE TYPE

DUCT TYPE WITH A MAXIMUM OF 7MMAQ OF STATIC PRESSURE WITH A HIGH OF 250MM. COMPACT AND POWERFUL!

maximum flexibility VRF | A class energy saving INVERTER+ | environmentally friendly refrigerant R410A

NEW 2011 NEW 2011

				1.75 HP	2.0 HP	2.5 HP	3.0 HP	3.5 HP	4.0HP	4.5HP
INDOOR				S-45MA1E5	S-56MA1E5	S-63MA1E5	S-71MA1E5	S-90MA1E5	S-100MA1E5	S-125MA1E5
Power Source			phase	1ø	1ø	1ø	1ø	1ø	1ø	1ø
			V	220-230-240	220-230-240	220-230-240	220-230-240	220-230-240	220-230-240	220-230-240
			Hz	50Hz	50Hz	50Hz	50Hz	50Hz	50Hz	50Hz
Cooling	Capacity		kW [Btu/h]	4.50 [15,400]	5.60 [19,100]	6.30 [21,500]	7.10 [24,200]	9.00 [30,700]	10.00 [34,100]	12.50 [42,700]
	Power Input [1]		W	135	135	135	135	175	300	300
	Current [1]		A	0.60	0.60	0.60	0.60	0.80	1.35	1.35
	Air Volume	Hi	m³/min [ft³/min]	15 [530]	15 [530]	17 [600]	17 [600]	19 [671]	34 [1,201]	34 [1,201]
	Sound Pressure Level [1]	Hi/Lo	dB [A]	42/35	42/35	43/36	43/36	44/37	47/43	47/43
	Sound Power Level [1]	Hi/Lo	dB	57/50	57/50	58/51	58/51	59/52	62/58	62/58
Heating	Capacity		kW[Btu/h]	5.10 [17,400]	6.40 [21,800]	7.10 [24,200]	8.00 [27,300]	10.00 [34,100]	11.20 [38,200]	14.00 [47,800]
	Power Input [1]		W	135	135	135	135	175	300	300
	Current [1]		A	0.60	0.60	0.60	0.60	0.80	1.35	1.35
	Air Volume	Hi	m³/min [ft³/min]	15 [530]	15 [530]	17 [600]	17 [600]	19 [671]	34 [1,201]	34 [1,201]
	Sound Pressure Level [1]	Hi/Lo	dB [A]	42/35	42/35	43/36	43/36	44/37	47/43	47/43
	Sound Power Level [1]	Hi/Lo	dB	57/50	57/50	58/51	58/51	59/52	62/58	62/58
Moisture Removal Volume			L/h [Pt/h]	2.5 [5.3]	3.2 [6.7]	3.6 [7.6]	4.2 [8.8]	5.4 [11.3]	6.0 [12.6]	7.9 [16.6]
External Static Pressure [2]			Pa [mmAq]	49/69 [5/7]	49/69 [5/7]	49/69 [5/7]	49/69 [5/7]	49/69 [5/7]	49/69 [5/7]	49/69 [5/7]
Dimensions	H x W x D		mm	250×780(+100)[3]×650	250×780(+100)[3]×650	250×1,000(+100)[3]×650	250×1,000(+100)[3]×650	250×1,000(+100)[3]×650	250×1,200(+100)*3×650	250×1,200(+100)*3×650
			inch	9-27/32×30-23/32(+3-15/16) ×25-19/32	9-27/32×30-23/32(+3-15/16) ×25-19/32	9-27/32×39-3/8(+3-15/16) ×25-19/32	9-27/32×39-3/8(+3-15/16) ×25-19/32	9-27/32×39-3/8(+3-15/16) ×25-19/32	9-27/32 ×47-1/4(+3-15/16) ×25-19/32	9-27/32 ×47-1/4(+3-15/16) ×25-19/32
Net Weight			kg[lb]	28 [62]	28 [62]	32 [71]	32 [71]	32 [71]	41 [90]	41 [90]
Piping Connection	Liquid Side		mm [inch]	ø6.35 [1/4]	ø6.35 [1/4]	ø6.35 [1/4]	ø9.52 [3/8]	ø9.52 [3/8]	ø9.52 [3/8]	ø9.52 [3/8]
	Gas Side		mm [inch]	12.7 [1/2]	12.7 [1/2]	12.7 [1/2]	15.88 [5/8]	15.88 [5/8]	15.88 [5/8]	15.88 [5/8]

GLOBAL REMARKS	Cooling	Heating
Rating conditions		
Inside air temperature	27ºC DB / 19ºC WB	20ºC DB
Outside air temperature	35ºC DB / 24ºC WB	7ºC DB / 6ºC WB

DB: Dry Bulb; WB: Wet Bulb

1 These values are at 230 V only. For 220 V and 240 V specifications, please refer to the technical data book.
2 The external static pressure is set to 49 Pa at factory default setting.
3 Add 100 mm for piping port.

COMPACT, LIGHTWEIGHT DESIGN FOR EASY INSTALLATION

Thin and only 250 mm high, with a slim width. This compact unit fits easily in limited spaces. The lightweight and small size also make it easier to transport and install.

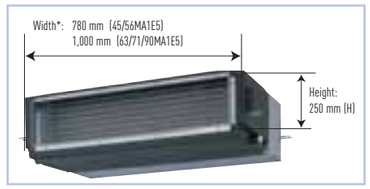

* Add 100 mm for power supply equipment.

VERSATILE AIR INLET AND DRAIN INSTALLATION

The mounting locations for the air inlet and drain outlet can be changed as desired for easy, flexible system layout and installation.

STATIC PRESSURE SELECTION

The static pressure is selectable from 5 or 7 mmAq according to the condition of the duct. For short ducts, the lower pressure of 5 mmAq provides efficient operation.

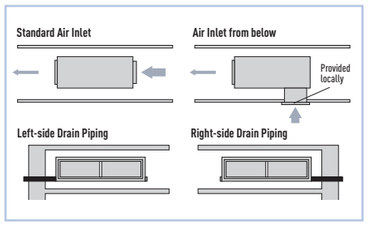

3-WAY REMOVABLE AIR FILTER

The air filter can be slide in-out in three directions even after duct installation for easier maintenance.

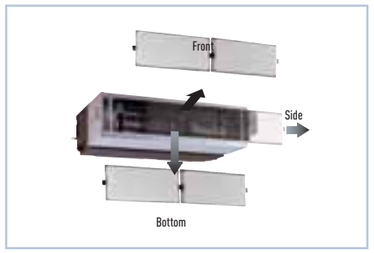

S-45MA1E5 // S-56MA1E5 // S-63MA1E5 // S-71MA1E5 // S-90MA1E5 S-100MA1E5 // S-125MA1E5

Control Flexibility

- 24-Hours ON/OFF Real Setting Timer
- Weekly Timer (Wired Only)
- Group Control by Single Remote Controller
- Outdoor Unit Silent Operation Mode
- Indoor Unit Thermistor Switching (Wired Only)
- Ventilation Unit Control (Wired Only)
- Digital Input/Output Contact - with CZ-TA31P (Optional)

Comfortability

- Filter Sign
- Hot Start Control
- Filter

Field Service & Maintenance

- Indoor Unit Address Setting
- Outdoor Unit Address Setting
- Automatic Address Resetting for Group Control (Wired Only)
- Indoor Unit Test Run Mode
- Emergency Operation (Infrared Only)
- Self Diagnosis Function
- Self Diagnosis Records (Wired Only)

* Wired: Wired Remote Controller / Infrared: Infrared Remote Controller.

SPACE NEEDED FOR INSTALLATION

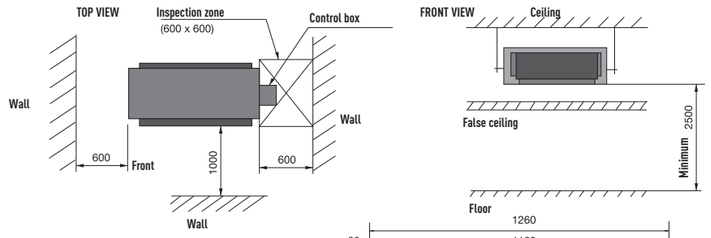

INDOOR UNIT DIMENSIONS

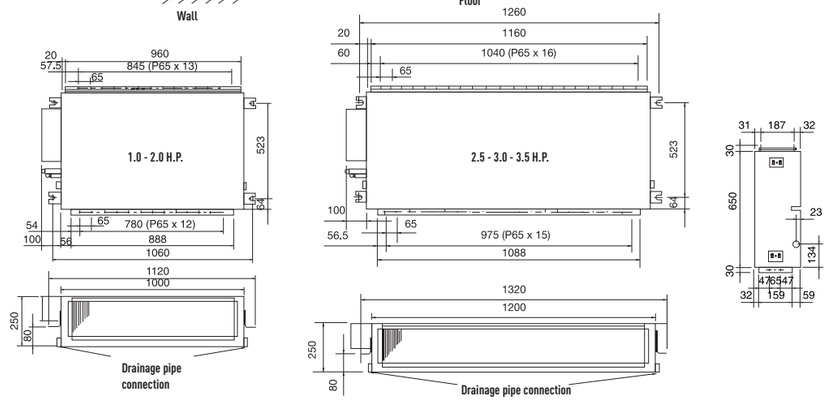

NEW 2011

THE NEW PANASONIC INDUSTRIAL ECOi VRF SYSTEM

(FROM 8 HP TO 60 HP). PROFESSIONAL SOLUTIONS FOR ALL TYPES OF PROJECTS

ECOi SERIES

The new Panasonic VRF ECOi series is specifically designed for energy saving, easy installation and high efficiency performance, with a wide choice of outdoor and indoor unit models and unique features which are designed for the most demanding offices and big buildings.

The range of outdoor unit modules consists of 7 models from 8 HP to 20 HP. The module sizes from 10 HP to 16 HP can be configured for HI-COP.

Standard mode offers the highest capacity while still delivering excellent efficiency, while HI-COP mode delivers exceptional efficiency and low running costs with a slight reduction in capacity.

Up to 64 indoor units can be connected up to a capacity of 200% indexed indoor unit loads, enabling the system to be used effectively on highly diversified building loads: this large connectability feature makes it an easy-to-design solution for schools, hotels, hospitals and other large buildings. Up to 1.000 m in pipe length enables the New VRF ECOi series to be used in very large buildings, with maximum design flexibility.

The ECOi system is also easy to control. It has more than 8 types of control from standard wired remote controls to touch screen panels or web access interface.

environmentally friendly refrigerant R410A

down to -25°C in heating mode OUTDOOR TEMPERATURE

2 TUBES ME1 ECOi SERIES

BENEFITS

Ease of installation
R410A has a higher operating pressure with a lower pressure loss than previous refrigerants. This enables smaller pipe sizes to be used and allows reduced refrigerant charges.

Simple to design
Panasonic recognise that designing, selecting and preparing a professional VRF quotation can be a time consuming and costly process, especially as it is often also a speculative exercise. So we have designed proprietary software which is quick and easy to use and produces a full schematic layout of pipework and controls, as well as a full materials list and performance data.

Easy to control
A wide variety of control options are available to ensure that the ECOi system provides the user with the degree of control that they desire, from simple room controllers through to state of the art BMS controls.

Simple to commission
Simple set-up procedure including automatic addressing of connected indoor units. Configuration settings can be made from an outdoor unit or via a remote controller.

Accurate capacity control
To ensure that the compressor capacity is matched to building load as accurately and efficiently as possible, Panasonic has designed its range of 2 and 3 tubes ECOi systems to operate with DC inverter and high-efficiency fixed speed compressors. The system selects the most efficient compressor to operate by dynamically monitoring the building load and choosing the best compressor combination to run.

Easy to position
The compact design of the ECOi outdoor units means that sizes 8 HP to 12 HP fit into a standard lift and are easy to handle and position when on site. The small footprint and modular appearance of the units ensure a cohesive appearance to an installation.

Off-coil temperature control
Panasonic ducted units offer the unique advantage of being able to offer off-coil temperature coil as standard. This allows designers to select units using an off coil temperature between 7°C and 22°C. This allows room environments to be cooled without subjecting its occupants to cold drafts or uncomfortable conditions. This is achieved without any extra controls or wiring to each unit.

Wide selection and connectability
With 11 indoor model styles available, ECOi systems are the ideal choice for multiple small capacity indoor unit installations, with the ability to connect up to 40 indoor units to systems of 24HP or greater for 3 tubes MF1 ECOi series.

Easy to maintain
Each system allows the use of prognostic and diagnostic controls routines, from refrigerant charge control through to complex fault code diagnostics, all designed to reduce the speed of maintenance calls and unit down time.

Lower running and life cycle costs
Panasonic ECOi VRF systems are amongst the most efficient VRF systems on the market. The system is also designed to make sure that we reduce the running cost of each system by using our unique road map control routine to ensure that the most efficient combination of compressors are running at any one time. Improved defrost sequencing also reduces running cost by defrosting each outdoor coil in turn when conditions allow.

2 TUBES ECOi ME1 SERIES

NEXT GENERATION VRF NEWLY-REDESIGNED!
At start up stage a unit can have Hi COP function selected - this lowers the capacity and increases the COP. You have the choice.

- Top class COP=4.56 (In case of 8 HP heating).
- Wide range of system up to 60 HP.
- Heating operation at outdoor temperatures down to –25˚C.
- Extended pipe runs of up to 180 m.

NEW 2011

SYSTEM (HP)	8	10	12	14	16	18	20	22	24	26	28	30	32	34	36	38	40	42	44	46	48	50	52	54	56	58	60
CONNECTABLE INDOOR UNITS	20	25	30	35	40	45	50	55	60	64																	

Energy savings

Standard COP outdoor units line-up

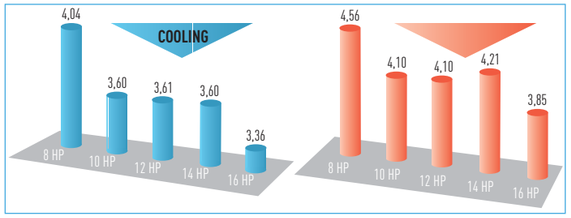

High COP outdoor units line-up

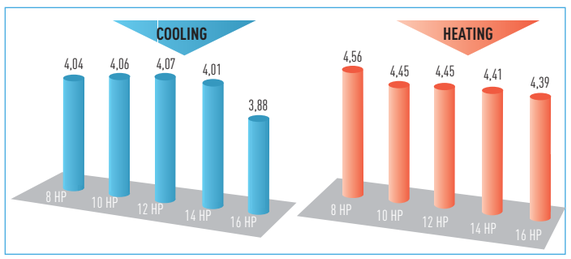

Extended operating range

Heating operation range: The heating operation range has been extended to -25˚C by use of a compressor with a high-pressure vessel.
Cooling operation range: -10˚C DB to +43˚C DB.

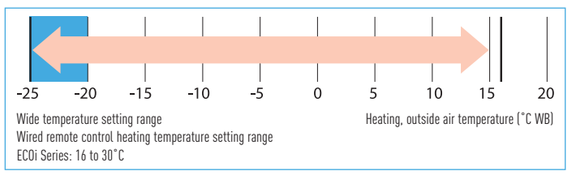

Compact design

New ME1 series has reduced the installation space required by 1 chassis for sizes up to 20 HP.
8-12 HP are able to put inside a lift for easy handling at site.

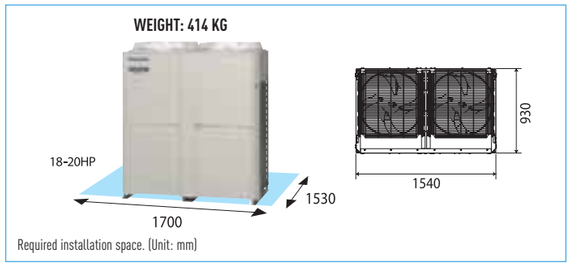

Increased piping lengths and design flexibility

Superior design flexibility for piping works. Adaptable to various building types & sizes. Actual piping length 150 m to 180 m. Max. piping length 300 to 1000 m.

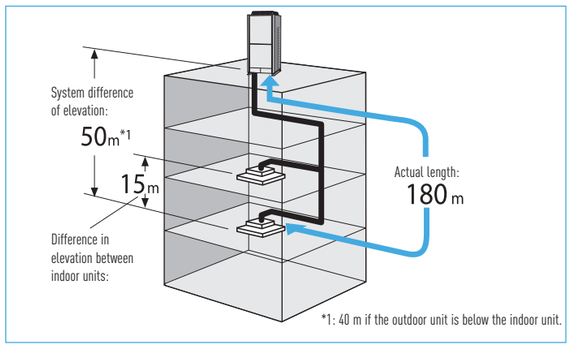

Connectable Indoor/Outdoor unit capacity ratio up to 200%

* Note: In case more than 100% indoor units are operated with high-load, the units may not perform the demanded capacity.

Non-stop operation during maintenance

Even when an indoor unit needs maintenance, the other indoor units can be kept operating by setting. (Not applicable for all situations).

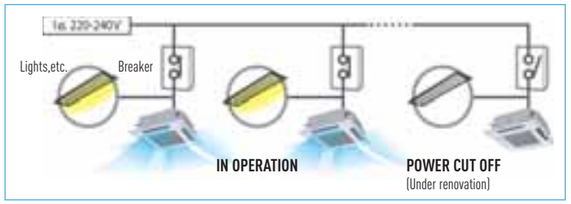

Automatic backup operation in compressors and units for the case of malfunctions.

Extended compressor life by uniform compressor operation times

The total operation time of the compressors is monitored by a microcomputer so that the operation times of all compressors in the same refrigerant system are balanced. Compressors with shorter operation times are utilised first.

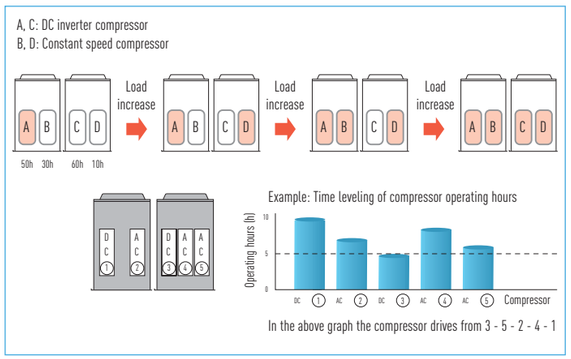

High external static pressure

Special setting at site allows all models to provide up to 80 Pa due to newly designed fan, fan motor and casing.
The flexible design requires an air discharge duct to avoid a reduction in performance due to shortcut of air circulation.
The new feature allows the outdoor unit to be installed inside plant rooms on any floor of the building.

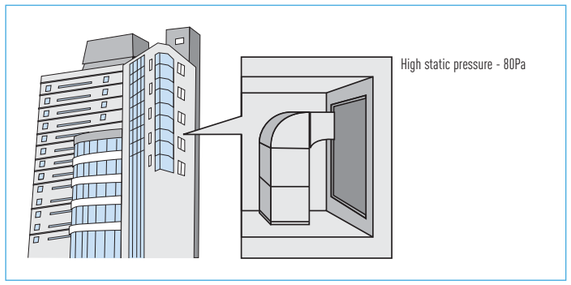

Easy to design solutions for schools, hotels, hospitals and other large buildings

Difference between Max. and Min. length after first branch can be a maximum of 50 m; larger pipe runs can be up to 180 m.

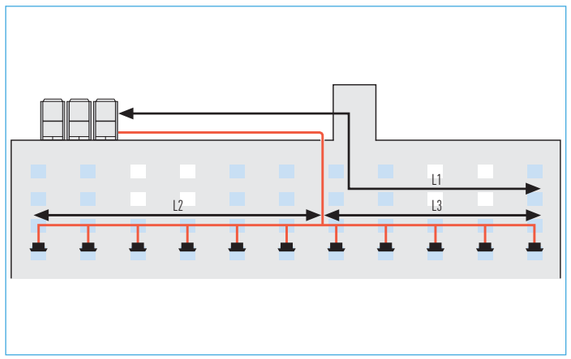

energy saving INVERTER | environmentally friendly refrigerant R410A | down to -25°C in heating mode OUTDOOR TEMPERATURE

8-12 HP 18-20 HP

2 TUBES ME1 ECOi SERIES RANGE

HP				8	10	12	14	16	18	20	22	24	26	28
MODEL NAME				U-8ME1E8	U-10ME1E8	U-12ME1E8	U-14ME1E8	U-16ME1E8	U-18ME1E8	U-20ME1E8	U-14ME1E8 U-8ME1E8	U-14ME1E8 U-10ME1E8	U-14ME1E8 U-12ME1E8	U-16ME1E8 U-12ME1E8
Power supply				380/400/415 3phase/50, 60Hz	380/400/415 3phase/50Hz									
Capacity	Cooling		kW	22.4	28.0	33.5	40.0	45.0	50.0	56.0	61.5	68.0	73.0	78.5
			BTU/h	76,500	95,600	114,300	136,500	153,600	170,600	191,100	209,900	232,100	249,100	267,900
	Heating		kW	25.0	31.5	37.5	45.0	50.0	56.0	63.0	69.0	76.5	81.5	87.5
			BTU/h	85,300	107,500	128,000	153,600	170,600	191,100	215,000	235,500	261,100	278,200	298,600
EER / COP	Cooling		W/W	4.04	3.60	3.61	3.60	3.36	3.50	3.33	3.75	3.60	3.60	3.47
	Heating		W/W	4.56	4.10	4.10	4.21	3.85	3.86	3.82	4.34	4.09	4.12	3.96
Dimensions	H x W x D		mm	1,758 x 770 x 930	1,758 x 770 x 930	1,758 x 770 x 930	1,758 x 1,000 x 930	1,758 x 1,000 x 930	1,758 x 1,540 x 930	1,758 x 1,540 x 930	1,758 x 1,830 x 930	1,758 x 1,830 x 930	1,758 x 1,830 x 930	1,758 x 1,830 x 930
Net weight			kg	230	281	281	307	307	423	423	537	588	588	588
Electrical ratings	Cooling	Running current	A	8.9/8.5/8.2	12.9/12.2/11.8	15.4/14.6/14.1	18.0/17.1/16.5	21.8/20.7/19.9	24.0/22.8/22.0	28.2/26.8/25.8	26.6/25.2/24.3	30.9/29.4/28.3	33.3/31.6/30.5	37.0/35.2/33.9
		Power input	kW	5.54	7.78	9.29	11.1	13.4	14.3	16.8	16.4	18.9	20.3	22.6
	Heating	Running current	A	8.8/8.4/8.1	12.7/12.1/11.6	15.1/14.4/13.9	17.4/16.5/15.9	21.1/20.1/19.3	24.3/23.1/22.3	27.7/26.3/25.4	25.8/24.5/23.6	30.6/29.1/28.0	32.5/30.8/29.7	36.2/34.4/33.1
		Power input	kW	5.48	7,68	9,15	10.7	13.0	14.5	16.5	15.9	18.7	19.8	22.1
Starting current			A	1/1/1	74/77/80	78/81/85	74/77/80	78/81/85	91/93/96	98/101/103	83/86/88	92/94/96	96/98/101	100/102/105
Air flow rate			m³/h	8,820	9,180	11,400	12,720	12,720	14,640	16,980	21,540	21,900	24,120	24,120
Refrigerant amount at shipment			kg	9.9	9.9	9.9	9.9	9.9	9.9	9.9	19.8	19.8	19.8	19.8
External static pressure			Pa	80	80	80	80	80	80	80	80	80	80	80
Piping connections	Gas pipe		mm	19.05	22.22	25.40	25.40	28.58	28.58	28.58	28.58	28.58	31.75	31.75
	Liquid pipe		mm	9.52	9.52	12.70	12.70	12.70	15.88	15.88	15.88	15.88	19.05	19.05
	Balance pipe		mm	6.35	6.35	6.35	6.35	6.35	6.35	6.35	6.35	6.35	6.35	6.35
Ambient temperature operating range				Cooling: -10°C DB ~ +43 °C DB, Heating: -25 °C WB ~ +20 °C WB										
Sound pressure level	Normal mode		dB(A)	56.5	59.0	61.0	62.0	62.0	60.0	63.0	63.0	63.5	64.5	64.5
	Silent mode		dB(A)	53.5	56.0	58.0	59.0	59.0	57.0	60.0	60.0	60.5	61.5	61.5
Sound power level	Normal mode		dB	71.0	73.5	75.5	76.5	76.5	74.5	77.5	77.5	78.0	79.0	79.0

HP				30	32	34	36	38	40	42	44	46	48	50	52	54	56	58	60
MODEL NAME				U-16ME1E8 U-14ME1E8	U-16ME1E8 U-16ME1E8	U-18ME1E8 U-16ME1E8	U-20ME1E8 U-16ME1E8	U-20ME1E8 U-18ME1E8	U-20ME1E8 U-20ME1E8	U-16ME1E8 U-14ME1E8 U-12ME1E8	U-16ME1E8 U-16ME1E8 U-12ME1E8	U-16ME1E8 U-16ME1E8 U-14ME1E8	U-16ME1E8 U-16ME1E8 U-16ME1E8	U-18ME1E8 U-16ME1E8 U-16ME1E8	U-20ME1E8 U-16ME1E8 U-16ME1E8	U-20ME1E8 U-18ME1E8 U-16ME1E8	U-20ME1E8 U-18ME1E8 U-18ME1E8	U-20ME1E8 U-20ME1E8 U-18ME1E8	U-20ME1E8 U-20ME1E8 U-20ME1E8
Power supply				380/400/415 3phase/50Hz															
Capacity	Cooling		kW	85.0	90.0	96.0	101.0	107.0	113.0	118.0	124.0	130.0	135.0	140.0	145.0	151.0	156.0	162.0	168.0
			BTU/h	290,100	307,200	327,600	344,700	365,200	385,700	402,700	423,200	443,700	460,800	477,800	494,900	515,400	532,400	552,900	573,400
	Heating		kW	95.0	100.0	108.0	113.0	119.0	127.0	132.0	138.0	145.0	150.0	155.0	160.0	169.0	175.0	182.0	189.0
			BTU/h	324,200	341,300	368,600	385,700	406,100	433,400	450,500	471,000	494,900	511,900	529,000	546,100	576,800	597,300	621,200	645,100
EER / COP	Cooling		W/W	3.47	3.35	3.43	3.34	3.44	3.36	3.51	3.43	3.43	3.35	3.41	3.35	3.39	3.44	3.38	3.33
	Heating		W/W	4.03	3.86	3.86	3.83	3.84	3.85	4.04	3.92	3.96	3.86	3.86	3.84	3.85	3.85	3.83	3.81
Dimensions	H x W x D		mm	1,758 x 2,060 x 930	1,758 x 2,060 x 930	1,758 x 2,600 x 930	1,758 x 2,600 x 930	1,758 x 3,140 x 930	1,758 x 3,140 x 930	1,758 x 2,890 x 930	1,758 x 2,890 x 930	1,758 x 3,120 x 930	1,758 x 3,120 x 930	1,758 x 3,660 x 930	1,758 x 3,660 x 930	1,758 x 4,200 x 930	1,758 x 4,740 x 930	1,758 x 4,740 x 930	1,758 x 4,740 x 930
Net weight			kg	614	614	730	730	846	846	895	895	921	921	1,037	1,037	1,153	1,269	1,269	1,269
Electrical ratings	Cooling	Running current	A	39.8/37.8/36.5	43.7/41.5/40.0	46.3/44.0/42.4	50.0/47.5/45.8	52.2/49.6/47.8	56.4/53.6/51.7	54.9/52.1/50.3	59.1/56.2/54.2	61.6/58.5/56.4	65.5/62.2/60.0	67.6/64.2/61.9	71.3/67.7/65.3	74.0/70.3/67.7	76.2/72.4/69.8	80.4/76.4/73.6	84.6/80.4/77.5
		Power input	kW	24.5	26.9	28.0	30.2	31.1	33.6	33.6	36.2	37.9	40.3	41.1	43.3	44.5	45.4	47.9	50.4
	Heating	Running current	A	38.3/36.4/35.1	42.1/40.0/38.5	46.3/44.0/42.4	48.8/46.4/44.7	52.0/49.4/47.7	55.4/52.6/50.7	53.4/50.8/48.9	57.5/54.6/52.7	59.5/56.5/54.5	63.2/60.1/57.9	66.1/62.8/60.5	68.6/65.2/62.9	73.0/69.3/66.8	76.2/72.4/69.8	79.7/75.8/73.0	83.3/79.1/76.2
		Power input	kW	23.6	25.9	28.0	29.5	31.0	33.0	32.7	35.2	36.6	38.9	40.2	41.7	43.9	45.4	47.5	49.6
Starting current			A	96/98/101	100/102/105	113/114/116	120/122/123	121/123/124	125/127/128	118/119/121	122/122/125	118/119/121	122/122/125	135/134/136	142/142/143	143/144/144	145/146/146	148/149/149	152/153/153
Air flow rate			m³/h	25,440	25,440	27,360	29,700	31,620	33,960	36,840	36,840	38,160	38,160	40,080	42,420	44,340	46,260	48,600	50,940
Refrigerant amount at shipment			kg	19.8	19.8	19.8	19.8	19.8	19.8	29.7	29.7	29.7	29.7	29.7	29.7	29.7	29.7	29.7	29.7
External static pressure			Pa	80	80	80	80	80	80	80	80	80	80	80	80	80	80	80	80
Piping connections	Gas pipe		mm	31.75	31.75	31.75	38.10	38.10	38.10	38.10	38.10	38.10	38.10	38.10	38.10	38.10	38.10	38.10	38.10
	Liquid pipe		mm	19.05	19.05	19.05	19.05	19.05	19.05	19.05	19.05	19.05	19.05	19.05	19.05	19.05	19.05	19.05	19.05
	Balance pipe		mm	6.35	6.35	6.35	6.35	6.35	6.35	6.35	6.35	6.35	6.35	6.35	6.35	6.35	6.35	6.35	6.35
Ambient temperature operating range				Cooling: -10°C DB ~ +43 °C DB, Heating: -25 °C WB ~ +20 °C WB															
Sound pressure level	Normal mode		dB(A)	65.0	65.0	64.0	65.5	65.0	66.0	66.5	66.5	67.0	67.0	66.0	67.0	66.5	66.0	67.0	68.0
	Silent mode		dB(A)	62.0	62.0	61.0	62.5	62.0	63.0	63.5	63.5	64.0	64.0	63.0	64.0	63.5	63.0	64.0	65.0
Sound power level	Normal mode		dB	79.5	79.5	78.5	80.0	79.5	80.5	81.0	81.0	81.5	81.5	80.5	81.5	81.0	80.5	81.5	82.5

GLOBAL REMARKS

Rated conditions:	Cooling	Heating
Indoor air temperature	27ºC CB / 19ºC WB	20ºC DB
Outdoor air temperature	35ºC CB	7ºC DB / 6ºC WB

These specifications subject to change without notice.

8-12 HP

A 894 (installation hole pitch).
The tubing is routed out frpm the front
B 730 (installation hole pitch).
The tubing is routed out frpm the front
C 730 (installation hole pitch).

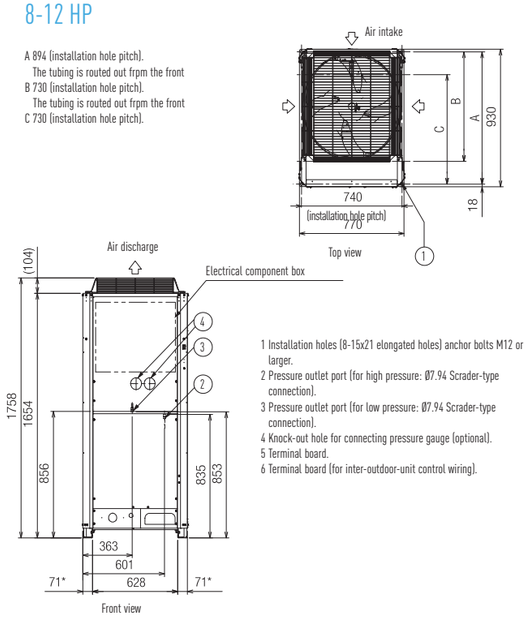

1 Installation holes (8-15x21 elongated holes) anchor bolts M12 or larger.
2 Pressure outlet port (for high pressure: Ø7.94 Scrader-type connection).
3 Pressure outlet port (for low pressure: Ø7.94 Scrader-type connection).
4 Knock-out hole for connecting pressure gauge (optional).
5 Terminal board.
6 Terminal board (for inter-outdoor-unit control wiring).

* Installation fixing bracket, installation side.

14-16 HP

A 894 (installation hole pitch).
The tubing is routed out frpm the front
B 730 (installation hole pitch).
The tubing is routed out frpm the front
C 730 (installation hole pitch).

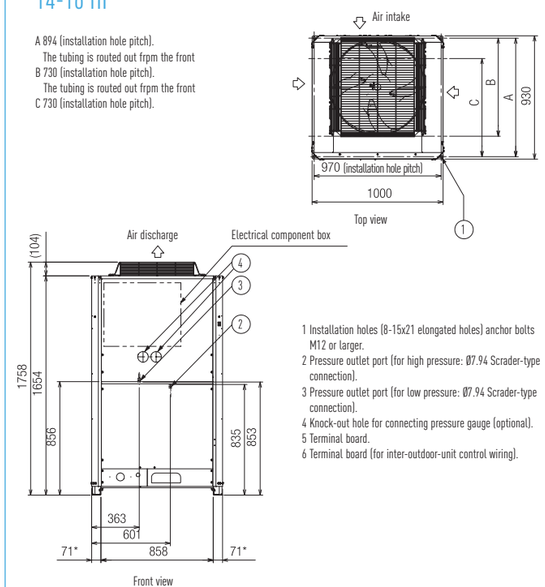

1 Installation holes (8-15x21 elongated holes) anchor bolts M12 or larger.
2 Pressure outlet port (for high pressure: Ø7.94 Scrader-type connection).
3 Pressure outlet port (for low pressure: Ø7.94 Scrader-type connection).
4 Knock-out hole for connecting pressure gauge (optional).
5 Terminal board.
6 Terminal board (for inter-outdoor-unit control wiring).

* Installation fixing bracket, installation side.

18-20 HP

A 894 (installation hole pitch).
The tubing is routed out frpm the front
B 730 (installation hole pitch).
The tubing is routed out frpm the front
C 730 (installation hole pitch).

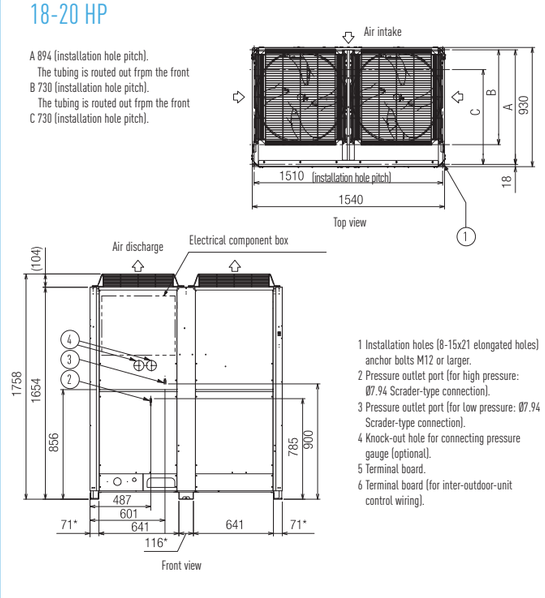

1 Installation holes (8-15x21 elongated holes) anchor bolts M12 or larger.
2 Pressure outlet port (for high pressure: Ø7.94 Scrader-type connection).
3 Pressure outlet port (for low pressure: Ø7.94 Scrader-type connection).
4 Knock-out hole for connecting pressure gauge (optional).
5 Terminal board.
6 Terminal board (for inter-outdoor-unit control wiring).

* Installation fixing bracket, installation side.

energy saving INVERTER | environmentally friendly refrigerant R410A | down to -25°C in heating mode OUTDOOR TEMPERATURE

8-12 HP | 14-16 HP | 18-20 HP

2 TUBES ME1 ECOi SERIES RANGE. WITH ANTI-CORROSION TREATMENT, FOR EXTREME APPLICATIONS

HP				8	10	12	14	16	18	20	22	24	26	28
MODEL NAME				U-8ME1E8E	U-10ME1E8E	U-12ME1E8E	U-14ME1E8E	U-16ME1E8E	U-18ME1E8E	U-20ME1E8E	U-14ME1E8E U-8ME1E8E	U-14ME1E8E U-10ME1E8E	U-14ME1E8E U-12ME1E8E	U-16ME1E8E U-12ME1E8E
Power supply				380/400/415 3phase/50, 60Hz	380/400/415 3phase/50Hz									
Capacity	Cooling		kW	22,4	28,0	33,5	40,0	45,0	50,0	56,0	61,5	68,0	73,0	78,5
			BTU/h	76.500	95.600	114.300	136.500	153.600	170.600	191.100	209.900	232.100	249.100	267.900
	Heating		kW	25,0	31,5	37,5	45,0	50,0	56,0	63,0	69,0	76,5	81,5	87,5
			BTU/h	85.300	107.500	128.000	153.600	170.600	191.100	215.000	235.500	261.100	278.200	298.600
COP	Cooling		W/W	4,04	3,60	3,61	3,60	3,36	3,50	3,33	3,75	3,60	3,60	3,47
	Heating		W/W	4,56	4,10	4,10	4,21	3,85	3,86	3,82	4,34	4,09	4,12	3,96
Dimensions	H x W x D		mm	1.758 x 770 x 930	1.758 x 770 x 930	1.758 x 770 x 930	1.758 x 1.000 x 930	1.758 x 1.000 x 930	1.758 x 1.540 x 930	1.758 x 1.540 x 930	1.758 x 1.830 x 930	1.758 x 1.830 x 930	1.758 x 1.830 x 930	1.758 x 1.830 x 930
Net weight			kg	230	281	281	307	307	423	423	537	588	588	588
Electrical ratings	Cooling	Running amperes	A	8,9/8,5/8,2	12,9/12,2/11,8	15,4/14,6/14,1	18/17,1/16,5	21,8/20,7/19,9	24,0/22,8/22,0	28,2/26,8/25,8	26,6/25,2/24,3	30,9/29,4/28,3	33,3/31,6/30,5	37,0/35,2/33,9
		Power input	kW	5,54	7,78	9,29	11,1	13,4	14,3	16,8	16,4	18,9	20,3	22,6
	Heating	Running amperes	A	8,8/8,4/8,1	12,7/12,1/11,6	15,1/14,4/13,9	17,4/16,5/15,9	21,1/20,0/19,3	24,3/23,1/22,3	27,7/26,3/25,4	25,8/24,5/23,6	30,6/29,1/28	32,5/30,8/29,7	36,2/34,4/33,1
		Power input	kW	5,48	7,68	9,15	10,7	13,0	14,5	16,5	15,9	18,7	19,8	22,1
Starting amperes			A	1/1/1	74/77/80	78/81/85	74/77/80	78/81/85	91/93/96	98/101/103	83/86/88	92/94/96	96/98/101	100/102/105
Air circulation			m³/min	147	153	190	212	212	244	283	358	365	402	402
Refrigerant amount at shipment			kg	80	80	80	80	80	80	80	80	80	80	80
External static pressure			Pa	9,9	9,9	9,9	9,9	9,9	9,9	9,9	9,9	9,9	9,9	9,9
Piping connections	Gas pipe		mm	19,05	22,22	25,40	25,40	28,58	28,58	28,58	28,58	28,58	31,75	31,75
	Liquid pipe		mm	9,52	9,52	12,70	12,70	12,70	15,88	15,88	15,88	15,88	19,05	19,05
	Balance pipe		mm	6,35	6,35	6,35	6,35	6,35	6,35	6,35	6,35	6,35	6,35	6,35
Ambient temperature operating range				Cooling: -10˚CDB~+43˚CDB. Heating: -25˚CWB~+20˚CWB										
Pressure sound	Normal mode		dBA	56,5	59,0	61,0	62,0	62,0	60,0	63,0	63,0	63,5	64,5	64,5
	Silent mode		dBA	53,5	56,0	58,0	59,0	59,0	57,0	60,0	60,0	60,5	61,5	61,5
Power sound	Normal mode		dBA	71,0	73,5	75,5	76,5	76,5	74,5	77,5	77,5	78,0	79,0	79,0

HP				30	32	34	36	38	40	42	44	46	48	50	52	54	56	58	60
MODEL NAME				U-16ME1E8E U-14ME1E8E	U-16ME1E8E U-16ME1E8E	U-18ME1E8E U-16ME1E8E	U-20ME1E8E U-16ME1E8E	U-20ME1E8E U-18ME1E8E	U-20ME1E8E U-20ME1E8E	U-16ME1E8E U-14ME1E8E U-12ME1E8E	U-16ME1E8E U-16ME1E8E U-12ME1E8E	U-16ME1E8E U-16ME1E8E U-14ME1E8E	U-16ME1E8E U-16ME1E8E U-16ME1E8E	U-18ME1E8E U-16ME1E8E U-16ME1E8E	U-20ME1E8E U-16ME1E8E U-16ME1E8E	U-20ME1E8E U-18ME1E8E U-16ME1E8E	U-20ME1E8E U-18ME1E8E U-18ME1E8E	U-20ME1E8E U-20ME1E8E U-18ME1E8E	U-20ME1E8E U-20ME1E8E U-20ME1E8E
Power supply				380/400/415 3phase/50Hz															
Capacity	Cooling		kW	85,0	90,0	96,0	101,0	107,0	113,0	118,0	124,0	130,0	135,0	140,0	145,0	151,0	156,0	162,0	168,0
			BTU/h	290.100	307.200	327.600	344.700	365.200	385.700	402.700	423.200	443.700	460.800	477.800	494.900	515.400	532.400	552.900	573.400
	Heating		kW	95,0	100,0	108,0	113,0	119,0	127,0	132,0	138,0	145,0	150,0	155,0	160,0	175,0	169,0	182,0	189,0
			BTU/h	324.200	341.300	368.600	385.700	406.100	433.400	450.500	471.000	494.900	511.900	529.000	546.100	576.800	597.300	645.100	621.200
COP	Cooling		W/W	3,47	3,35	3,43	3,34	3,44	3,36	3,51	3,43	3,43	3,35	3,41	3,35	3,39	3,44	3,38	3,33
	Heating		W/W	4,03	4,56	3,86	3,83	3,84	3,85	4,04	3,92	3,96	3,86	3,86	3,84	3,85	3,85	3,83	3,81
Dimensions	H x W x D		mm	1.758 x 2.060 x 930	1.758 x 2.060 x 930	1.758 x 2.600 x 930	1.758 x 2.600 x 930	1.758 x 3.140 x 930	1.758 x 3.140 x 930	1.758 x 2.890 x 930	1.758 x 2.890 x 930	1.758 x 3.120 x 930	1.758 x 3.120 x 930	1.758 x 3.660 x 930	1.758 x 3.660 x 930	1.758 x 4.200 x 930	1.758 x 4.740 x 930	1.758 x 4.740 x 930	1.758 x 4.740 x 930
Net weight			kg	614	614	730	730	846	846	895	895	921	921	1.037	1.037	1.153	1.269	1.269	1.269
Electrical ratings	Cooling	Running amperes	A	39,8/37,8/36,5	43,7/41,5/40	46,3/44,0/42,4	50,0/47,5/45,8	52,2/49,6/47,8	56,4/53,6/51,7	54,9/52,1/50,3	59,1/56,2/54,2	61,6/58,5/56,4	65,3/62,0/60	67,6/64,2/61,9	71,3/67,7/65,3	74,0/70,3/67,7	76,2/72,4/69,8	80,4/76,4/73,6	84,6/80,4/77,5
		Power input	kW	24,5	26,9	28,0	30,2	31,1	33,6	33,6	36,2	37,9	40,3	41,1	43,3	45,4	44,5	47,9	50,4
	Heating	Running amperes	A	38,3/36,4/35,1	42,1/40/38,5	46,5/44,0/42,4	48,8/46,4/44,7	52,0/49,4/47,7	55,4/52,6/50,7	53,4/50,8/48,9	57,5/54,6/52,7	59,5/56,5/54,5	63,2/60,1/57,9	66,1/62,8/60,5	68,6/65,2/62,9	73,0/69,3/66,8	76,2/72,4/69,8	79,7/75,8/73	83,3/79,1/76,2
		Power input	kW	23,6	25,9	28,0	29,5	31,0	33,0	32,7	35,2	36,6	38,9	40,2	41,7	43,9	45,4	47,5	49,6
Starting amperes			A	96/98/101	100/102/105	113/114/116	120/122/123	121/123/124	125/127/128	118/119/121	122/122/125	118/119/121	122/122/125	135/134/136	142/142/143	143/144/144	145/146/146	148/149/149	152/153/153
Air circulation			m³/min	424	424	456	495	528	567	614	614	636	636	668	707	739	771	810	849
Refrigerant amount at shipment			kg	80	80	80	80	80	80	80	80	80	80	80	80	80	80	80	80
External static pressure			Pa	9,9	9,9	9,9	9,9	9,9	9,9	9,9	9,9	9,9	9,9	9,9	9,9	9,9	9,9	9,9	9,9
Piping connections	Gas pipe		mm	31,75	31,75	31,75	38,10	38,10	38,10	38,10	38,10	38,10	38,10	38,10	38,10	38,10	38,10	38,10	38,10
	Liquid pipe		mm	19,05	19,05	19,05	19,05	19,05	19,05	19,05	19,05	19,05	19,05	19,05	19,05	19,05	19,05	19,05	19,05
	Balance pipe		mm	6,35	6,35	6,35	6,35	6,35	6,35	6,35	6,35	6,35	6,35	6,35	6,35	6,35	6,35	6,35	6,35
Ambient temperature operating range				Cooling: -10˚CDB~+43˚CDB. Heating: -25˚CWB~+20˚CWB															
Pressure sound	Normal mode		dBA	65,0	65,0	64,0	65,5	65,0	66,0	66,5	66,5	67,0	67,0	66,5	66,0	67,0	66,0	67,0	68,0
	Silent mode		dBA	62,0	62,0	61,0	62,5	62,0	63,0	63,5	63,5	64,0	64,0	63,0	64,0	63,5	63,0	64,0	65,0
Power sound	Normal mode		dBA	79,5	79,5	78,5	80,0	79,5	80,5	81,0	81,0	81,5	81,5	80,5	81,5	81,0	80,5	81,5	82,5

GLOBAL REMARKS

Rated conditions:	Cooling	Heating
Indoor air temperature	27ºC CB / 19ºC WB	20ºC DB
Outdoor air temperature	35ºC CB	7ºC DB / 6ºC WB

These specifications subject to change without notice.

8-12 HP

A 894 (installation hole pitch).
The tubing is routed out frpm the front
B 730 (installation hole pitch).
The tubing is routed out frpm the front
C 730 (installation hole pitch).

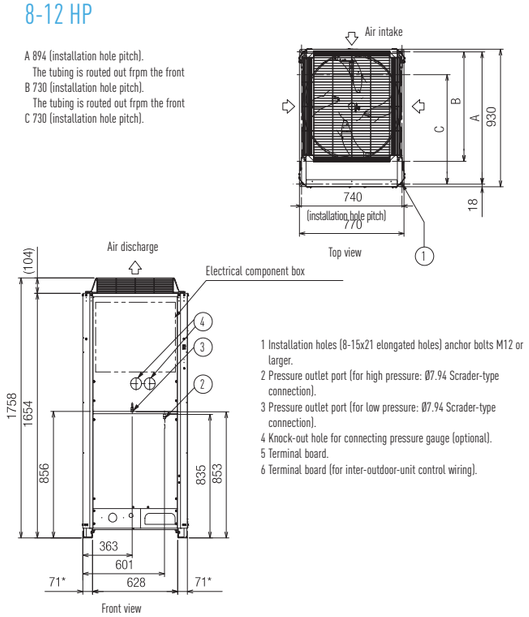

1 Installation holes (8-15x21 elongated holes) anchor bolts M12 or larger.
2 Pressure outlet port (for high pressure: Ø7.94 Scrader-type connection).
3 Pressure outlet port (for low pressure: Ø7.94 Scrader-type connection).
4 Knock-out hole for connecting pressure gauge (optional).
5 Terminal board.
6 Terminal board (for inter-outdoor-unit control wiring).

* Installation fixing bracket, installation side.

14-16 HP

A 894 (installation hole pitch).
The tubing is routed out frpm the front
B 730 (installation hole pitch).
The tubing is routed out frpm the front
C 730 (installation hole pitch).

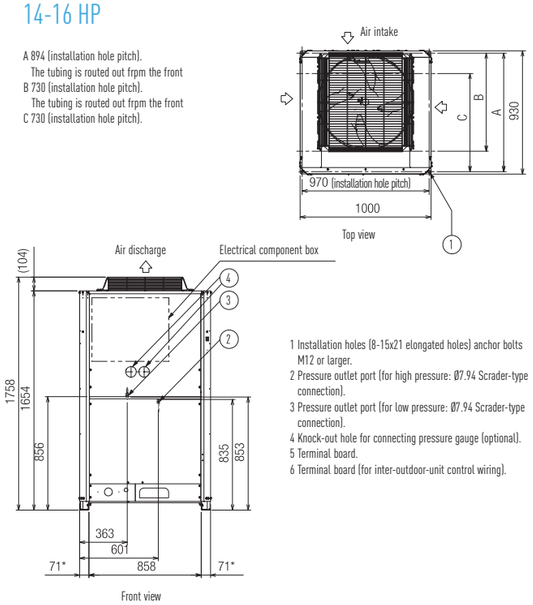

1 Installation holes (8-15x21 elongated holes) anchor bolts M12 or larger.
2 Pressure outlet port (for high pressure: Ø7.94 Scrader-type connection).
3 Pressure outlet port (for low pressure: Ø7.94 Scrader-type connection).
4 Knock-out hole for connecting pressure gauge (optional).
5 Terminal board.
6 Terminal board (for inter-outdoor-unit control wiring).

* Installation fixing bracket, installation side.

18-20 HP

A 894 (installation hole pitch).
The tubing is routed out frpm the front
B 730 (installation hole pitch).
The tubing is routed out frpm the front
C 730 (installation hole pitch).

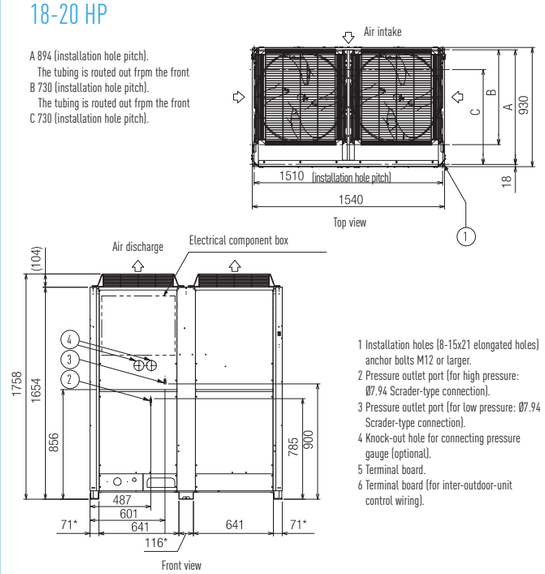

1 Installation holes (8-15x21 elongated holes) anchor bolts M12 or larger.
2 Pressure outlet port (for high pressure: Ø7.94 Scrader-type connection).
3 Pressure outlet port (for low pressure: Ø7.94 Scrader-type connection).
4 Knock-out hole for connecting pressure gauge (optional).
5 Terminal board.
6 Terminal board (for inter-outdoor-unit control wiring).

* Installation fixing bracket, installation side.

energy saving INVERTER | environmentally friendly refrigerant R410A | down to -25°C in heating mode OUTDOOR TEMPERATURE

8-12 HP 14-16 HP 18-20 HP

2 TUBES ME1 ECOi SERIES RANGE. High COP

HP				8	10	12	14	16	18	20	22	24	26	28	30	32	34	36	38	40	42	44	46	48
MODEL NAME				U-8ME1E8*	U-14ME1E8	U-16ME1E8	U-16ME1E8	U-20ME1E8	U-14ME1E8 U-8ME1E8	U-16ME1E8 U-8ME1E8	U-16ME1E8 U-8ME1E8	U-16ME1E8 U-16ME1E8	U-16ME1E8 U-16ME1E8	U-20ME1E8 U-16ME1E8	U-20ME1E8 U-16ME1E8	U-20ME1E8 U-20ME1E8	U-16ME1E8 U-16ME1E8 U-8ME1E8	U-16ME1E8 U-16ME1E8 U-16ME1E8	U-16ME1E8 U-16ME1E8 U-16ME1E8	U-20ME1E8 U-16ME1E8 U-16ME1E8	U-20ME1E8 U-16ME1E8 U-16ME1E8	U-20ME1E8 U-16ME1E8 U-16ME1E8	U-20ME1E8 U-20ME1E8 U-16ME1E8	U-20ME1E8 U-20ME1E8 U-20ME1E8
Power supply				380/400/415 3phase/50,60Hz	380/400/415 3phase/50Hz												380/400/415 3phase/50Hz							
Capacity	Cooling		kW	22,4	28,0	33,5	40,0	45,0	50,0	56,0	61,5	68,0	73,0	78,5	85,0	90,0	96,0	101,0	107,0	113,0	118,0	124,0	130,0	135,0
			BTU/h	76.500	95.600	114.300	136.500	153.600	170.600	191.100	209.900	232.100	249.100	267.900	290.100	307.200	327.600	344.700	365.200	385.700	402.700	423.200	443.700	460.800
	Heating		kW	25,0	31,5	37,5	45,0	50,0	56,0	63,0	69,0	76,5	81,5	87,5	95,0	100,0	108,0	113,0	119,0	127,0	132,0	138,0	145,0	150,0
			BTU/h	85.300	107.500	128.000	153.600	170.600	191.100	215.000	235.500	261.100	278.200	298.600	324.200	341.300	368.600	385.700	406.100	433.400	450.500	471.000	494.900	511.900
COP	Cooling		W/W	4,04	4,06	4,07	4,01	3,88	4,07	4,06	3,97	4,07	4,01	3,96	3,94	3,88	4,09	4,07	4,08	4,04	3,96	3,97	3,92	3,88
	Heating		W/W	4,56	4,45	4,45	4,41	4,39	4,52	4,50	4,39	4,45	4,38	4,42	4,40	4,41	4,54	4,45	4,44	4,47	4,40	4,42	4,41	4,40
Dimensions	H x W x D		mm	1.758 x 770 x 930	1.758 x 1.000 x 930	1.758 x 1.000 x 930	1.758 x 1.540 x 930	1.758 x 1.540 x 930	1.758 x 1.830 x 930	1.758 x 1.830 x 930	1.758 x 2.370 x 930	1.758 x 2.060 x 930	1.780 x 2.600 x 930	1.780 x 2.600 x 930	1.758 x 3.140 x 930	1.758 x 3.140 x 930	1.758 x 3.430 x 930	1.758 x 3.120 x 930	1.758 x 3.660 x 930	1.758 x 3.660 x 930	1.758 x 4.200 x 930	1.758 x 4.740 x 930	1.758 x 4.740 x 930	1.758 x 4.740 x 930
Net weight			kg	230	307	307	423	423	537	537	653	614	730	730	846	846	960	921	1,037	1.037	1.153	1.269	1.269	1.269
Electrical ratings	Cooling	Running amperes	A	8,9/8,5/8,2	11,2/10,7/10,3	13,4/12,7/12,2	16,3/15,4/14,9	18,9/17,9/17,3	19,9/18,9/18,2	22,4/21,2/20,5	25,2/23,9/23	27,1/25,8/24,8	29,6/28,1/27,1	32,2/30,6/29,5	35,2/33,4/32,2	37,8/35,9/34,6	38,1/36,2/34,9	40,3/38,3/36,9	42,6/40,5/39	45,5/43,3/41,7	48,5/46,1/44,4	50,8/48,3/46,5	54,1/51,4/49,5	56,7/53,8/51,9
		Power input	kW	5,54	6,90	8,23	9,98	11,6	12,3	13,8	15,5	16,7	18,2	19,8	21,6	23,2	23,5	24,8	26,2	28,0	29,8	31,2	33,2	34,8
	Heating	Running amperes	A	8,8/8,4/8,1	11,5/10,9/10,5	13,7/13/12,5	16,6/15,8/15,2	18,6/17,6/17,0	20,1/19,1/18,4	22,7/21,5/20,8	25,5/24,2/23,3	27,9/26,6/26,5	30,3/28,7/27,7	32,2/30,6/29,5	35,2/33,4/32,2	37/35,1/33,8	38,6/36,7/35,4	41,3/39,2/37,8	43,6/41,4/39,9	46,2/43,9/42,3	48,8/46,4/44,7	50,8/48,3/46,5	53,6/50,9/49,1	55,5/52,8/50,8
		Power input	kW	5,48	7,08	8,43	10,2	11,4	12,4	14,0	15,7	17,2	18,6	19,8	21,6	22,7	23,8	25,4	26,8	28,4	30,0	31,2	32,9	34,1
Starting amperes			A	1/1/1	74/77/80	78/81/85	89/92/95	95/98/101	83/86/88	87/90/93	98/101/103	92/94/98	103/105/108	109/111/114	112/114/116	114/116/118	112/113/116	105/107/110	116/118/120	122/124/126	125/127/129	128/130/131	130/131/133	133/134/136
Air circulation			m³/min	147	212	212	244	283	359	359	391	424	456	495	527	566	603	636	668	707	739	771	810	849
External static pressure			kg	80	80	80	80	80	80	80	80	80	80	80	80	80	80	80	80	80	80	80	80	80
Refrigerant amount at shipment			Pa	9,9	9,9	9,9	9,9	9,9	19,8	19,8	19,8	19,8	19,8	19,8	19,8	19,8	29,7	29,7	29,7	29,7	29,7	29,7	29,7	29,7
Piping connections	Gas pipe		mm	19,05	22,22	25,40	25,40	28,58	28,58	28,58	28,58	28,58	31,75	31,75	31,75	31,75	31,75	38,10	38,10	38,10	38,10	38,10	38,10	38,10
	Liquid pipe		mm	9,52	9,52	12,70	12,70	12,70	15,88	15,88	15,88	15,88	19,05	19,05	19,05	19,05	19,05	19,05	19,05	19,05	19,05	19,05	19,05	19,05
	Balance pipe		mm	6,35	6,35	6,35	6,35	6,35	6,35	6,35	6,35	6,35	6,35	6,35	6,35	6,35	6,35	6,35	6,35	6,35	6,35	6,35	6,35	6,35
Ambient temperature operating range				Cooling: -10˚CDB~+43˚CDB. Heating: -25˚CWB~+20˚CWB											Cooling: -10˚CDB~+43˚CDB. Heating: -25˚CWB~+20˚CWB									
Pressure sound	Normal mode		dBA	56,5	62,0	62,0	60,0	63,0	63,0	63,0	61,5	65,0	64,0	65,5	65,0	66,0	64,5	66,5	66,0	67,0	66,5	66,0	67,0	67,5
	Silent mode		dBA	53,5	59,0	59,0	57,0	60,0	60,0	60,0	58,5	62,0	61,0	62,5	62,0	63,0	61,5	63,5	63,0	64,0	63,5	63,0	64,0	64,5
Power sound	Normal mode		dBA	71,0	76,5	76,5	74,5	77,5	77,5	77,5	76,0	79,5	78,5	80,0	79,5	80,5	79,0	81,0	80,5	81,5	81,0	80,5	81,5	82,0

* Same as standard COP

GLOBAL REMARKS

Rated conditions:	Cooling	Heating
Indoor air temperature	27ºC CB / 19ºC WB	20ºC DB
Outdoor air temperature	35ºC CB	7ºC DB / 6ºC WB

These specifications subject to change without notice.

Energy savings

Improved COP & EER by new design for heat exchangers, FAN, Fan motor and compressor.

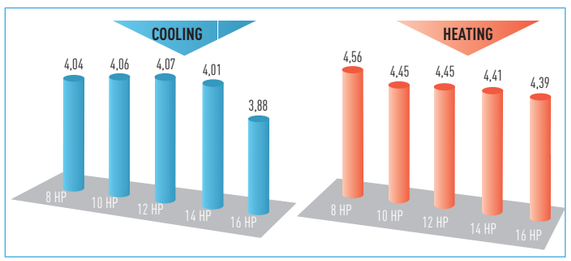

To set at "High-COP model" on PCB of outdoor unit, please check the technical data book of the outdoor unit

8 HP

1 Installation anchoring hole (4-15x21 elongated hole) Anchor bolt: M12 more
2 Refrigerant piping port (front / knockout hole)
3 Electric wiring port (front /Ø60,Ø28 knockout hole conduit connection)
4 Mounting hole for manifold gauge (high-pressure outlet port / Ø7,94 dia connector)
5 Mounting hole for manifold gauge (low-pressure outlet port / Ø7,94 dia connector)
6 Knockout hole to fix manifold gauge (field supply)

Distribution joint kit
For indoor units
- CZ-P224BK2BM (Capacity after distribution: 22,4 kW or lower)
- CZ-P680BK2BM (Capacity after distribution: Over 22,4 kW to 68,0 kW)
- CZ-P1350BK2BM (Capacity agter distribution: Over 68,0 kW to 135,0 kW)

For outdoor units
- CZ-P680PH2BM (Capacity after distribution: 68,0 kW or lower)
- CZ-P1350PH2BM (Capacity after distribution: Over 68,0 kW to 135,0 kW

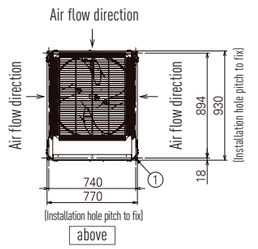

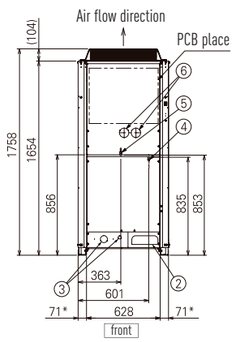

*Installation surface

10-12 HP

1 Installation anchoring hole (4-15x21 elongated hole) Anchor bolt: M12 more
2 Refrigerant piping port (front / knockout hole)
3 Electric wiring port (front /Ø60,Ø28 knockout hole conduit connection)
4 Mounting hole for manifold gauge (high-pressure outlet port / Ø7,94 dia connector)
5 Mounting hole for manifold gauge (low-pressure outlet port / Ø7,94 dia connector)
6 Knockout hole to fix manifold gauge (field supply)

Distribution joint kit
For indoor units
- CZ-P224BK2BM (Capacity after distribution: 22,4 kW or lower)
- CZ-P680BK2BM (Capacity after distribution: Over 22,4 kW to 68,0 kW)
- CZ-P1350BK2BM (Capacity agter distribution: Over 68,0 kW to 135,0 kW)

For outdoor units
- CZ-P680PH2BM (Capacity after distribution: 68,0 kW or lower)
- CZ-P1350PH2BM (Capacity after distribution: Over 68,0 kW to 135,0 kW

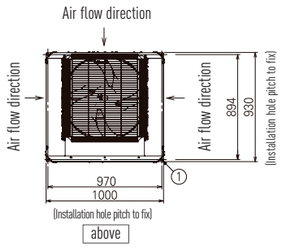

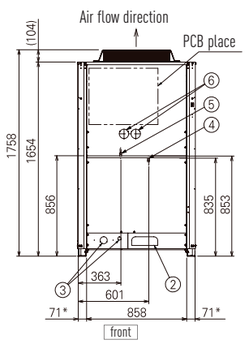

*Installation surface

14-16 HP

1 Installation anchoring hole (4-15x21 elongated hole) Anchor bolt: M12 more
2 Refrigerant piping port (front / knockout hole)
3 Electric wiring port (front /Ø60,Ø28 knockout hole conduit connection)
4 Mounting hole for manifold gauge (high-pressure outlet port / Ø7,94 dia connector)
5 Mounting hole for manifold gauge (low-pressure outlet port / Ø7,94 dia connector)
6 Knockout hole to fix manifold gauge (field supply)

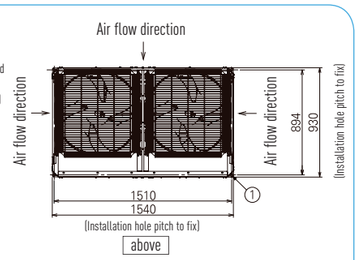

Distribution joint kit
For indoor units
- CZ-P224BK2BM (Capacity after distribution: 22,4 kW or lower)
- CZ-P680BK2BM (Capacity after distribution: Over 22,4 kW to 68,0 kW)
- CZ-P1350BK2BM (Capacity agter distribution: Over 68,0 kW to 135,0 kW)

For outdoor units
- CZ-P680PH2BM (Capacity after distribution: 68,0 kW or lower)
- CZ-P1350PH2BM (Capacity after distribution: Over 68,0 kW to 135,0 kW

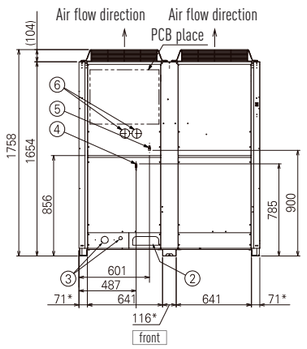

*Installation surface

3 TUBES ECOi MF1 SERIES

WITH SIMULTANEOUS HEATING AND COOLING OPERATION HEAT RECOVERY TYPE

ECOi 3 Tubes is one of the most advanced VRF systems available. Not only offering high-efficiency and performance for simultaneous heating and cooling, Its sophisticated design makes installation and maintenance much easier.

- Conforms to COP 3.94 as the top class in the industry (Average cooling and heating value for 8 HP outdoor unit).
- Simultaneous cooling or heating operation for up to 40 indoor units.
- Small installation space, top class in the industry.
- Rotation operation function and back-up operation function provided.

NEW 2011

SYSTEM (HP)	8	10	12	14	16	18	20	22	24	26	28	30	32	34	36	38	40	42	44	46	48
CONNECTABLE INDOOR UNITS	13	16	19	23	26	29	33	36	40												

Excellent energy saving

High level operation efficiency has been improved by using the highly efficient new refrigerant R410A and a DC inverter compressor as well as a new DC fan motor. With efficient air speed distribution improved by changing the design of the heat exchanger from 3-direction suction to 4-direction suction, and by using a low-loss wire guard for the fan guard.

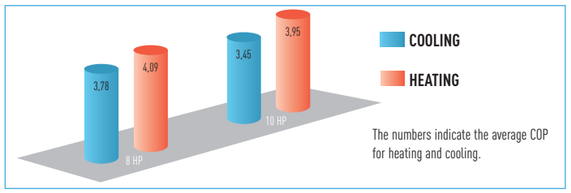

Extended operating range

Cooling operation range: The cooling operation range has been extended to -10˚C by changing the outdoor fan to an inverter type.

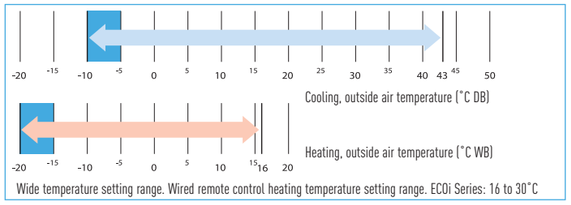

Long piping design

Actual piping length 150 m. Total piping length 300 m.

Non-stop operation during maintenance

Even when an indoor unit needs maintenance, the other indoor units can be kept operating by setting. (Not applicable for all situations).

Fully-automatic simultaneous Cooling/ Heating operation and heat recovery

3 tubes ECOi VRF enables simultaneous heating and cooling operation by each solenoid valve kit.

CZ-P56HR2 Up to 56 indoor unit
CZ-P160HR2 Up to 160 indoor unit

Solenoid valve controller CZ-CAPE2 / CZ-CAPEK2

The solenoid valve is needed to connect an indoor unit to an HR box. It can also provide outputs of defrost, heating, cooling and thermostat ON signals.

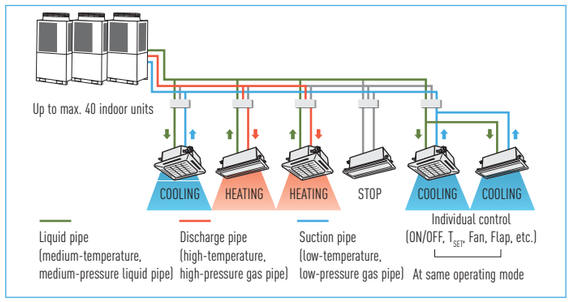

Smallest installation space in the industry! Further reduction of the operating-sound

The five DC inverter types from 8 HP to 16 HP have been unified to the same external dimensions by using a two-room construction with the compressor and other structural parts at the lower room of the outdoor unit and the heat exchanger at the upper room of the outdoor unit. In this way, the smallest installation space in the industry and low operating sound have been realized.

INSTALLATION SPACE: 0,79 m²

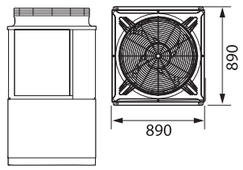

(In case of 16 HP)

An emergency backup function is provided

RANGES THAT APPLY TO REFRIGERANT PIPING LENGTHS AND TO DIFFERENCES IN INSTALLATION HEIGHTS				
Items	Marks	Contents	Length (m)	
Allowable piping length	L1	Max. piping length	Actual piping length	≤150
			Equivalent piping length	≤175
	Δ L (L2–L4)	Difference between the max. length and the min. length from the No. 1 distribution		≤40
	LM	Max. length of main piping (at max. diameter)		≤80
	1, 2~40	Max. length of each distribution		≤30
	L1+1+2+~40+A+B+LF+LG+LH	Total max. piping length including length of each distribution (only liquid tubing)		≤300
	L5	Distance between outdoor units		≤10
Allowable elevation difference	H1	When outdoor unit is installed higher than indoor unit		≤50
		When outdoor unit is installed lower than indoor unit		≤40
	H2	Max. difference between indoor units		≤15
	H3	Max. difference between outdoor units		≤4

Note 1: The outdoor connection main piping (L0 part) depends on the total capacity of the outdoor units connected to the end.
Note 2: When the main piping length (L1) (equivalent length) exceeds 90 m, increase the size of both the gas and liquid main piping (LM) by 1 step.
Specifications subject to change without notice.

Piping design

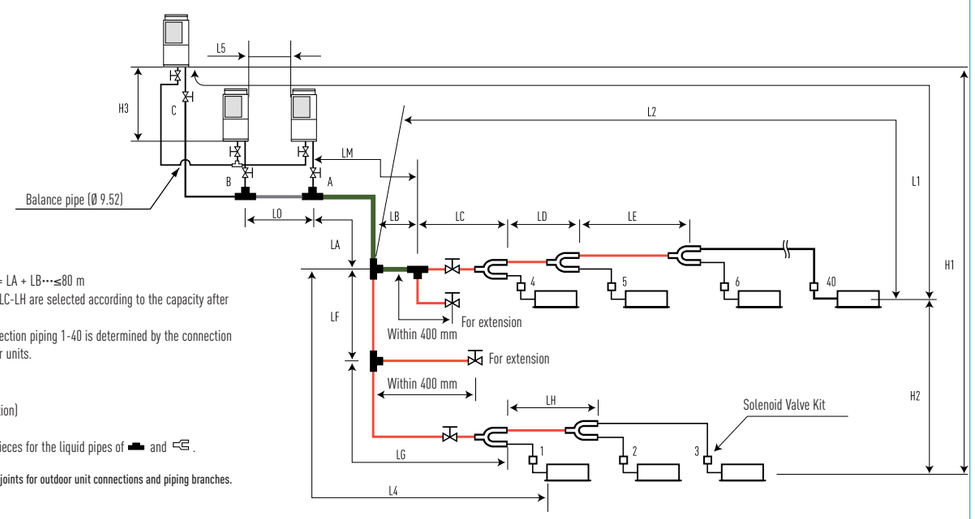

PIPING DESIGN

1. Main piping length LM = LA + LB···≤80 m
2. Main distribution pipes LC-LH are selected according to the capacity after the distribution joint.
3. Size of indoor unit connection piping 1-40 is determined by the connection piping size on the indoor units.

SYMBOL EXPLANATION

Distribution joint (APR, option)
Ball valve (BV, option)
Note: Do not use commercial T-pieces for the liquid pipes of and .

* Be sure to use R410A distribution joints for outdoor unit connections and piping branches.

energy saving INVERTER | environmentally friendly refrigerant R410A | down to -25°C in heating mode OUTDOOR TEMPERATURE

8-16 HP

3 TUBES ECOi MF1 SERIES

HP				8	10	12	14	16	18	20	22	24
MODEL NAME				U-8MF1E8	U-10MF1E8	U-12MF1E8	U-14MF1E8	U-16MF1E8	U-8MF1E8 U-10MF1E8	U-10MF1E8 U-10MF1E8	U-10MF1E8 U-12MF1E8	U-10MF1E8 U-14MF1E8
Power supply				380/400/415V-3phase/50Hz								
Capacity	Cooling		kW	22,4	28,0	33,5	40,0	45,0	50,4	56,0	61,5	68,0
			BTU/h	76.400	95.500	114.300	136.500	153.600	172.000	191.100	219.900	232.000
	Heating		kW	25,0	31,5	37,5	45,0	50,0	56,5	63,0	69,0	76,5
			BTU/h	85.300	107.500	128.000	153.600	170.600	192.800	215.000	235.500	261.100
COP	Cooling		W/W	3,78	3,45	3,41	3,45	3,38	3,57	3,46	3,44	3,45
	Heating		W/W	4,09	3,95	3,81	3,91	3,79	4,01	3,96	3,88	3,92
Dimensions	H x W x D		mm	1.887x890x890(+60)	1.887x890x890(+60)	1.887x890x890(+60)	1.887x890x890(+60)	1.887x890x890(+60)	1.887x1.880x890(+60)	1.887x1.880x890(+60)	1.887x1.880x890(+60)	1.887x1.880x890(+60)
Net weight			kg	290	290	290	350	350	580	580	580	630
Electrical ratings	Cooling	Running amperes	A	10,0/9,5/9,2	13,7/13,0/12,6	16,6/15,7/15,2	20,0/19,0/18,3	23,0/21,8/21,0	23,8/22,6/21,8	27,3/26,0/25,0	30,2/28,7/27,7	33,6/31,9/30,8
		Power input	kW	5,93	8,12	9,82	11,6	13,3	14,1	16,2	17,9	19,7
	Heating	Running amperes	A	10,3/9,8/9,4	13,5/12,8/12,3	16,6/15,8/15,2	19,9/18,9/18,2	22,8/21,6/20,9	23,8/22,6/21,8	26,8/25,5/24,6	30,0/28,5/27,5	33,3/31,6/30,5
		Power input	kW	6,11	7,97	9,84	11,5	13,2	14,1	15,9	17,8	19,5
Air circulation			m^3/min	150	160	150	200	220	150+160	160+160	160+180	160+200
Refrigerant amount at shipment			kg	11,8	11,8	11,8	11,8	11,8	23,6	23,6	23,6	23,6
Piping connections	Suction pipe		mm	Ø19,05	Ø22,22	Ø25,40	Ø25,40	Ø28,58	Ø28,58	Ø28,58	Ø28,58	Ø28,58
	Discharge pipe		mm	Ø15,88	Ø19,05	Ø19,05	Ø22,22	Ø22,22	Ø22,22	Ø22,22	Ø25,40	Ø25,40
	Liquid pipe		mm	Ø9,52	Ø9,52	Ø12,70	Ø12,70	Ø12,70	Ø15,88	Ø15,88	Ø15,88	Ø15,88
	Balance pipe		mm	Ø9,52	Ø9,52	Ø9,52	Ø9,52	Ø9,52	Ø9,52	Ø9,52	Ø9,52	Ø9,52
Ambient temperature operating range				Cooling/Dry: -10˚C~+43˚C (DB). Heating: -20˚C~+15˚C (WB) Simultaneous operation: -10˚C~+43˚C (DB)								
Operating sound	Normal mode		dBA	54,5	55	56	60	61	58	58	58,5	58
	Silent mode		dBA	51,5	52	53	57	58	55	55	55,5	55

HP				26	28	30	32	34	36	38	40	42	44	46	48
MODEL NAME				U-10MF1E8 U-16MF1E8	U-12MF1E8 U-16MF1E8	U-14MF1E8 U-16MF1E8	U-16MF1E8 U-16MF1E8	U-10MF1E8 U-10MF1E8 U-14MF1E8	U-10MF1E8 U-10MF1E8 U-16MF1E8	U-10MF1E8 U-12MF1E8 U-16MF1E8	U-10MF1E8 U-14MF1E8 U-16MF1E8	U-10MF1E8 U-16MF1E8 U-16MF1E8	U-12MF1E8 U-16MF1E8 U-16MF1E8	U-14MF1E8 U-16MF1E8 U-16MF1E8	U-16MF1E8 U-16MF1E8 U-16MF1E8
Power supply				380/400/415V-3phase/50Hz											
Capacity	Cooling		kW	73,0	78,5	85,0	90,0	96,0	101,0	107,0	113,0	118,0	124,0	130,0	135,0
			BTU/h	249.100	267.900	290.100	307.100	327.600	344.700	363.400	385.600	402.700	421.400	443.600	460.700
	Heating		kW	81,5	87,5	95,0	100,0	108,0	113,0	119,0	127,0	132,0	138,0	145,0	150,0
			BTU/h	278.100	300.300	324.200	343.000	368.500	385.600	407.800	431.700	450.400	470.900	494.800	511.900
COP	Cooling		W/W	3,41	3,40	3,41	3,38	3,45	3,41	3,42	3,42	3,40	3,41	3,40	3,38
	Heating		W/W	3,84	3,80	3,85	3,79	3,93	3,88	3,84	3,88	3,84	3,81	3,83	3,79
Dimensions	H x W x D		mm	1.887x1.880x890(+60)	1.887x1.880x890(+60)	1.887x1.880x890(+60)	1.887x1.880x890(+60)	1.887x2.870x890(+60)	1.887x2.870x890(+60)	1.887x2.870x890(+60)	1.887x2.870x890(+60)	1.887x2.870x890(+60)	1.887x2.870x890(+60)	1.887x2.870x890(+60)	1.887x2.870x890(+60)
Net weight			kg	630	630	680	680	920	920	920	970	970	970	1.020	1.020
Electrical ratings	Cooling	Running amperes	A	36,5/34,7/33,5	39,4/37,5/36,1	43,0/40,8/39,4	45,9/43,6/42,1	47,5/45,1/43,5	50,5/48,0/46,3	53,0/51,0/49,0	57,0/54,0/52,0	60,0/57,0/55,0	63,0/60,0/58,0	66,0/63,0/60,0	69,0/65,0/63,0
		Power input	kW	21,4	23,1	24,9	26,6	27,8	29,6	31,3	33,0	34,7	36,4	38,2	39,9
	Heating	Running amperes	A	36,2/34,4/33,1	39,3/37,3/36,0	42,6/40,5/39,0	45,6/43,3/41,7	46,9/44,6/43,0	49,7/47,2/45,5	53,0/50,0/48,0	56,0/54,0/52,0	59,0/56,0/54,0	63,0/59,0/57,0	65,0/62,0/60,0	68,0/65,0/63,0
		Power input	kW	21,2	23,0	24,7	26,4	27,5	29,1	31,0	32,7	34,4	36,2	37,9	39,6
Air circulation			m^3/min	160+220	180+220	200+220	220+220	160+160+200	160+160+220	160+180+220	160+200+220	160+220+220	180+220+220	200+220+220	220+220+220
Refrigerant amount at shipment			kg	23,6	23,6	23,6	23,6	35,4	35,4	35,4	36,0	36,0	36,0	36,0	36,0
Piping connections	Suction pipe		mm	Ø31,75	Ø31,75	Ø31,75	Ø31,75	Ø31,75	Ø38,10	Ø38,10	Ø38,10	Ø38,10	Ø38,10	Ø38,10	Ø38,10
	Discharge pipe		mm	Ø25,40	Ø28,58	Ø28,58	Ø28,58	Ø28,58	Ø28,58	Ø31,75	Ø31,75	Ø31,75	Ø31,75	Ø31,75	Ø31,75
	Liquid pipe		mm	Ø19,05	Ø19,05	Ø19,05	Ø19,05	Ø19,05	Ø19,05	Ø19,05	Ø19,05	Ø19,05	Ø19,05	Ø19,05	Ø19,05
	Balance pipe		mm	Ø9,52	Ø9,52	Ø9,52	Ø9,52	Ø9,52	Ø9,52	Ø9,52	Ø9,52	Ø9,52	Ø9,52	Ø9,52	Ø9,52
Ambient temperature operating range				Cooling/Dry: -10˚C~+43˚C (DB). Heating: -20˚C~+15˚C (WB) Simultaneous operation: -10˚C~+24˚C (DB)											
Operating sound	Normal mode		dBA	60	60,5	61	61,5	61	61,5	61,5	62	62,5	62,5	63	63,5
	Silent mode		dBA	57	57,5	58	58,5	58	58,5	58,5	59	59,5	59,5	60	60,5

GLOBAL REMARKS

Rated conditions:	Cooling	Heating
Indoor air temperature	27ºC CB / 19ºC WB	20ºC DB
Outdoor air temperature	35ºC CB	7ºC DB / 6ºC WB

These specifications subject to change without notice.
* For mixed heating and cooling operation with an outdoor temperature in excess of 24˚C DB, please use 50% or more of the horsepower of the outdoor unit for cooling operation.

System example

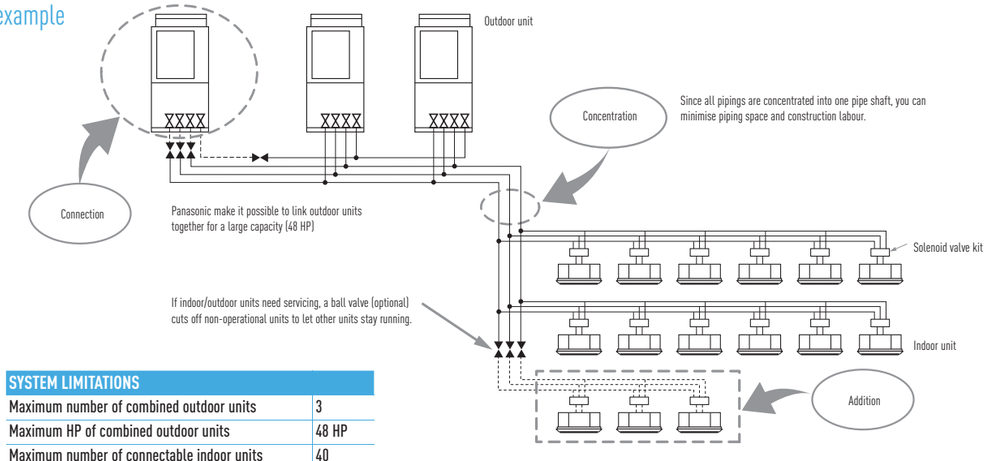

SYSTEM LIMITATIONS	
Maximum number of combined outdoor units	3
Maximum HP of combined outdoor units	48 HP
Maximum number of connectable indoor units	40
Indoor/outdoor unit capacity ratio	50-130%
Maximum actual piping length	150 m
Maximum level difference (when outdoor unit is lower)	50 (40) m
Maximum total piping length in one direction	300 m

If your indoor capacity load changes in the future, it's easy to add on both indoor and outdoor units using the same pipings.

If the additional installment of outdoor and indoor units is expected, the size of refrigerant piping should be decided according to the total capacity after the addition.

Dimensions 3 tubes ECOi MF1 series

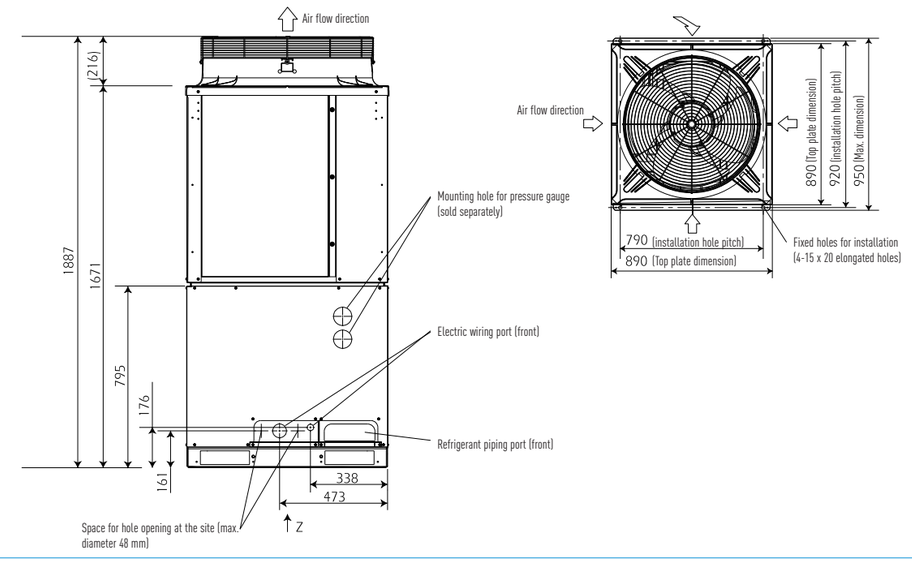

energy saving INVERTER

MINI ECOi* High efficiency

FOR LIGHT COMMERCIAL USE

Panasonic's ECOi Mini, the 2 pipe heat pump small VRF system, is specifically designed for the most demanding applications. Offering between 11 kW and 16 kW cooling capacity in 3 sizes and up to 9 indoor units connected, the ECOi Mini sets standards of performance and flexibility.

Utilising R410A and DC inverter technology, Panasonic offers VRF to a new and growing market.

Forming a new key part of the Panasonic VRF line up, the ECOi Mini is compatible with the same indoor units and controls as the rest of the ECOi range.

*Available in November 2011.

environmentally friendly refrigerant R410A

down to -20°C in heating mode OUTDOOR TEMPERATURE

NEW 2011

Features at a glance

- High efficiency
- Single phase or three phase power supply
- One AMP start current
- DC inverter technology combined with R410A for excellent efficiency
- Diversity ratio 50-130%
- Cooling operation to -10°C
- Full range of indoor units and control options
- Compact outdoor unit 1.330 x 940 x 410 mm

Wide operating range

The operating range for heating operation is to -20°C, the cooling range is to -10°C.
The remote controller temperature setting offers a range from 16°C to 30°C.

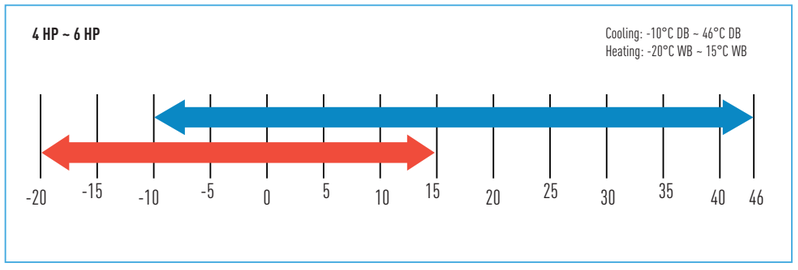

Up to 9 indoor units per system

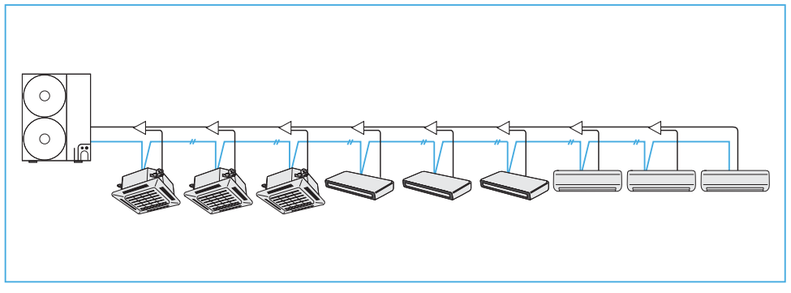

HP			4		5		6	
Model name			**U-4LE1E5**	**U-4LE1E8**	**U-5LE1E5**	**U-5LE1E8**	**U-6LE1E5**	**U-6LE1E8**
Power supply			230 V, 50 Hz	400 V, 50 Hz	230 V, 50 Hz	400 V, 50 Hz	230 V, 50 Hz	400 V, 50 Hz
Cooling capacity		kW	12,10	12,10	14,00	14,00	15,50	15,50
Heating capacity		kW	12,50	12,50	16,00	16,00	18,00	18,00
Dimensions (H/W/D)			1.330 x 940 x 340	1.330 x 940 x 340	1.330 x 940 x 340	1.330 x 940 x 340	1.330 x 940 x 340	1.330 x 940 x 340
Piping connection	Gas	Inches	5/8	5/8	5/8	5/8	3/4	3/4
	Liquid	Inches	3/8	3/8	3/8	3/8	3/8	3/8
Maximum number of indoor units			6	6	8	8	9	9

Preliminary specifiactions, subject to change without notice.

NEW GAS SYSTEM

INTRODUCING PANASONIC GAS DRIVEN VRF

THIS SPECIFICATION GUIDE HIGHLIGHTS ALL ASPECTS OF PANASONIC'S HIGHLY INNOVATIVE GAS DRIVEN VRF SYSTEMS.

In recent years expectations about air conditioning systems have significantly risen and changed from all perspectives, be it from the end user, consultant, specifier or installer. High expectations need to be met in providing optimised comfort climate control that is energy efficient, reduces running costs and gives maximum operating flexibility. Panasonic prides itself as a leading innovator and continuously strives to deliver excellence to our customers and partners by developing market leading products and giving best support in installation and maintenance as well as services information.

GAS HEAT PUMPS, GHP*

NEW GAS SYSTEM

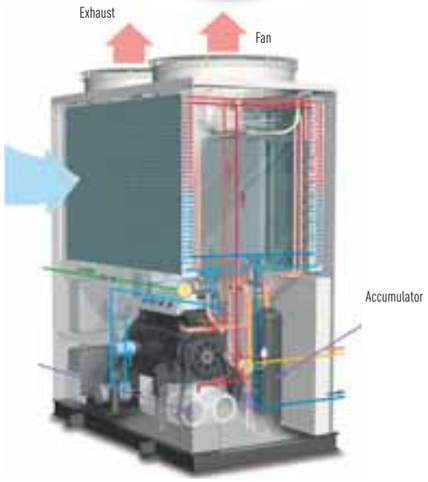

The Gas Heat Pump

Panasonic Gas Heat Pump is natural choice for commercial projects, especially for those projects where power restrictions apply. As you would expect, all of our Gas Driven VRF systems are designed to give the highest reliability rates.

The GHP engine or (internal combustion engine) varies the engine speed to match the building load functions that are comparable with an inverter type electric air conditioner.

* Available in 2012

Easy to position

The advanced Gas Driven VRF systems offers increased efficiency and performance across the range.
Now more powerful than ever before, it can connect up to 48 indoor units.
Improvements include increased part load performance, reduced gas consumption with a Miller-cycle engine and reduced electrical consumption by using DC fan motors.

- Up to 71kW of cooling from a current consumption of 11,0 AMPs
- Single phase power supply across the range
- The option of natural gas or LPG as its main power source
- A water heat exchanger to connect to domestic hot water systems 16–25 HP (2-pipe units only)
- Option of DX or chilled water for indoor heat exchange
- Reduced CO2 emissions

Power supply problems?
If you are short of electrical power, gas heat pump could be the perfect solution:

- Runs on natural gas or LPG and just needs single phase supply
- Enables the building's electrical power supply to be used for other critical electrical demands
- Reduces capital cost to upgrade power substations to run heating and cooling systems
- Reduces power loadings within a building especially during peak periods
- Electricity supply freed up for other uses such as IT servers, commercial refrigeration, manufacturing, lighting etc.

Benefits

High-efficiency operation
All models are equipped with a high-performance air exchanger and a newly developed refrigerant heat exchanger for high efficiency operation, making them one of the most energy efficient solutions on the market.

Lowest nitrogen oxide emissions
The GHP VRF systems have the lowest nitrogen oxide emissions, 66% below the standard. In a pioneering development, the Panasonic GHP features a brand new lean-burn combustion system that utilises air fuel ratio feedback control to reduce NOx emissions to an all time low.

Excellent economy
The Panasonic GHP provides quick and powerful cooling/heating and increases delivery of heat into the space by the efficient recovery of heat from the engine cooling water, which is injected into the refrigerant circuit by an highly efficient plateheat-exchanger.
In addition, the use of engine waste heat ensures that our gas heat pump air conditioner requires no defrost cycle, therefore providing continuous 100% heating performance in severe weather conditions with an outside air temperature as low as -20 °C. During cooling mode the rejected heat from the engine is available for use with in a DHW system and can supply up to 25 kW of hot water at 75 °C. The DHW is also available in heating when the out side air temp is above 7 °C.

High performance
With its advanced heat exchanger design, this new GHP system offers improved efficiency and reduced running costs, which, coupled with improved engine management systems, have greatly improved the system COP rating.

Water chiller option
Our GHP system is also available with a water chiller option, which can be combined with individual outdoor units or as part of a DX chilled water mix of indoor units. The system can be operated via a BMS system or a Panasonic supplied control panel, with chilled water set points from -15°C - 15°C and heating set points 25°C - 55°C.

New electrical power generator model
The biggest breakthrough in recent GHP technology is the launch of the ECO G Power, which provides 4.0kW of power. That's enough electricity to power 8 PCs or 40 indoor units.

No defrost requirements
Below 7°C ambient in heating mode, the outdoor fans switch off, saving further running costs and CO2 emissions.

Comparison of the start times for heating operation

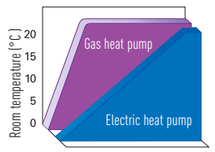

Time axis (in case of the same load)

Comparison of heating capacity

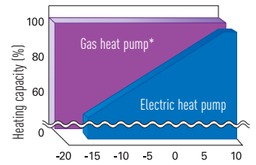

Outside air temperature (°C)
* regarding models 16 and 20

GHP Outdoor Heat Exchanger

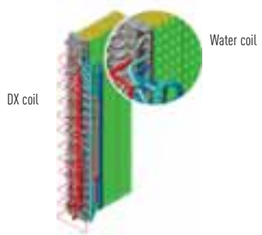

- Integrated DX and hot water coil
- No defrost required
- Faster reaction to demand for heating

NEW GAS SYSTEM

ECO G POWER*

2 PIPE HEAT PUMP SYSTEM WITH ELECTRICAL POWER GENERATOR

The 2 way Gas Driven VRF with an electrical power generator

Panasonic's ECO G Power is a revolution in air conditioning design. Fitted with a permanent magnet, non-bearing type generator, it is the first VRF system that can supply heating, cooling, hot water and now also a supply of electrical power. Each ECO G Power unit has a 4.0kW generator, which provides enough power for 40 indoor units or the equivalent of 8 PCs.

* Available in 2012

HP MODEL NAME				20 U-20GEG2E5	36 U-16GE2E5 U-20GEG2E5	40 U-20GEG2E5 U-20GEG2E5	45 U-20GEG2E5 U-25GE2E5
Capacity	Cooling		kW	56,00	101,0	112,00	127,00
	Heating	STD	kW	63,00	113,00	126,00	143,00
		Low temp*1	kW	67,00	120,00	134,00	142,00
	Hot water (cooling mode)		kW	22,00	37,50	44,00	52,00
Power generater capacity at rating			kW	DC 2,50 (Max 4,30)		DC 5,00 (Max 8,60)	DC 2,50 (Max 4,30)
Electricity	Cooling		kW	1,35	2,70	2,70	2,70
	Heating		kW	1,01	2,02	2,02	2,55
Gas consumption	Cooling		kW	44,00 (38,30)*	75,60	88,00	104,90
	Heating STD		kW	48,70 (43,00)*	84,80	97,40	101,00
	Heating LOW		kW	62,10 (56,40)*	109,40	124,20	121,30
C O P	Cooling			1,33 (1,41)*	1,29	1,23	1,18
	Heating	Air conditioning only		1,34 (1,43)*	1,30	1,27	1,38
	Average			1,34 (1,42)*	1,30	1,25	1,28
Max COP (Inc generater, hot water)	Cooling			1,78	1,80	1,78	1,69
Size	Height		mm	2248			
	Width		mm	1800	1800 + 100 (Min distance) + 1800		
	Depth		mm	1000 (+60)			
Weight			kg	875	1685	1740	1720
Starter amperes			A	30	30	30	30
Pipe	Gas	Inches	mm	1 1/8 (ø28.58)	1 1/4 (ø31.75)	1 1/2 (ø38.10)	1 1/2 (ø38.10)
	Liquid	Inches	mm	5/8 (ø15.88)	3/4 (ø19.05)	3/4 (ø19.05)	3/4 (ø19.05)
	Balance	Inches	mm	3/8 (ø9.52)	3/8 (ø9.52)	3/8 (ø9.52)	3/8 (ø9.52)
	Fuel gas			R3/4 (bolt, thread)			
	Exhaust drain port			ø25 rubber hose			
Operation sound			dB(A)	58	61	61	63
Indoor/outdoor capacity ratio				50-130%			
Number of connections indoor*				32	48		

* In case of not generater working.
* 1 Low temp condition: outdoor temperture 2˚C

Specifications subject to change without notice.

GLOBAL REMARKS	Rated conditions:	Cooling	Heating
	Indoor air temperature	27ºC DB / 19ºC WB	20ºC DB
	Outdoor air temperature	35ºC DB / 24ºC WB	7ºC DB / 6ºC WB

Specifications subject to change without notice.

TECHNICAL ZOOM

- INNOVATIVE TECHNOLOGY THAT REDUCES CO2 EMISSIONS BY UP TO 30%
- 2 WAY AIR CONDITIONING SYSTEM PROVIDING COOLING OR HEATING
- CAN PROVIDE BOTH ELECTRICITY AND HOT WATER IN HEATING AND COOLING MODE
- UP TO 4KW ELECTRICITY GENERATED
- VERY EFFICIENT GENERATOR
- ELECTRICITY IS OUTPUT TO LINE LINKAGE CONVERTER
- HOT WATER PROVIDED WHEN IN COOLING THROUGH OUT TEMPERATURE RANGE AND IN HEATING WHEN THE AMBIENT IS ABOVE 7 °C*
- 22KW HOT WATER GENERATION CAPACITY
- 20HP MODEL PROVIDES 56KW COOLING OR 63KW HEATING
- CAN CONNECT TO UP TO 32 INDOOR UNITS
- 200M MAXIMUM ALLOWABLE PIPING LENGTH (L1)
- IU/OU CAPACITY RATIO 50–130%

* referring to outside temperature

Generates electricity during heating or cooling operation

Generates electricity and air conditioning (heating or cooling) at the same time by using remaining engine power. ECO G Power can generate from 2.3 to 3.95kW electricity at a generation efficiency of more than 40%.

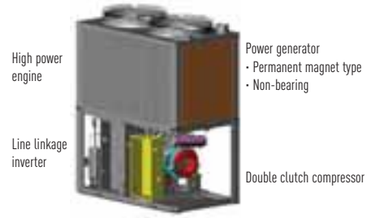

Production of electricity

Generates from 2kW to 4kW depending on air conditioning load

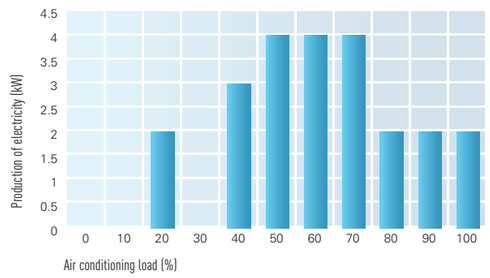

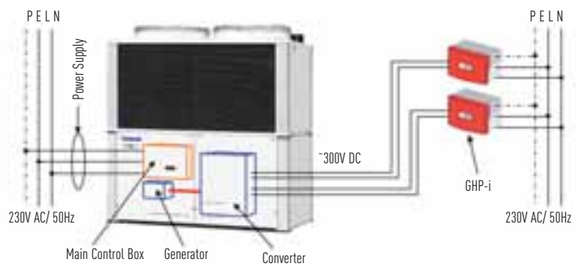

NEW GAS SYSTEM

ECO G W-MULTI*

2 PIPE HEAT PUMP SYSTEM

ECO G W-Multi 2 Way for Heat Pump Applications

The M Series 2 Way not only offers improved performance but also increased flexibility. Now available as multi-systems, many combinations are possible, from 16HP to 50HP, allowing for more power and enabling accurate matching of a system building load. Additional new features include part load engine management and compressor run hour equalisation.

* Available in 2012

HP MODEL NAME				16 U-16GE2E5	20 U-20GE2E5	25 U-25GE2E5	32 U-16GE2E5 U-16GE2E5	36* U-16GE2E5 U-25GE2E5	40* U-20GE2E5 U-20GE2E5	45* U-20GE2E5 U-25GE2E5	50 U-25GE2E5 U25GE2E5
Capacity	Cooling		kW	45,00	56,00	71,00	90,00	101,00	112,00	127,00	142,00
	Heating	STD	kW	50,00	63,00	80,00	100,00	113,00	126,00	143,00	160,00
		Low temp*1	kW	53,00	67,0	75,00	106,00	120,00	134,00	142,00	150,00
	Hot water (cooling mode)		kW	16,00	20,00	25,00	32,00	36,00	40,00	45,00	50,00
Electricity	Cooling		kW	1,35	1,35	1,35	2,70	2,70	2,70	2,70	2,70
	Heating		kW	1,01	1,01	1,54	2,02	2,02	2,02	2,55	3,08
Gas consumption	Cooling		kW	31,60	38,30	60,90	63,20	69,90	76,60	99,20	121,80
	Heating STD		kW	36,10	43,00	58,00	72,20	79,10	86,00	101,00	116,00
	Heating LOW		kW	47,30	56,40	64,90	94,60	103,70	112,80	121,30	129,80
COP	Cooling			1,37	1,41	1,14	1,37	1,39	1,41	1,25	1,14
	Heating			1,35	1,43	1,34	1,35	1,39	1,43	1,38	1,34
	Average			1,36	1,42	1,24	1,36	1,39	1,42	1,31	1,24
Max COP (inc hot water)	Cooling			1,85	1,92	1,54	1,85	1,89	1,92	1,69	1,54
Size	Height		mm	2248	2248	2248	2248	2248	2248	2248	2248
	Width		mm	1800	1800	1800 + 100 (min distance) + 1800 (in a straight installation)			1800 + 100 (min distance) + 1800 (in a straight installation)		
	Depth		mm	1000 (+60)	1000 (+60)	1000 (+60)	1000 (+60)	1000 (+60)	1000 (+60)	1000 (+60)	1000 (+60)
Weight			kg	790	820	850	1580	1610	1640	1670	1700
Starter amperes			A	30	30	30	30	30	30	30	30
Pipe Connections	Gas	Inches	mm	1 1/8 (ø28.58)	1 1/8 (ø28.58)	1 1/8 (28.58)	1 1/4 (ø31.75)	1 1/4 (ø31.75)	1 1/2 (ø38.10)	1 1/2 (ø38.10)	1 1/2 (ø38.10)
	Liquid	Inches	mm	1/2 (ø12.7)	5/8 (ø15.88)	5/8 (ø15.88)	3/4 (ø19.05)	3/4 (ø19.05)	3/4 (ø19.05)	3/4 (ø19.05)	3/4 (ø19.05)
	Balance	Inches	mm	3/8 (ø9.52)	3/8 (ø9.52)	3/8 (ø9.52)	3/8 (ø9.52)	3/8 (ø9.52)	3/8 (ø9.52)	3/8 (ø9.52)	3/8 (ø9.52)
	Fuel gas			R3/4 (bolt thread)	R3/4 (bolt thread)	R3/4 (bolt thread)	R3/4 (bolt thread)	R3/4 (bolt thread)	R3/4 (bolt thread)	R3/4 (bolt thread)	R3/4 (bolt thread)
	Exhaust drain port			ø25 rubber hose	ø25 rubber hose	ø25 rubber hose	ø25 rubber hose	ø25 rubber hose	ø25 rubber hose	ø25 rubber hose	ø25 rubber hose
Operation sound		dB(A)		57	58	62	60	61	61	63	65
Indoor/outdoor capacity ratio				50-200 %	50-200 %	50-200 %	50-130 %	50-130 %	50-130 %	50-130 %	50-130 %
Number of connections indoor*				36	36	36	48	48	48	48	48

* In these combinations, EGW190M2G2W is able to connect to a W-multi system Specifications subject to change without notice instead of a EW190M2G2W.
*1 Low temp condition: outdoor temperature 2˚C.

Specifications subject to change without notice.

GLOBAL REMARKS

Rated conditions:	Cooling	Heating
Indoor air temperature	27ºC DB / 19ºC WB	20ºC DB
Outdoor air temperature	35ºC DB / 24ºC WB	7ºC DB / 6ºC WB

Specifications subject to change without notice.

TECHNICAL ZOOM

- REDUCED GAS CONSUMPTION BY MILLER-CYCLE ENGINE
- REDUCED ELECTRICAL POWER CONSUMPTION BY USING DC MOTORS
- NEW LIGHTWEIGHT DESIGN BY USE OF ALUMINIUM ENGINE BLOCK REDUCES WEIGHT BY 110KG
- PART LOAD EFFICIENCIES INCREASED
- CONNECTABILITY INCREASED - NOW UP TO 48 INDOOR UNITS
- MULTI-SYSTEMS WITH COMBINATIONS FROM 13HP UP TO 50HP
- 200M MAXIMUM ALLOWABLE PIPING LENGTH (L1)
- DIVERSITY RATIO 50-200% (SINGLE MODELS ONLY; EXCLUDING ECO G POWER)
- EXTENDED PIPE RUNS (TOTAL 780M)
- QUIET MODE OFFERS A FURTHER 2DB(A) REDUCTION
- CHILLER OPTION
  - 9HP (25KW COOLING - 30KW HEATING)
  - 18HP (50KW COOLING - 60KW HEATING)
- 10,000 RUN HOURS BETWEEN ENGINE SERVICE INTERVALS (EQUIVALENT TO ONE MAINTENANCE EVERY 3.2 YEARS*)
- FULL HEATING CAPACITY DOWN TO -20°C
- NO DEFROST CYCLE
- ASSUMING 3120 RUNNING HRS PER YEAR - 12 HRS X 5 DAYS X 52 WEEKS

* referring to outside temperature

Sample installation

ECO G W-MULTI
2 Pipe Heat Pump System

Easy to add additional units in the future

Load can easily be increased in the future by the addition of indoor and outdoor units without having to plumb pipe shafts.

* When specifying refrigerant pipe work, please choose the size according to the horsepower after the increase of units.

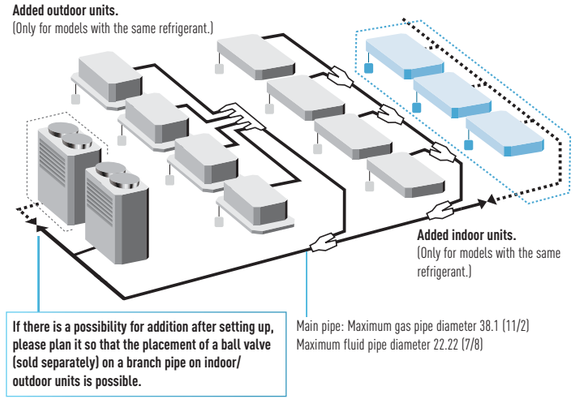

Example of a system

Maximum possible number of outdoor units to be combined: 2 units
Maximum horsepower of combined outdoor units: 50hp
Maximum possible number of indoor units to be connected: 48 units *1
Indoor/outdoor units capacity ratio: 50%~130% *2

*1 When 2 outdoor units are connected
*2 Capacity of indoor units connection is :
Minimum) 50% of the capacity of the smallest outdoor unit within the system
Maximum) 130%: total capacity of the system outdoor units.

Indoor units are same as multi series for buildings.

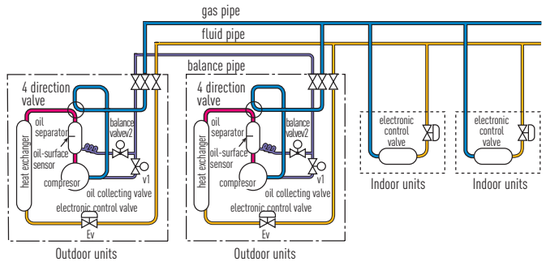

System diagram

Introducing the oil/refrigerant balance control system

The amounts of oil between compressors are kept in balance by a signal from an oil temperature sensor, allowing the exchange of oil and refrigerant through a balance pipe.

Saving Energy

・Energy savings achieved by the Appropriate Capacity
・Equational Program Function

Energy savings are achieved by the Appropriate Load Divider Function, which enables efficient operation by concentrating the cooling/heating capacity to one outdoor unit and stopping the other. Compared to conventional machines with a similar COP, this function allows an achievement of energy savings and thus reduces the running costs, especially in part-load seasons like spring and autumn.

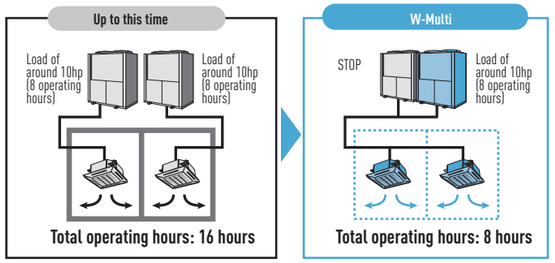

Non-stop operation, even during maintainance

・System will not stop even during maintenance, due to Manual Backup Operating Function
・Maintenance is possible during weekdays because it can continue operating during maintenance.
・Automatic Backup Operating Function enables continuous operation.

If one outdoor unit stops the backup function will automatically start on the remaining unit and continue operating. During service intervals, the system being serviced can be isolated by a closing valve in the outdoor unit, enabling continuous operation with the still operative outdoor unit.

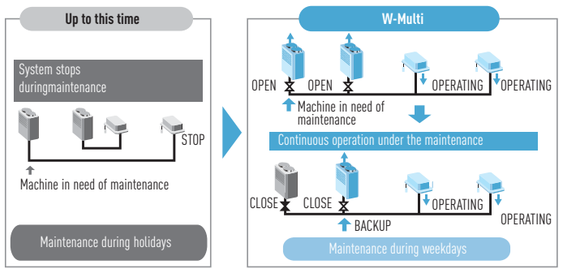

Long lifetime

・Renewal period prolonged due to rotation function.

Rotation function, which is run from outdoor units with low operating time, will average the operating hours of each outdoor unit. This will result in prolongation of maintenance or replacement period.

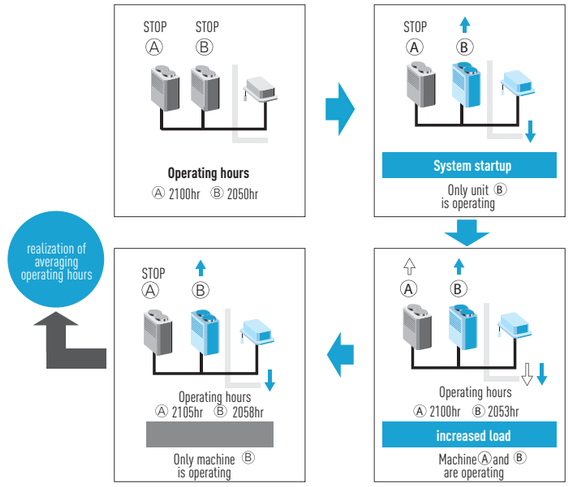

Example of the rotation function

Ease of construction

・By using common header pipe work the installation cost and time is significantly reduced

By combining all pipes, which were needed for each indoor unit, into a common pipe in each system, the number of pipes are reduced by half* which leads to ease of construction. Furthermore, space of pipes within pipe shafts can be reduced by 2/3.*

*System with approximately 40hp (20hp x 2 units)

Combining all pipes, which were needed for each outdoor unit, into a pipe in each system. (Number of pipes is reduced by half)

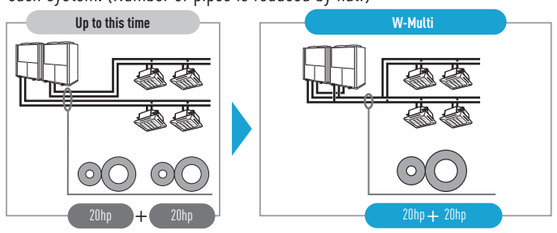

Example of a system with approximately 40hp

Hot Water Supply Function

・System Advantage

The engine waste heat, which is normally exhausted into the atmosphere, is recovered via the heat exchanger and effectively used as hot water, so the GHP Chiller acts as a sub system that alleviates the load on the client's main hot water system, and therefore offers 'free' hot water.

Capacity at cooling standard point		Outlet temp 75˚C	
Outdoor unit	U-16GE2E5	kW	16.00
	U-20GE2E5		20.00
	U-20GEG2E5		22.00
	U-25GE2E5		25.00
Hot water piping allowable pressure			0.7
Hot water circulation rate		MPa	3.9
Hot water tube size		m^3/h	Rp 3/4

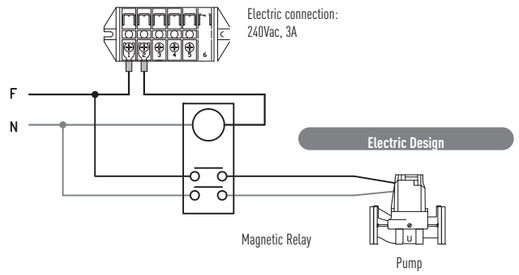

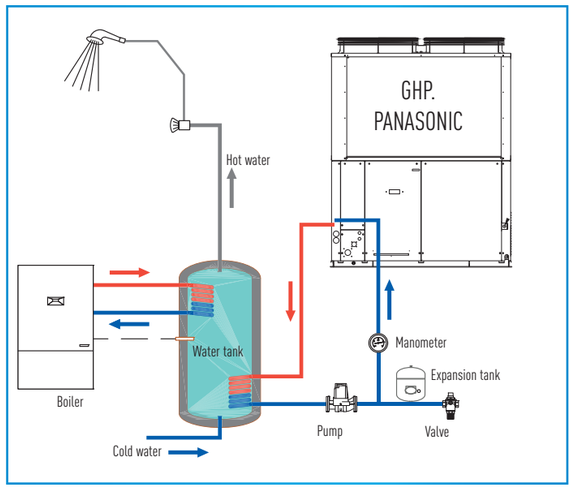

・All the items illustrated in this drawing (except the outdoor unit) are not supplied by Panasonic
・During start up, set temperature value of the water in the outdoor unit's parameter.

ECO G 3 WAY MULTI*

3 PIPE HEAT RECOVERY SYSTEM WITH SIMULTANEOUS HEATING & COOLING

The only 3 way GHP system in Europe, the M Series ECO G 3 Way offers even more performance and outstanding features when you need simultaneous heating and cooling. Now with capacities available from 16HP to 25HP, Panasonic offers the greatest choice and flexibility to solve any power problem or site requirement.

* Available in 2012

NEW GAS SYSTEM

Additional parts

Solenoid valve controller
CZ-CAPE2 / CZ-CAPEK2

Solenoid valve kit
CZ-P56HR2 (for an indoor capacity of max. 5,6 kW)
CZ-P160HR2 (for an indoor capacity of max. 16 kW)
* For conference rooms and other locations where low noise is required, pay attention to the installation location and install in a corridor etc.

HP MODEL NAME				16 U-16GF2E5	20 U-20GF2E5	25 U-25GF2E5
Capacity	Cooling		kW	45,00	56,00	71,00
	Heating	STD	kW	50,00	63,00	80,00
		Low temp*	kW	53,00	67,00	75,00
Electricity	Cooling		kW	1,35	1,35	1,35
	Heating		kW	1,010	1,01	1,54
Gas consumption	Cooling		kW	31,60	38,30	60,90
	Heating STD		kW	36,10	43,00	58,00
	Heating LOW		kW	47,30	56,40	64,90
C O P	Cooling			1,37	1,41	1,14
	Heating			1,35	1,43	1,34
	Average			1,36	1,42	1,24
Size	Height		mm	2248		
	Width		mm	1800		
	Depth		mm	1000 (+60)		
Weight			kg	845	845	875
Starter amperes			A	30	30	30
Pipe	Gas	Inches	mm	1 1/8 (ø28.58)	1 1/8 (ø28.58)	1 1/8 (ø28.58)
	Liquid	Inches	mm	7/8 (ø22.22)	1" (ø25.40)	1" (ø25.40)
	Balance	Inches	mm	3/4 (ø19.05)	3/4 (ø19.05)	3/4 (ø19.05)
	Fuel gas			R3/4		
	Exhaust drain port			ø 25		
Operation sound			dB(A)	57	58	62
Indoor/outdoor capacity ratio				50-200% *1		
Number of connections indoor*				36		

*Low temp condition: outdoor temperture 2˚C
*1 Indoor unit can be connected to up to 16kW model (model size 60)

Specifications subject to change without notice.

GLOBAL REMARKS

Rated conditions:	Cooling	Heating
Indoor air temperature	27ºC DB / 19ºC WB	20ºC DB
Outdoor air temperature	35ºC DB / 24ºC WB	7ºC DB / 6ºC WB

Specifications subject to change without notice.

TECHNICAL ZOOM

- SIMULTANEOUS HEATING AND COOLING FOR TOTAL CONTROL
- REDUCED GAS CONSUMPTION BY MILLER-CYCLE ENGINE
- REDUCED ELECTRICAL POWER CONSUMPTION BY USING DC MOTORS
- NEW USE OF ALUMINIUM ENGINE BLOCK REDUCES WEIGHT BY 110KG
- PART LOAD EFFICIENCIES INCREASED
- CONNECTABILITY INCREASED TO UP TO 36 INDOOR UNITS
- NOW AVAILABLE IN 16, 20 AND 25HP
- 200M MAXIMUM ALLOWABLE PIPING LENGTH, L1
- DIVERSITY RATIO 50–200%
- EXTENDED PIPE RUNS (TOTAL 780M)
- QUIET MODE OFFERS A FURTHER 2DB(A) REDUCTION
- 10 000 RUN HOURS BETWEEN ENGINE SERVICE INTERVALS (EQUIVALENT TO ONE MAINTENANCE EVERY 3.2 YEARS*)
- FULL HEATING CAPACITY DOWN TO -21 °C
- NO DEFROST CYCLE
- IDEAL FOR ALL BULDING TYPES
- OPTION OF USING LPG AS A POWER SUPPLY (INCREASES FLEXIBILITY AND AVOIDS PROBLEMS OF POTENTIAL SITE RESTRICTIONS IN THE FUTURE. THE PURER FUEL IS ALSO EXCELLENT FOR FURTHER REDUCTIONS IN CO_2 EMISSIONS)
- ASSUMING 3120 RUNNING HRS PER YEAR - 12 HRS X 5 DAYS X 52 WEEKS

Excellent performance

Panasonic 3 WAY multi system is capable of simultaneous heating/cooling and individual operation of each indoor unit by only one outdoor unit. As a result, efficient individual air conditioning is possible in buildings having diverse room temperatures.

Improved maintenance intervals
The unit only needs to be serviced every 10,000 hours. This is the best in the industry.

Up to 35% energy saving

Effective heat recovery system enables up to 35% energy saving
The waste heat removed from the cooled room is effectively used as a heat source for the room to be heated. As a result, the load on the compressor and heat exchanger on the outdoor unit can be reduced, enabling excellent heat recovery.

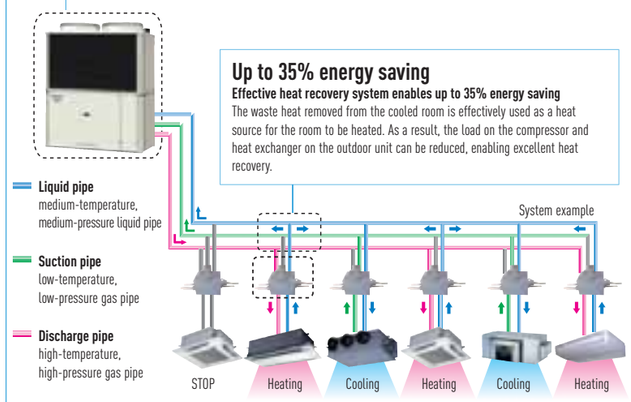

Solenoid Valve Kit CZ-P56HR2, CZ-P160HR2

To be fitted on all 'zones' to allow simultaneous heating and cooling
Up to 36 indoor units are capable of simultaneous heating/cooling operation.

ECO G WATER HEAT EXCHANGER*

FOR HYDRONIC APPLICATIONS

The Panasonic ECO G Water Heat Exchanger can provide water at a wide range of temperatures suitable for a wide variety of commercial applications ranging from comfort air conditioning to food processing or the replacement of boilers and other systems.

NEW GAS SYSTEM

* Available in 2012

EGO G WATER HEAT EXCHANGER MODEL NO.			U-250WX2E5	U-500WX2E5
U-12GE2E5	Cooling capacity	kW	25,00	30,00
	Heating capacity	kW	30,00	35,50
U-16GE2E5	Cooling capacity	kW	25,00	37,50
	Heating capacity	kW	30,00	45,00
U-20GE2E5 and U-20GEG2E5	Cooling capacity	kW	25,00	50,00
	Heating capacity	kW	30,00	60,00
U-25GE2E5	Cooling capacity	kW	25,00	56,00
	Heating capacity	kW	30,00	67,00
Must read:	Cooling	kW	0,01	0,01
	Heating	kW	0,01	0,01
Power supply			220/230/240V Single Phase 50Hz	220/230/240V Single Phase 50Hz
Size	Height	mm	1000	1000
	Width	mm	550	550
	Depth	mm	965	965
Weight		kg	125	160
Standard cold/hot water flow rate		m^3/h	4,3	8,6
Hydrostatic loss		kPa	8,5	11,3
Holding water quantity inside the unit		m^3	0,01	0,02
Minimum holding water quantity outside the unit		m^3	0,28	0,50
Pipe connections		inches mm	7/8 (ø22.22)	1 1/8 (ø28.58)
		inches mm	3/8 (ø9.52)	5/8 (ø15.88)
Water circuit limit pressure		MPa	0,686	0,686
Anti-freezing protection system			Protective thermostat	Protective thermostat

Operating condition	Cooling	Heating
Water temperature of water heat exchanger unit	Outlet 7°C	Outlet 45°C
Outdoor side intake air temperature	35°C DB	7°C DB, 6°C WB

Specifications subject to change without notice.

GLOBAL REMARKS

Rated conditions:	Cooling	Heating
Indoor air temperature	27ºC DB / 19ºC WB	20ºC DB
Outdoor air temperature	35ºC DB / 24ºC WB	7ºC DB / 6ºC WB

Specifications subject to change without notice.

TECHNICAL ZOOM

- IN COOLING (CHILLER) MODE PROVIDES WATER FROM +5 °C TO +15 °C
- IN HEATING MODE CAN PROVIDE HOT WATER UP TO 55°C, FOR EXAMPLE FOR UNDER FLOOR HEATING APPLICATIONS
- INCLUDES WATER FLOW PROTECTION TO PREVENT FREEZING
- S-LINK COMMUNICATION
- ALL CONTROLLERS AND OPTIONAL PCBS CAN BE USED FOR CONTROL
- HIGH FLEXIBILITY
- LIGHTER AND SMALLER
- SPLIT SYSTEM MEANS REDUCED INSTALLATION COST AND THE USE OF A LESS POWERFUL CIRCULATION PUMP
- ONE TOUCH CHANGEOVER BETWEEN COOLING AND HEATING OPERATION
- THE SYSTEM CAN ACCOMMODATE UP TO 120M (ACTUAL LENGTH) OF PIPING BETWEEN THE OUTDOOR UNIT AND THE WATER HEAT EXCHANGER, ALLOWING FLEXIBILITY OF INSTALLATION LOCATION

Mixed System Application

(SYSTEM EXAMPLE)

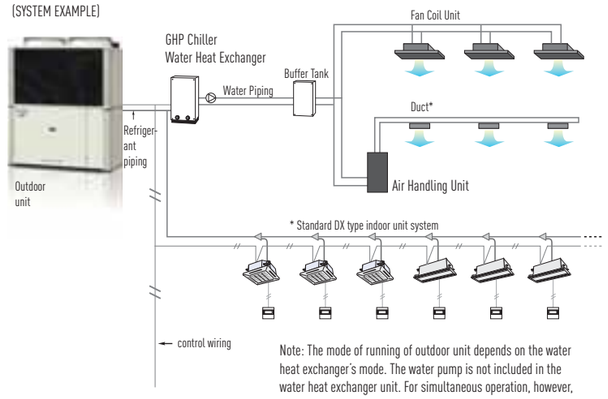

Note: The mode of running of outdoor unit depends on the water heat exchanger's mode. The water pump is not included in the water heat exchanger unit. For simultaneous operation, however, the maximum capacity is 130%. Please inquire details of this system design of Panasonic.

- Combined with a water heat exchanger unit, the Panasonic GHP can create a flexible system--the ideal replacement for existing chiller and boiler systems.
- The GHP Multi System can have an indoor unit plus a GHP chiller. When the two systems are operated independently, an outdoor unit with 130% capacity can be connected.

ECO G WATER HEAT EXCHANGER

For hydronic applications

Application Examples

Connection to 'close control' computer equipment.
COMPUTER ROOM APPLICATIONS

When all available electrical power needed to be utilised for the IT equipment for a leading international bank, the cooling load of over 450kW needed to be powered by gas. The outdoor units were connected via Water heat exchangers to cooling coils inside the 'close control' units thereby maintaining a conditioned environment for temperature and humidity. By utilising the hot water function over 100kW of hot water are supplied to the building and therefore the additional benefit of considerable CO_2 savings is ensured.

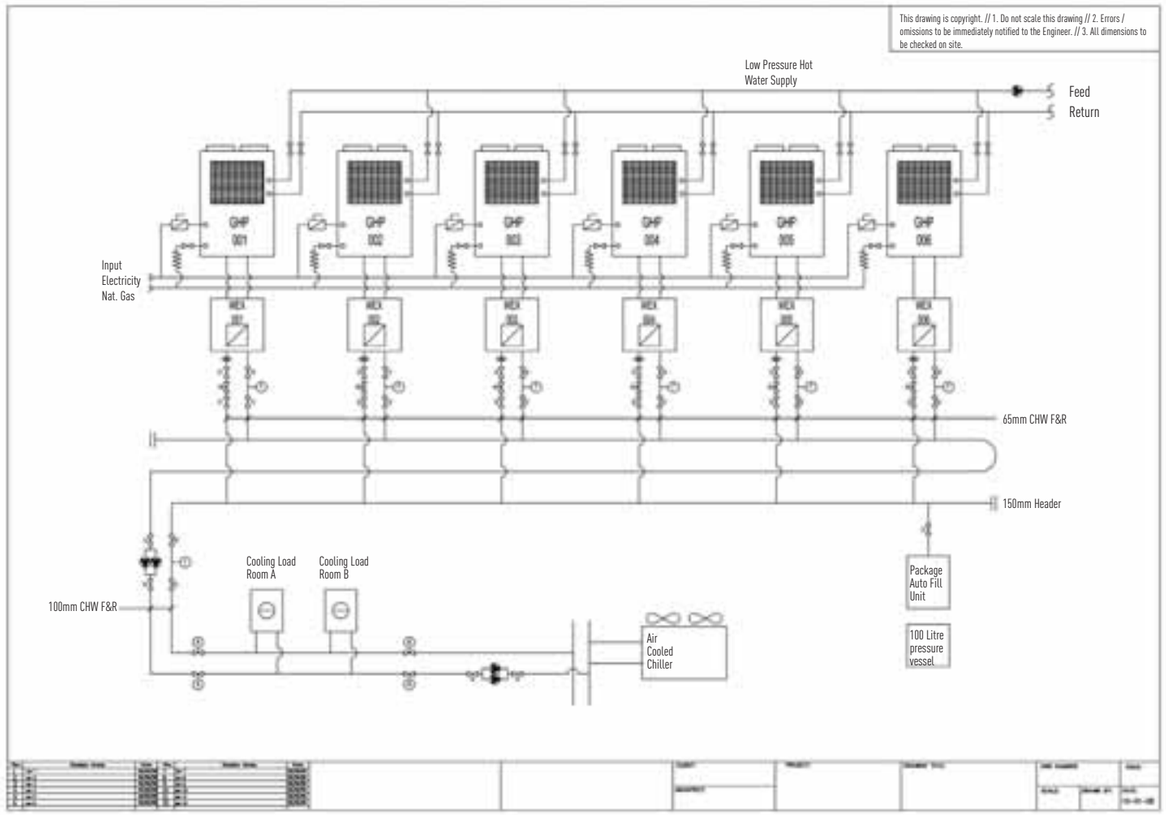

This Part L design has reduced CO_2 Emissions by 26% or 166 tonnes per annum compared to electric chillers.

Specifications subject to change without notice. R410A

Connection to chilled water coils in air handling equipment.

AIR HANDLING APPLICATION

When a top London restaurant opened it needed large volumes of fresh air to ensure the optimum dining environment. GHP units connected to the cooling coils within the air handling equipment ensured the air was introduced in the right condition in both summer and winter.

Chiller replacement. Chilled water supply to fan coils.

CHILLER REPLACEMENT

When it came for some old chillers to be replaced at the end of their operation life, GHPs with Water heat exchangers enabled the project to be carried out in stages whilst still utilising the existing water pipe work and fan coils. This enabled the project to be delivered on time, to a restricted budget and avoided all issues regarding refrigerant in confined spaces.

INSTALLATION INSTRUCTION OF GHP WATER HEAT EXCHANGER

1: In case of standard installation
2: L1 longer than 90m (Equivalent length) or more than 130% connection ratio

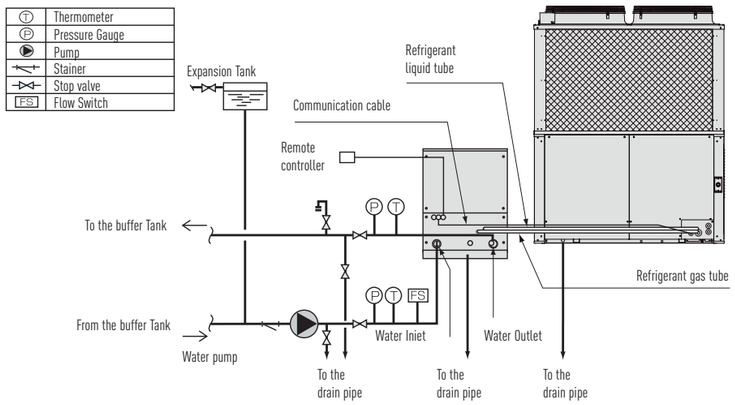

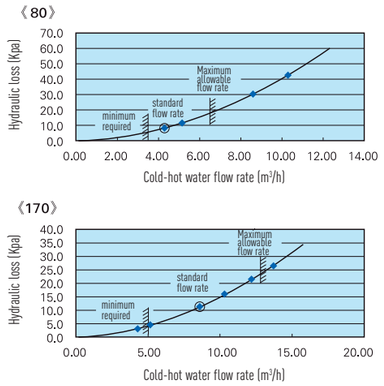

Water piping construction

Warning

- Only use water as the heat medium for the hot and cold water and the chilled water. Otherwise, this could result in fires or explosions.

Caution

- Use water that complies with water standards for hot and cold water and for cooling water.
  Poor quality water can cause breakdown or water leaks.
- Dispose of brine and cleaning fluid in accordance with the applicable regulations.
  If these items are illegally disposed, not only will this result in legal matters, but it will also have bad effect on the environment and health.

(1) Water pipes can be connected to either the front or the rear of the water heat exchanger unit. When shipped from the factory, rubber stoppers are fitted to the openings. Openings that are not being used should be closed with the rubber stopper.
(2) Connect the hot and cold water circulation pump to the inlet pipe side of the water heat exchanger.
(3) Make the opening of the water pipe larger than the opening of the connector, (50A), and use as few bends as possible, in order to reduce the pipe resistance as much as possible. Also, use unions or flanges near the unit, so that the unit can be easily removed.
(4) Install a suitable water removal valve and air removal valve in the water pipes. If air becomes mixed with the liquid in the pipes, this can cause noise, corrosion, and reduced performance.
(5) Make sure that there is always at least the minimum quantity of water ($0.3m^3$) in the system. (if the water quantity is small, provide a storage tank or similar) If there is insufficient water in the unit this will cause the system to stop frequently or to breakdown.
(6) Provide a water thermometer and flow rate adjustment valve, so that during test running it is possible to adjust the cold (hot) water flow rate while watching the water temperature. Also, after adjusting, do not touch the adjustment valve.
(7) Adjust the water pressure so that the pressure in the water heat exchanger is less than, $0.69N/mm^2$.
(8) Install an expansion tank within the water pipe system.
(9) The hot and cold water flow rate should be within the range shown in Figure 3. If used outside this range then it could cause breakdown due to corrosion or freezing of the water heat exchanger unit.
(10) Provide sufficient insulation to the water pipes. If Insufficient insulation is provided then this will result in loss of heat. Also, in a severe cold period damage due to freezing of the pipes can occur.
(11) Within the water heat exchanger unit there is a circuit such that, if the external air temperature and the temperature of the water within the unit fall, the hot and cold water circulation pump automatically starts, to prevent freezing within the water heat exchanger unit. However, if the unit location or if the insulation to the water pipes is insufficient, the temperature of the water in the pump and hot and cold water pipes might fall and freeze before the temperature of the water in the unit falls. In this situation provide a circuit which detects the outdoor air temperature at the position of the whole water circulation system where the water temperature falls fastest, so that the hot and cold water circulation pump can automatically start. Attach suitable suspension fittings to the pipes, so that no unreasonable load is applied to the water heat exchanger unit.

PRECAUTIONS

Securing adequate space for servicing

Several units can be installed in series
Install the outdoor unit in a well-ventilated location that will help the heat exchanger work at its optimum level. Be sure to secure enough space for maintenance work, referring to the diagram below for minimum clearances. When installing up to three units in series provide a passageway between units for servicing.

Installing 8 or more outdoor units in series
When installing eight or more outdoor units in series, or when installing units near a wall or other locations where air circulation may be inadequate, give sufficient consideration to the possibility of the units shorting out.

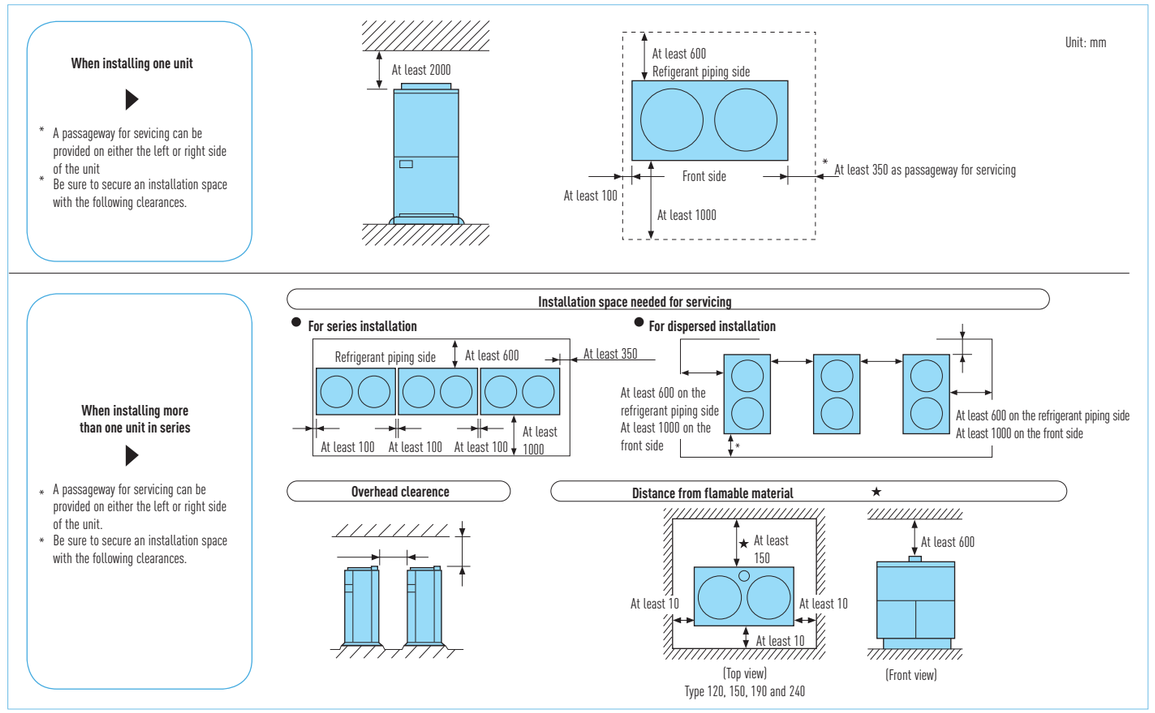

Avoid the following installation locations
Install the unit safely and securely in a place where it will be adequately protected and be able to perform at its designed specifications.

• A place that has no space for servicing
Maintenance work can require a large number of instruments and tools. Lack of sufficient space for servicing may prevent the unit from being properly maintained and cared for.

• A place that is unsafe for maintenance work
If the unit is installed on the roof of a building (even if the spot is level) and it is not prevented from falling with a guard rail or similar means, not only will maintenance work become impossible but the unit may fall or other accidents may occur.

• A place where a ladder must be used to access the unit
An installation that requires maintenance workers to go up and down a ladder or stairs makes safe and reliable maintenance work not only difficult but dangerous as well.

• A poorly ventilated location
If the top, side or front of the unit is close to a wall or other obstruction, poor ventilation and lack of sufficient air circulation may not only cause trouble but also prevent the unit from operating normally.

• Near a street lamp or tree
Insects attracted by street lamps in large numbers and leaves from trees can get sucked into the unit and cause it to malfunction.

Other locations to avoid: • Places where chemicals are used • Places where the unit will disturb others • Near a chimney or exhaust outlet • Places exposed to strong winds • An installation that has no vibration proof pad • Near a wall other than a soundproof wall • Places where salt damage may occur and no preventive measures are taken • Places with no protection from snow.

In addition, if the area below the outdoor unit is to be used, make sure the installation pad is constructed so that water drops and oily or greasy dirt will drip down into the area below. Do not use a pad fabricated by metal punching or a similar process.

FEATURES
High technology features

Wider operation Cooling can be performed throughout the year for computer rooms, banqet halls, etc. Wider operation range covers outdoor temperatures of as low as -10ºC DB for cooling and -21ºC WB for heating.

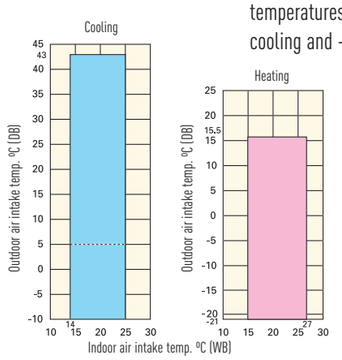

Rated condition

Even when power failure occurs, preset programmed operation can be reactivated once power is resumed.

Self-diagnosing function By using electronic control valves for details of past warnings are stored and can be verified on the liquid crystal display. This makes it easier to diagnose malfunctions, greatly reducing service labor.

SIMPLE, CONVENIENT FEATURES (INDOOR UNITS)

Automatic fan operation Convenient microprocessor control automatically adjusts fan speed to High, Medium or Low, corresponding to room sensor and maintains comfortable airflow throughout the room.

Built-in drain pump Max. head 50 cm (or 75 cm: U type) from the bottom of the unit.

Air Sweep The air sweep function moves the flap up and down in the air outlet, directing air in a "sweeping" motion around the room and providing comfort in every corner.

Air Sweep

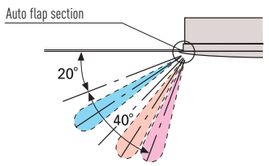

When the unit is first turned on, flap position is automatically adjusted inn accordance with the cooling or heating operation. This initial flap position can be preset within a certain range, for both cooling and heating. Auto button is included for continuous movement of flap to vary airflow direction.

Mild dry By intermittent control of compressor and indoor unit's fan, "New Mild Dry" gives you comfort. It realizes efficient dehumidification according to room temperature.

Maintenance and inspection is a must for gas heat pump air-conditioning systems.
Just like an automobile, a heat pump air-conditioning system requires periodic servicing so that it can perform efficiently.

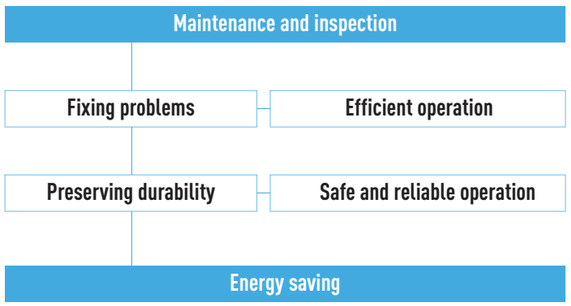

Main maintenance and inspection items
1. Changing the engine oil
2. Checking the coolant level
3. Inspecting the engine system
4. Checking the safety protection system
5. Checking and adjusting the running conditions, collecting operating data, etc.

Since a heat pump air-conditioning system uses a gas engine as its power source, it should be periodically insepected to avoid trouble and keep it running efficiently. We recommend a maintenance contract for your Panasonic Gas Heat Pump, a great value because it not only ensures that problems will be fixed, but it helps reduce running costs ad improve comfort and economical efficiency as well.

GHP CHECKER SOFTWARE
Panasonic's diagnosis software

The handy tool for optimising the running of your system:
Diagnosis for start ups, maintenance and system supervising
Features:
- Diagnosis with a PC
- Endless recording function allows analysis diagnosis even for long term running
- The GHP checker software needs no additional communication adaptor
- The communication between the PC and GHP is done by RS232

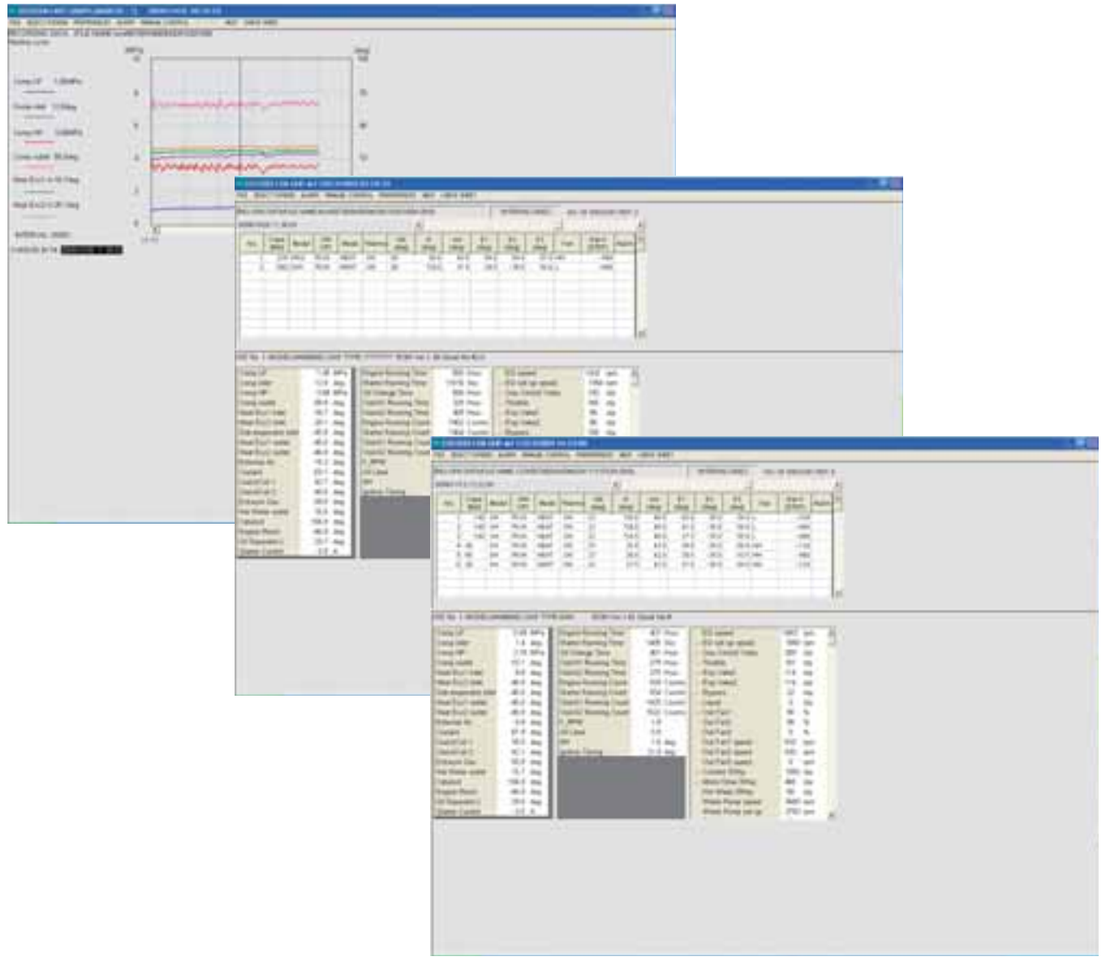

NEW 2011

INDOOR UNITS

WIDE CHOICE OF MODELS DEPENDING ON THE INDOOR REQUIREMENTS

M1 TYPE SLIM LOW STATIC DUCTED

Ultra-slim profile: 200 mm height for all models

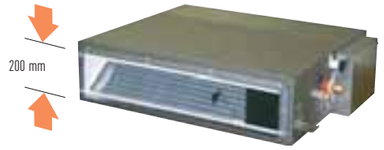

Drain pump with increased power!

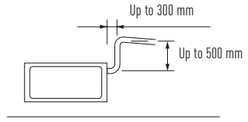

4-WAY CASSETTE

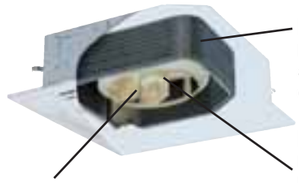

Higher efficiency split fin.
Improved heat-transfer coefficient due to adoption of high efficiently grooved heat exchanger tube.

New DC-Fan motor.
It is realized more optimum air-flow by a new DC-fan motor with independent control.

High-efficient & Silent turbo Fan.
It is realized more air volume and more silent due to new development of a bigger fan chassis than previous one and optimization design of airflow path.

Individual flap control.
Flexible Air flow direction control by individual flap control is possible. 4 Flaps can be controlled individually by setting on wired timer remote controller. It can make more flexible Air-flow control to be matched to several demands in a room.

F1 TYPE SLIM LOW SILHOUETTE DUCTED

Drain pump with increased power!

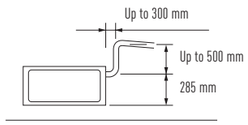

By adoption of a high-lift drain pump, the drain piping rise height could be increased to 785 mm from the lower surface of the body.

The static pressure outside the unit can be increased!
By using the booster cable, the static pressure outside the unit can be increased.

Type	22.28.36	45.56	73.90	106	140.160
Standard	49	40	50	79	78
With booster cable use (HT connector)	69	62	92	122	113

K1 TYPE 4-WALL MOUNTED

The compact design and flat face match the interior, and installation without a sense of incongruity even in a small space.

All flat panel & weariless design until 36K btu type.
The compact design and flat face match the interior, and installation without a sense of incongruity even in a small space.

External expansion valve

CZ-P56SVK2
(for unit sizes 22 to 56)

CZ-P160SVK2
(for unit sizes 73 to 106)

Washable front panel.
The indoor unit's front panel can be easily removed and washed for trouble-free cleaning.

Anti-mold filters are standard equipment.

ECOi INDOOR UNITS RANGE

CLASS		22	28	36	45	56	73	90	106	140	160	224	280	WIRELESS REMOTE CONTROL		
CAPACITY (COOLING/HEATING)	kW BTU/h	2.2/2.5 7,500/8,500	2.8/3.2 9,600/11,000	3.6/4.2 12,000/14,000	4.5/5.0 15,000/17,000	5.6/6.3 19,000/21,000	7.3/8.0 25,000/27,000	9.0/10.0 30,000/34,000	10.6/11.4 36,000/39,000	14.0/16.0 47,800/54,600	16.0/18.0 54,600/61,500	22.4/25.0 76,400/85,300	28.0/31.5 95,500/107,500	Wireless sender + built-in receiver	Wireless sender + separately installed receiver	Functions
U1 TYPE 4-WAY CASSETTE		S-22MU1E5	S-28MU1E5	S-36MU1E5	S-45MU1E5	S-56MU1E5	S-73MU1E5		S-106MU1E5	S-140MU1E5	S-160MU1E5			✘	✘	
Y1 TYPE 4-WAY CASSETTE 60X60		S-22MY1E5	S-28MY1E5	S-36MY1E5	S-45MY1E5	S-56MY1E5								✘	✘	
L1 TYPE 2-WAY CASSETTE		S-22ML1E5	S-28ML1E5	S-36ML1E5	S-45ML1E5	S- 56ML1E5	S-73ML1E5							✘	✘	
D1 TYPE 1-WAY CASSETTE			S-28MD1E5	S-36MD1E5	S-45MD1E5	S-56MD1E5	S-73MD1E5							✘	✘	
F1 TYPE LOW SILHOUETTE DUCTED		S-22MF1E5	S-28MF1E5	S-36MF1E5	S-45MF1E5	S-56MF1E5	S-73MF1E5	S-90MF1E5	S-106MF1E5	S-140MF1E5	S-160MF1E5				✘	
M1 TYPE SLIM LOW STATIC DUCTED		S-22MM1E5	S-28MM1E5	S-36MM1E5	S-45MM1E5	S-56MM1E5									✘	
E1 TYPE HIGH STATIC PRESSURE DUCTED							S-73ME1E5		S-106ME1E5	S-140ME1E5		S-224ME1E5	S-280ME1E5		✘	
T1 TYPE CEILING				S-36MT1E5	S-45MT1E5	S-56MT1E5	S-73MT1E5		S-106MT1E5	S-140MT1E5				✘	✘	
K1 TYPE WALL MOUNTED		S-22MK1E5	S-28MK1E5	S-36MK1E5	S-45MK1E5	S-56MK1E5	S-73MK1E5		S-106MK1E5					✘	✘	
P1 TYPE FLOOR STANDING		S-22MP1E5	S-28MP1E5	S-36MP1E5	S-45MP1E5	S-56MP1E5	S-71MP1E5								✘	
R1 TYPE CONCEALED FLOOR STANDING		S-22MR1E5	S-28MR1E5	S-36MR1E5	S-45MR1E5	S-56MR1E5	S-71MR1E5								✘	

Wide choice of models depending on the indoor requirements

- Self-diagnosing function
- Automatic fan operation
- Mild Dry
- Comfortable auto-flap control
- Automatic restart function for power failure
- Air swing
- Built-in drain pump

A class energy saving INVERTER

U1 TYPE 4-WAY CASSETTE // SEMI CONCEALED CASSETTE

The award winning range of U1 type cassettes are smaller, shallower and lighter than previous models and feature a 950 x 950 mm panel throughout. The DC fan motor and air discharge louvre ensure quiet, optimum air distribution.

NEW 2011

environmentally friendly refrigerant R410A | easy maintenance SELF-DIAGNOSING | for more comfort AUTOMATIC FAN | perfect humidity control MILD DRY | further comfort AUTO-FLAP CONTROL | practical operation AUTOMATIC RESTART | comfort everywhere AIR SWEEP | easy to install BUILT-IN DRAIN PUMP

AIR INTAKE CHAMBER
Air intake plenum CZ-FDU2
Air intake box CZ-ATU2
Both Air intake plenum and Air intake box are necessary

PANEL
CZ-KPU2

OPTIONAL CONTROLLER
Timer remote controller
CZ-RTC2

Wireless remote controller
CZ-RWSU2
CZ-RWSC2

Simplified remote controller
CZ-RE2C2

MODEL NAME			S-22MU1E5	S-28MU1E5	S-36MU1E5	S-45MU1E5	S-56MU1E5	S-73MU1E5	S-106MU1E5	S-140MU1E5	S-160MU1E5
Power source			220/230/240 V, 1 phase - 50, 60 Hz								
Cooling capacity		kW	2.2	2.8	3.6	4.5	5.6	7.3	10.6	14	16
		BTU/h	7,500	9,600	12,000	15,000	19,000	25,000	36,000	47,800	54,600
Heating capacity		kW	2.5	3.2	4.2	5.0	6.3	8.0	11.4	16.0	18.0
		BTU/h	8,500	11,000	14,000	17,000	21,000	27,000	39,000	54,600	61,400
Power input	Cooling	kW	0.030/0.031/0.034	0.030/0.031/0.034	0.030/0.031/0.034	0.033/0.035/0.038	0.039/0.041/0.044	0.053/0.054/0.057	0.100/0.102/0.106	0.109/0.110/0.114	0.117/0.119/0.124
	Heating	kW	0.019/0.019/0.021	0.019/0.019/0.021	0.019/0.019/0.021	0.022/0.023/0.024	0.030/0.031/0.031	0.044/0.044/0.046	0.093/0.094/0.096	0.102/0.102/0.105	0.106/0.107/0.110
Running current	Cooling	A	0.25/0.26/0.26	0.25/0.26/0.26	0.25/0.26/0.26	0.29/0.29/0.29	0.34/0.34/0.34	0.46/0.46/0.45	0.84/0.82/0.82	0.90/0.88/0.88	0.97/0.94/0.94
	Heating	A	0.18/0.18/0.17	0.18/0.18/0.17	0.18/0.18/0.17	0.21/0.21/0.21	0.28/0.28/0.27	0.41/0.40/0.39	0.80/0.77/0.76	0.86/0.83/0.83	0.89/0.86/0.86
Fan	Type		Turbo fan	Turbo fan	Turbo fan	Turbo fan	Turbo fan	Turbo fan	Turbo fan	Turbo fan	Turbo fan
	Air flow rate (H/M/L)	m^3/h	780/720/660	780/720/660	780/720/660	900/840/780	1,020/900/780	1,260/1,020/840	1,980/1,620/1,260	2,100/1,680/1,320	2,160/1,740/1,380
	Motor output	kW	0.05	0.05	0.05	0.05	0.05	0.05	0.09	0.09	0.09
Sound power level (L/M/H)		dB	38/40/42	38/40/42	38/40/42	38/40/42	38/40/42	39/42/45	44/47/50	45/49/53	47/51/55
Sound pressure level (L/M/H)		dB(A)	27/28/29	27/28/29	27/28/29	27/28/30	27/29/32	28/31/35	32/38/43	33/39/44	34/40/45
Dimensions	H x W x D	mm	256 (+33.5) x 840 (950) x 840 (950)						319 (+33.5) x 840 (950) x 840 (950)		
Pipe connections	Liquid	inches (mm)	1/4 (Ø6.35)	1/4 (Ø6.35)	1/4 (Ø6.35)	1/4 (Ø6.35)	1/4 (Ø6.35)	3/8 (Ø9.52)	3/8 (Ø9.52)	3/8 (Ø9.52)	3/8 (Ø9.52)
	Gas	inches (mm)	1/2 (Ø12.7)	1/2 (Ø12.7)	1/2 (Ø12.7)	1/2 (Ø12.7)	1/2 (Ø12.7)	5/8 (Ø15.88)	5/8 (Ø15.88)	5/8 (Ø15.88)	5/8 (Ø15.88)
	Drain piping		VP-25	VP-25	VP-25	VP-25	VP-25	VP-25	VP-25	VP-25	VP-25
Net weight		kg	24	24	24	24	24	25	29	29	29

GLOBAL REMARKS

Rated conditions:	Cooling	Heating
Indoor air temperature	27°C DB / 19°C WB	20°C DB
Outdoor air temperature	35°C DB / 24°C WB	7°C DB / 6°C WB

Specifications subject to change without notice.

TECHNICAL FOCUS

- COMPACT DESIGN
- REDUCED SOUND LEVELS (FROM PREVIOUS MODELS)
- DC FAN MOTOR FOR INCREASED EFFICIENCY
- POWERFUL DRAIN PUMP GIVES 850 mm LIFT
- LIGHTWEIGHT DESIGN
- FRESH AIR KNOCKOUT
- BRANCH DUCT CONNECTION
- OPTIONAL AIR-INTAKE PLENUM CZ-FDU2

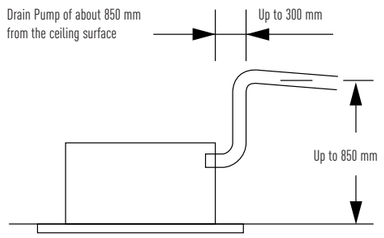

The flap can be removed easily for washing with water.

The top class lightest weight with 26 kg (sizes 140 and 160), body height only 256 mm (sizes 22 to 73), so that installation is possible even in narrow ceilings.

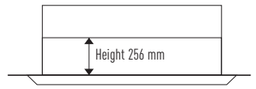

Easy fine adjustment of the body suspension height!
The four corners of the ceiling panel have adopted removable corner pockets. Even after installation, fine adjustment of the suspension height is possible easily by removing the corner pockets.

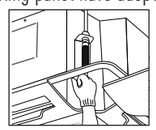

Light, thin, and attractive design with easy installation
The direction of the air intake grille can be changed. A wireless remote control light receiver can be installed by changing the corner cover. The installation can be done in a short time.

Easy servicing of the drain pan
A large-diameter (45 mm) drain pan inspection port has been provided, and drain pan and drain pump can be cleaned easily.

A class energy saving INVERTER

Y1 TYPE 4-WAY CASSETTE 60X60 // MINI SEMI CONCEALED CASSETTE

Designed to fit exactly into a 600 x 600 mm ceiling grid without the need to alter the bar configuration, the Y1 is ideal for small commercial and retrofit applications. In addition, the improvements to efficiency make this one of the most advanced units in the industry.

NEW 2011

environmentally friendly refrigerant R410A | easy maintenance SELF-DIAGNOSING | for more comfort AUTOMATIC FAN | perfect humidity control MILD DRY | further comfort AUTO-FLAP CONTROL | practical operation AUTOMATIC RESTART | comfort everywhere AIR SWEEP | easy to install BUILT-IN DRAIN PUMP

PANEL
CZ-KPY2

OPTIONAL CONTROLLER

Timer remote controller
CZ-RTC2

Wireless remote controller
CZ-RWSY2
CZ-RWSC2

Simplified remote controller
CZ-RE2C2

MODEL NAME			S-22MY1E5	S-28MY1E5	S-36MY1E5	S-45MY1E5	S-56MY1E5
Power source			220/230/240 V, 1 phase - 50, 60 Hz				
Cooling capacity		kW	2.2	2.8	3.6	4.7	5.6
		BTU/h	7,500	9,600	12,000	16,000	19,000
Heating capacity		kW	2.5	3.2	4.2	5.0	6.3
		BTU/h	8,500	11,000	14,000	17,000	21,000
Power input	Cooling	kW	0.024/0.025/0.025	0.024/0.025/0.025	0.026/0.027/0.027	0.030/0.031/0.031	0.037/0.038/0.038
	Heating	kW	0.014/0.015/0.015	0.014/0.015/0.015	0.017/0.017/0.018	0.020/0.021/0.021	0.029/0.029/0.029
Running current	Cooling	A	0.16/0.16/0.15	0.16/0.16/0.15	0.18/0.18/0.17	0.21/0.21/0.20	0.29/0.29/0.28
	Heating	A	0.13/0.13/0.12	0.13/0.13/0.12	0.15/0.15/0.14	0.18/0.18/0.17	0.26/0.26/0.25
Fan	Type		Centrifugal fan	Centrifugal fan	Centrifugal fan	Centrifugal fan	Centrifugal fan
	Airflow rate (H/M/L)	m^3/min	480/420/360	480/420/360	540/480/420	640/510/450	750/630/540
	Motor output	kW	0.030	0.030	0.030	0.030	0.030
Sound power level (L/M/H)		dB(A)	36/38/41	36/38/41	37/40/43	39/43/47	44/48/52
Sound pressure level (L/M/H)		dB(A)	25/27/30	25/27/30	26/29/32	28/32/36	33/37/41
Dimensions	H x W x D	mm	283+(30) x 575 (625) x 575 (625)	283+(30) x 575 (625) x 575 (625)	283+(30) x 575 (625) x 575 (625)	283+(30) x 575 (625) x 575 (625)	283+(30) x 575 (625) x 575 (625)
Pipe connections	Liquid	inches (mm)	1/4 (Ø6.35)	1/4 (Ø6.35)	1/4 (Ø6.35)	1/4 (Ø6.35)	1/4 (Ø6.35)
	Gas	inches (mm)	1/2 (Ø12.7)	1/2 (Ø12.7)	1/2 (Ø12.7)	1/2 (Ø12.7)	1/2 (Ø12.7)
	Drain piping		VP-20	VP-20	VP-20	VP-20	VP-20
Net weight		kg	18,4	18,4	18,4	18,4	18,4

GLOBAL REMARKS

Rated conditions:	Cooling	Heating
Indoor air temperature	27ºC DB / 19ºC WB	20ºC DB
Outdoor air temperature	35ºC DB / 24ºC WB	7ºC DB / 6ºC WB

Specifications subject to change without notice.

TECHNICAL FOCUS

- MINI CASSETTE FITS INTO A 600x600 mm CEILING GRID
- FRESH AIR KNOCK OUT
- MULTIDIRECTIONAL AIR FLOW
- ANTI-MOULD AND ANTI-BACTERIA WASHABLE FILTERS
- POWERFUL DRAIN PUMP GIVES 850 mm LIFT
- TURBO FANS AND HEAT EXCHANGER FINS WITH IMPROVED DESIGN
- DC FAN MOTORS WITH VARIABLE SPEED, NEW HEAT EXCHANGERS, ETC. ENSURE AN EFFICIENT POWER CONSUMPTION
- OPTIONAL AIR-INTAKE PLENUM CZ-ATU2

Special designed flap

The flap can be removed easily for washing with water.

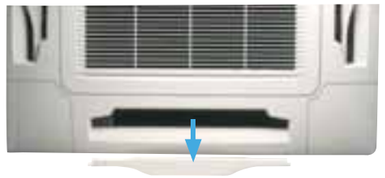

A lightweight unit at 18.4 kg the unit is also very slim with a height of only 283 mm, making installation possible even in narrow ceilings.

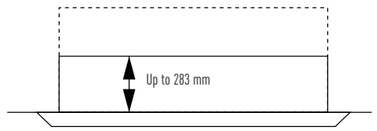

A drain height of approx. 850 mm from the ceiling surface

The drain height can be increased by approximately 350 mm over the conventional value by using a high-lift drain pump, and long horizontal piping is possible.

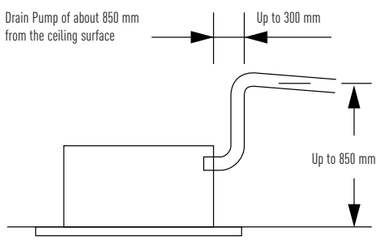

A class energy saving INVERTER

L1 TYPE 2-WAY CASSETTE

Realisation of thin, compact and light units. Remarkable size and weight reductions have been achieved by improvement of the design around the fan, the weight of all models now being 30 kg.

NEW 2011

PANEL
CZ-02KPL2
Big size panel (for S-73ML1E5) CZ-03KPL2

OPTIONAL CONTROLLER

Timer remote controller
CZ-RTC2

Wireless remote controller
CZ-RWSL2
CZ-RWSC2

Simplified remote controller
CZ-RE2C2

environmentally friendly refrigerant R410A
easy maintenance SELF-DIAGNOSING
for more comfort AUTOMATIC FAN
perfect humidity control MILD DRY
further comfort AUTO-FLAP CONTROL
practical operation AUTOMATIC RESTART
comfort everywhere AIR SWEEP
easy to install BUILT-IN DRAIN PUMP

MODEL NAME			S-22ML1E5	S-28ML1E5	S-36ML1E5	S-45ML1E5	S-56ML1E5	S-73ML1E5
Power source			220/230/240V, 1 phase - 50, 60Hz					
Cooling capacity		kW	2.2	2.8	3.6	4.5	5.6	7.3
		BTU/h	7,500	9,600	12,000	15,000	19,000	25,000
Heating capacity		kW	2.5	3.2	4.2	5.0	6.3	8.0
		BTU/h	8,500	11,000	14,000	17,000	21,000	27,000
Power input	Cooling	kW	0.086/0.090/0.095	0.086/0.092/0.097	0.088/0.093/0.099	0.091/0.097/0.103/	0.091/0.097/0.103	0.135/0.145/0.154
	Heating	kW	0.055/0.058/0.062	0.055/0.060/0.064	0.057/0.061/0.066	0.060/0.065/0.070	0.060/0.065/0.070	0.100/0.109/0.117
Running current	Cooling	A	0.45/0.45/0.45	0.44/0.45/0.45	0.44/0.45/0.45	0.45/0.45/0.45	0.45/0.45/0.45	0.64/0.65/0.66
	Heating	A	0.29/0.29/0.30	0.28/0.29/0.30	0.28/0.29/0.30	0.29/0.29/0.30	0.29/0.29/0.30	0.46/0.48/0.49
Fan	Type		Sirocco fan	Sirocco fan	Sirocco fan	Sirocco fan	Sirocco fan	Sirocco fan
	Airflow rate (H/M/L)	m^3/min	480/420/360	540/480/420	580/520/460	660/540/480	660/540/480	1,140/960/840
	Motor output	kW	0.03	0.03	0.03	**0.03**	0.03	0.05
Sound power level (L/M/H)		dB(A)	35/38/40	37/40/44	39/42/45	40/44/46	40/44/46	44/46/49
Sound pressure level (L/M/H)		dB(A)	24/27/30	26/29/33	28/31/34	29/33/35	29/33/35	33/35/38
Dimensions	H x W x D	mm	350+(8) x 840 (1,060) x 600 (680)	350+(8) x 840 (1,060) x 600 (680)	350+(8) x 840 (1,060) x 600 (680)	350+(8) x 840 (1,060) x 600 (680)	350+(8) x 840 (1,060) x 600 (680)	350+(8) x 1,140 (1,360) x 600 (680)
Pipe connections	Liquid	inches (mm)	1/4 (Ø6.35)	1/4 (Ø6.35)	1/4 (Ø6.35)	1/4 (Ø6.35)	1/4 (Ø6.35)	3/8 (Ø9.52)
	Gas	inches (mm)	1/2 (Ø12.7)	1/2 (Ø12.7)	1/2 (Ø12.7)	1/2 (Ø12.7)	1/2 (Ø12.7)	5/8 (Ø15.88)
	Drain piping		VP-25	VP-25	VP-25	VP-25	VP-25	VP-25
Net weight		kg	30	30	30	30	30	30

GLOBAL REMARKS

Rated conditions:	Cooling	Heating
Indoor air temperature	27ºC DB / 19ºC WB	20ºC DB
Outdoor air temperature	35ºC DB / 24ºC WB	7ºC DB / 6ºC WB

Specifications subject to change without notice.

TECHNICAL FOCUS

- AIRFLOW AND DISTRIBUTION IS AUTOMATICALLY ALTERED DEPENDING ON THE OPERATIONAL MODE OF THE UNIT
- DRAIN UP IS POSSIBLE UP TO 500 mm FROM THE DRAIN PORT
- SIMPLE MAINTENANCE

Airflow and distribution is automatically altered depending on the operational mode of the unit.

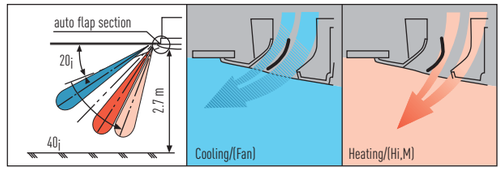

Drain up is possible up to 500 mm from the drain port.

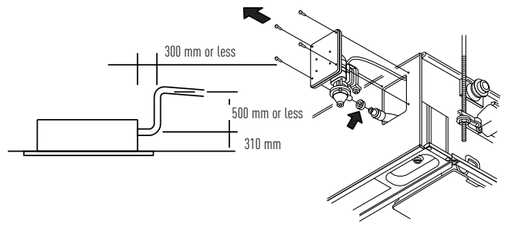

Maintenance of the drain pump is possible from two sides, from the left side (piping side) and from the inside of the unit.

Simple maintenance
The drain pan is equipped with site wiring and can be removed. The fan case has a split construction, and the fan motor can be removed easily when the lower case is removed.

A class energy saving INVERTER

D1 TYPE 1-WAY CASSETTE // SEMI CONCEALED SLIM CASSETTE

Designed for installation within the ceiling void, the D1 range of slimline 1 way blow cassettes feature powerful yet quiet fans for up to 4,2 metres.

NEW 2011

PANEL
CZ-KPU2

OPTIONAL CONTROLLER

Timer remote controller
CZ-RTC2

Wireless remote controller
CZ-RWST2
CZ-RWSC2

Simplified remote controller
CZ-RE2C2

environmentally friendly refrigerant R410A
easy maintenance SELF-DIAGNOSING
for more comfort AUTOMATIC FAN
perfect humidity control MILD DRY
further comfort AUTO-FLAP CONTROL
practical operation AUTOMATIC RESTART
comfort everywhere AIR SWEEP
easy to install BUILT-IN DRAIN PUMP

MODEL NAME			S-28MD1E5	S-36MD1E5	S-45MD1E5	S-56MD1E5	S-73MD1E5
Power source			220/230/240 V, 1 phase - 50, 60 Hz				
Cooling capacity		kW	2.8	3.6	4.5	5.6	7.3
		BTU/h	9,600	12,000	15,000	19,000	25,000
Heating capacity		kW	3.2	4.2	5.0	6.3	8.0
		BTU/h	11,000	14,000	17,000	21,000	27,000
Power input	Cooling	kW	0.050/0.051/0.052	0.050/0.051/0.052	0.050/0.051/0.052	0.058/0.060/0.061	0.086/0.087/0.089
	Heating	kW	0.039/0.040/0.042	0.039/0.040/0.042	0.039/0.040/0.042	0.046/0.048/0.049	0.075/0.076/0.077
Running current	Cooling	A	0.40/0.39/0.39	0.40/0.39/0.39	0.40/0.39/0.39	0.46/0.46/0.46	0.71/0.70/0.69
	Heating	A	0.36/0.35/0.35	0.36/0.35/0.35	0.36/0.35/0.35	0.42/0.41/0.41	0.66/0.65/0.63
Fan	Type		Sirocco fan	Sirocco fan	Sirocco fan	Sirocco fan	Sirocco fan
	Airflow rate (H/M/L)	m^3/min	720/600/540	720/600/540	720/660/600	780/690/600	1,080/900/780
	Motor output	kW	0.05	0.05	0.05	0.05	0.05
Sound power level (L/M/H)		dB(A)	44/45/47	44/45/47	45/46/47	45/47/49	47/51/56
Sound pressure level (L/M/H)		dB(A)	33/34/36	33/34/36	34/35/36	34/36/38	36/40/45
Dimensions	H x W x D	mm	200+(20) x 1,000 (1,230) x 710 (800)	200+(20) x 1,000 (1,230) x 710 (800)	200+(20) x 1,000 (1,230) x 710 (800)	200+(20) x 1,000 (1,230) x 710 (800)	200+(20) x 1,000 (1,230) x 710 (800)
Pipe connections	Liquid	inches (mm)	1/4 (Ø6.35)	1/4 (Ø6.35)	1/4 (Ø6.35)	1/4 (Ø6.35)	3/8 (Ø9.52)
	Gas	inches (mm)	1/2 (Ø12.7)	1/2 (Ø12.7)	1/2 (Ø12.7)	1/2 (Ø12.7)	5/8 (Ø15.88)
	Drain piping		VP-25	VP-25	VP-25	VP-25	VP-25
Net weight		kg	26,5	26,5	26,5	26,5	27,5

GLOBAL REMARKS

Rated conditions:	Cooling	Heating
Indoor air temperature	27ºC DB / 19ºC WB	20ºC DB
Outdoor air temperature	35ºC DB / 24ºC WB	7ºC DB / 6ºC WB

Specifications subject to change without notice.

TECHNICAL FOCUS

- ULTRA-SLIM
- SUITABLE FOR STANDARD AND HIGH CEILINGS
- BUILT-IN DRAIN PUMP PROVIDES 590 MM LIFT
- EASY TO INSTALL AND MAINTAIN
- HANGING HEIGHT CAN BE EASILY ADJUSTED
- USES A DC FAN MOTOR TO IMPROVE ENERGY-EFFICIENCY

Drain height

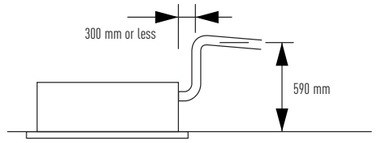

With 3 types of air-blow systems, the units can be used in various ways.

(1) One-direction down-blow system

Powerful one-direction "downblow" system reaches the floor even from high ceilings (up to 4,2 m).

(2) Two-direction ceilingmounted system

"Down-blow" and "front-blow" systems are combined in a ceilingmounted unit to blow air over a wide area.

(3) One-direction ceiling-mounted system

This powerful ceiling-mounted "front-blow" system efficiently air-conditions the space in front of the unit.

(Additional accessories required)

A class energy saving INVERTER

F1 TYPE LOW SILHOUETTE DUCTED

The new F1 type is designed specifically for applications requiring fixed square ducting. With internal filter and 10kW cooling capacity the UR Type is ideal for installations such as apartments.

NEW 2011

environmentally friendly refrigerant R410A | easy maintenance SELF-DIAGNOSING | for more comfort AUTOMATIC FAN | perfect humidity control MILD DRY | practical operation AUTOMATIC RESTART | easy to install BUILT-IN DRAIN PUMP

OPTIONAL CONTROLLER

Timer remote controller
CZ-RTC2

Wireless remote controller
CZ-RWSC2

Simplified remote controller
CZ-RE2C2

MODEL NAME			S-22MF1E5	S-28MF1E5	S-36MF1E5	S-45MF1E5	S-56MF1E5	S-73MF1E5	S-90MF1E5	S-106MF1E5	S-140MF1E5	S-160MF1E5
Power source			220/230/240V, 1 phase - 50Hz									
Cooling capacity		kW	2.2	2.8	3.6	4.5	5.6	7.3	9.0	10.6	14.0	16.0
		BTU/h	7,500	9,600	12,000	15,000	19,000	25,000	30,000	36,000	47,800	54,600
Heating capacity		kW	2.5	3.2	4.2	5.0	6.3	8.0	10.0	11.4	16.0	18.0
		BTU/h	8,500	11,000	14,000	17,000	21,000	27,000	34,000	39,000	54,600	61,500
Power input	Cooling	kW	0.094/0.100/0.106	0.094/0.100/0.106	0.094/0.100/0.106	0.096/0.102/0.109	0.096/0.102/0.109	0.180/0.195/0.210	0.187/0.203/0.219	0.312/0.327/0.342	0.308/0.325/0.341	0.308/0.325/0.341
	Heating	kW	0.082/0.088/0.094	0.082/0.088/0.094	0.082/0.088/0.094	0.084/0.090/0.097	0.084/0.090/0.097	0.168/0.183/0.198	0.176/0.191/0.207	0.300/0.315/0.330	0.296/0.313/0.329	0.296/0.313/0.329
Running current	Cooling	A	0.45/0.46/0.47	0.45/0.46/0.47	0.45/0.46/0.47	0.44/0.45/0.46	0.44/0.45/0.46	0.83/0.86/0.89	0.88/0.91/0.94	1.44/1.45/1.46	1.42/1.43/1.44	1.42/1.43/1.44
	Heating	A	0.40/0.41/0.42	0.40/0.41/0.42	0.40/0.41/0.42	0.39/0.40/0.41	0.39/0.40/0.41	0.78/0.81/0.84	0.84/0.87/0.90	1.39/1.40/1.41	1.36/1.37/1.38	1.36/1.37/1.38
Fan motor	Type		Sirocco fan	Sirocco fan	Sirocco fan	Sirocco fan	Sirocco fan	Sirocco fan	Sirocco fan	Sirocco fan	Sirocco fan	Sirocco fan
	Airflow rate (H/M/L)	m³/min	600/510/420	600/510/420	600/510/420	720/630/540	720/630/540	1,080/900/780	1,200/1,020/840	1,800/1,560/1,260	1,980/1,800/1,500	1,980/1,800/1,500
	Motor output	kW	0.05	0.05	0.05	0.05	0.05	0.07	0.07	0.14	0.14	0.14
	External static pressure	Pa	49 (69)	49 (69)	49 (69)	40 (62)	40 (62)	50 (92)	50 (92)	79 (122)	78 (113)	78 (113)
Sound power level (L/M/H)		dB	33/37/40	33/37/40	33/37/40	36/39/41	36/39/41	38/41/45	38/41/45	42/44/49	44/48/51	44/48/51
Sound pressure level (L/M/H/(H-booster))		dB(A)	22/26/29/(32)	22/26/29/(32)	22/26/29/(32)	25/28/30/(33)	25/28/30/(33)	27/30/34/(38)	27/30/34/(38)	31/33/38/(42)	33/37/40/(44)	33/37/40/(44)
Dimensions	H x W x D	mm	310x700x630	310x700x630	310x700x630	310x700x630	310x700x630	310x1,000x630	310x1,000x630	310x1,480x630	310x1,480x630	310x1,480x630
Pipe connections	Liquid	inches (mm)	1/4 (Ø6.35)	1/4 (Ø6.35)	1/4 (Ø6.35)	1/4 (Ø6.35)	1/4 (Ø6.35)	3/8 (Ø9.52)	3/8 (Ø9.52)	3/8 (Ø9.52)	3/8 (Ø9.52)	3/8 (Ø9.52)
	Gas	inches (mm)	1/2 (Ø12.7)	1/2 (Ø12.7)	1/2 (Ø12.7)	1/2 (Ø12.7)	1/2 (Ø12.7)	5/8 (Ø15.88)	5/8 (Ø15.88)	5/8 (Ø15.88)	5/8 (Ø15.88)	5/8 (Ø15.88)
	Drain piping		VP-25	VP-25	VP-25	VP-25	VP-25	VP-25	VP-25	VP-25	VP-25	VP-25
Net weight		kg	24	24	24	25	25	32	32	47	47	47

GLOBAL REMARKS

Rated conditions:	Cooling	Heating
Indoor air temperature	27°C DB / 19°C WB	20°C DB
Outdoor air temperature	35°C DB / 24°C WB	7°C DB / 6°C WB

Specifications subject to change without notice.

TECHNICAL FOCUS

- INDUSTRY-LEADING LOW SOUND LEVELS FROM 22 DB(A)
- BUILT-IN DRAIN PUMP PROVIDES 785 mm LIFT
- EASY TO INSTALL AND MAINTAIN
- AIR OFF SENSOR AVOIDS COLD AIR DUMPING
- CONFIGURABLE AIR TEMPERATURE CONTROL

System example

An inspection port (450 mm x 450 mm or more) is required at the lower side of the indoor unit body.

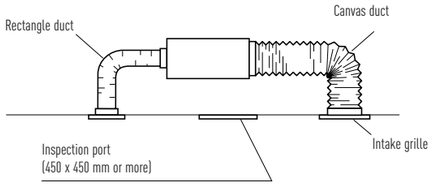

7-22°C AIR OFF TEMPERATURE CONTROL AS STANDARD

- Able to control air off temperature
- Reduces cold drafts
- Accurate room temperature controls

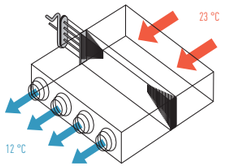

Lowest noise levels in the industry. The static pressure outside the unit can be increased

By using the booster cable, the static pressure outside the unit can be increased.

TYPE	7-9-12	16-18	25	36	48-60
Standard	49 Pa	40 Pa	50 Pa	79 Pa	78 Pa
With booster cable use	69 Pa	62 Pa	92 Pa	122 Pa	113 Pa

More powerful drain pump

By adoption of a high-lift drain pump, the drain piping rise height can be increased to 785 mm from the lower surface of the body.

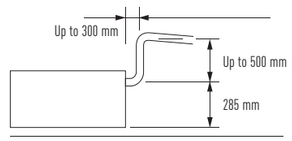

Unified body height of approximately 310 mm for all models

Even models with different capacities can be installed smoothly in the ceiling.

External electrical equipment box makes maintenance easy

A class energy saving INVERTER

M1 TYPE SLIM LOW STATIC DUCTED // CONCEALED DUCT

The ultra slim M1 type is one of the leading products of its type in the industry. With a depth of only 200 mm it provides greater flexibility and can be used in far more applications. In addition, its high-efficiency and extremely quiet sound levels make it very popular with many users, including hotels and small offices.

NEW 2011

environmentally friendly refrigerant R410A | easy maintenance SELF-DIAGNOSING | for more comfort AUTOMATIC FAN | perfect humidity control MILD DRY | practical operation AUTOMATIC RESTART | comfort everywhere AIR SWEEP | easy to install BUILT-IN DRAIN PUMP

OPTIONAL CONTROLLER

Timer remote controller
CZ-RTC2

Wireless remote controller
CZ-RWSC2

Simplified remote controller
CZ-RE2C2

MODEL NAME			S-22MM1E5	S-28MM1E5	S-36MM1E5	S-45M,MM1E5	S-56MM1E5
Power source			220/230/240 V, 1 phase - 50, 60 Hz				
Cooling capacity		kW	2.2	2.8	3.6	4.5	5.6
		BTU/h	7,500	9,600	12,000	15,000	19,000
Heating capacity		kW	2.5	3.2	4.2	5.0	6.3
		BTU/h	8,500	11,000	14,000	17,000	21,000
Power input	Cooling	kW	0.036/0.036/0.036	0.040/0.040/0.040	0.042/0.042/0.042	0.049/0.049/0.049	0.064/0.064/0.064
	Heating	kW	0.026/0.026/0.026	0.030/0.030/0.030	0.032/0.032/0.032	0.039/0.039/0.039	0.054/0.054/0.054
Running current	Cooling	A	0.26/0.26/0.26	0.30/0.30/0.30	0.31/0.31/0.31	0.37/0.37/0.37	0.48/0.48/0.48
	Heating	A	0.23/0.23/0.23	0.27/0.27/0.27	0.28/0.28/0.28	0.34/0.34/0.34	0.45/0.45/0.45
Fan motor	Type		Sirocco fan	Sirocco fan	Sirocco fan	Sirocco fan	Sirocco fan
	Airflow rate (H/M/L)	m^3/min	480/420/360	510/450/390	540/480/420	630/570/480	750/690/600
	Motor output	kW	0.05	0.05	0.05	0.05	0.05
	External static pressure	Pa	10 (30)	15 (30)	15 (40)	15 (40)	15 (40)
Sound power level (L/M/H)		dB	40/42/43	42/44/45	43/45/47	45/47/49	48/50/52
Sound pressure level (L/M/H)		dB(A)	25/27/28 (27/29/30) 1	27/29/30 (29/31/32) 1	28/30/32 (30/32/34) 1	30/32/34 (32/34/36) 1	31/33/35 (32/35/37) 1
Dimensions	H x W x D	mm	200 x 750 x 640	200 x 750 x 640	200 x 750 x 640	200 x 750 x 640	200 x 750 x 640
Pipe connections	Liquid	inches (mm)	1/4 (Ø6.35)	1/4 (Ø6.35)	1/4 (Ø6.35)	1/4 (Ø6.35)	1/4 (Ø6.35)
	Gas	inches (mm)	1/2 (Ø12.7)	1/2 (Ø12.7)	1/2 (Ø12.7)	1/2 (Ø12.7)	1/2 (Ø12.7)
	Drain piping		VP-20	VP-20	VP-20	VP-20	VP-20
Net weight		kg	19	19	19	19	19

GLOBAL REMARKS

Rated conditions:	Cooling	Heating
Indoor air temperature	27ºC DB / 19ºC WB	20ºC DB
Outdoor air temperature	35ºC DB / 24ºC WB	7ºC DB / 6ºC WB

Specifications subject to change without notice.

TECHNICAL FOCUS

- ULTRA-SLIM PROFILE: 200 mm FOR ALL MODELS
- DC FAN MOTOR GREATLY REDUCES POWER CONSUMPTION
- IDEAL FOR HOTEL APPLICATION WITH VERY NARROW FALSE CEILINGS
- ANTI-MOULD WASHABLE FILTERS INCLUDED
- EASY MAINTENANCE AND SERVICE BY EXTERNAL ELECTRICAL BOX
- 40 PA STATIC PRESSURE ENABLES DUCTWORK TO BE FITTED.
- INCLUDES DRAIN PUMP

Ultra-slim profile for all models

Drain pump with increased power!

By adoption of a high-lift drain pump, the drain piping rise height can be increased to 785 mm from the lower surface of the body.

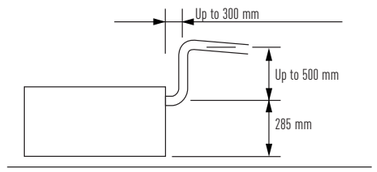

A class energy saving INVERTER

E1 TYPE HIGH STATIC PRESSURE DUCTED // CONCEALED DUCT HIGH-STATIC PRESSURE

The E1 range of ducted units offers improved design flexibility for extended duct layouts as a result of their increased external static pressures.

NEW 2011

environmentally friendly refrigerant R410A | easy maintenance SELF-DIAGNOSING | for more comfort AUTOMATIC FAN | perfect humidity control MILD DRY | practical operation AUTOMATIC RESTART

S-73ME1E5 / S-106ME1E5 / S-140ME1E5

S-224ME1E5 / S-280ME1E5

OPTIONAL CONTROLLER

Timer remote controller CZ-RTC2

Wireless remote controller CZ-RWSC2

Simplified remote controller CZ-RE2C2

MODEL NAME			S-73ME1E5	S-106ME1E5	S-140ME1E5	S-224ME1E5	S-280ME1E5
Power source			220/230/240 V, 1 phase - 50, 60 Hz				220/230/240 V, 1 phase - 50 Hz
Cooling capacity		kW	7.3	10.6	14.0	22.4	28.0
		BTU/h	25,000	36,000	47,800	76,400	95,500
Heating capacity		kW	8.0	11.4	16.0	25.0	31.5
		BTU/h	27,000	39,000	54,600	85,300	107,500
Power input	Cooling	kW	0.480/0.505/0.530	0.520/0.545/0.570	0.600/0.660/0.710	0.870/0.900/0.930	1.270/1.330/1.390
	Heating	kW	0.480/0.505/0.530	0.520/0.545/0.570	0.600/0.660/0.710	0.870/0.900/0.930	1.270/1.330/1.390
Running current	Cooling	A	2.29/2.30/2.31	2.46/2.46/2.47	2.80/2.90/3.00	4.05/4.06/4.07	6.04/6.06/6.07
	Heating	A	2.29/2.30/2.31	2.46/2.46/2.47	2.80/2.90/3.00	4.05/4.06/4.07	6.04/6.06/6.07
Fan	Type		Sirocco fan	Sirocco fan	Sirocco fan	Sirocco fan	Sirocco fan
	Air flow rate (H/M/L)	m^3/h	1,380/1,320/1,260	1,800/1,680/1,500	2,160/2,100/1,980	3,360/3,190/2,980	4,320/4,200/3,960
	Motor output	kW	0.2	0.2	0.35	0.2	0.4
	External static pressure	Pa	186	176	167	176	216 (235) [1]
Sound power level (L/M/H)		dB	53/54/55	53/55/56	55/57/58	57/58/59	60/61/62
Sound pressure level (L/M/H)		dB(A)	42/43/44	42/44/45	44/46/47	46/47/48	49/50/51 (50/51/52) 1
Dimensions	H x W x D	mm	420 x 1,065 x 620	420 x 1,065 x 620	450 x 1,065 x 620	467 x 1,428 x 1,230	467 x 1,428 x 1,230
Pipe connections	Liquid	inches (mm)	3/8 (Ø9.52)	3/8 (Ø9.52)	3/8 (Ø9.52)	3/8 (Ø9.52)	3/8 (Ø9.52)
	Gas	inches (mm)	5/8 (Ø15.88)	5/8 (Ø15.88)	5/8 (Ø15.88)	3/4 (Ø19.05)	7/8 (Ø22.22)
	Drain piping		VP-25	VP-25	VP-25	VP-25	VP-25
Net weight		kg	47	50	54	110	120

1 With booster cable.

GLOBAL REMARKS

Rated conditions:	Cooling	Heating
Indoor air temperature	27°C DB / 19°C WB	20°C DB
Outdoor air temperature	35°C DB / 24°C WB	7°C DB / 6°C WB

Specifications subject to change without notice.

TECHNICAL FOCUS

- COMPLETE FLEXIBILITY FOR DUCTWORK DESIGN
- CAN BE LOCATED INTO A WEATHERPROOF HOUSING FOR EXTERNAL SITING
- AIR OFF SENSOR AVOIDS COLD AIR DUMPING
- CONFIGURABLE AIR TEMPERATURE CONTROL

System example

An inspection port (450 x 450 mm or more) is required at the lower side of the indoor unit body (field supply).

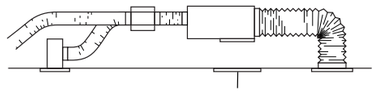

Inspection port (450 x 450 mm or more)

Rap valve kit CZ-P160RVK2

The types 224 and 280 require two rap valve kits for each unit. (not required on a 1:1 installation)

A class energy saving INVERTER

T1 TYPE CEILING // FLOOR/CEILING MOUNTED

The T1 type ceiling mounted unit feature a DC fan motor for increased efficiency and reduced operating sound levels. All the units are the same height and depth for a uniform appearance in mixed installations and feature a fresh air knockout for improved air quality.

NEW 2011

environmentally friendly refrigerant R410A | easy maintenance SELF-DIAGNOSING | for more comfort AUTOMATIC FAN | perfect humidity control MILD DRY | further comfort AUTO-FLAP CONTROL | practical operation AUTOMATIC RESTART | comfort everywhere AIR SWEEP

OPTIONAL CONTROLLER

Timer remote controller
CZ-RTC2

Wireless remote controller
CZ-RWST2
CZ-RWSC2

Simplified remote controller
CZ-RE2C2

MODEL NAME			S-36MT1E5	S-45MT1E5	S-56MT1E5	S-73MT1E5	S-106MT1E5	S-140MT1E5
Power source			220/230/240 V, 1 phase - 50, 60 Hz					
Cooling capacity		kW	3.6	4.5	5.6	7.3	10.6	14.0
		BTU/h	12,000	15,000	19,000	25,000	36,000	47,800
Heating capacity		kW	4.2	5.0	6.3	8.0	11.4	16.0
		BTU/h	14,000	17,000	21,000	27,000	39,000	54,600
Power input	Cooling	kW	0.028/0.029/0.029	0.028/0.029/0.029	0.031/0.032/0.032	0.043/0.043/0.044	0.073/0.074/0.075	0.085/0.086/0.088
	Heating	kW	0.028/0.029/0.029	0.028/0.028/0.029	0.031/0.031/0.032	0.042/0.042/0.043	0.072/0.073/0.074	0.084/0.085/0.086
Running current	Cooling	A	0.26/0.24/0.23	0.26/0.24/0.23	0.28/0.26/0.24	0.38/0.35/0.33	0.62/0.57/0.53	0.69/0.63/0.60
	Heating	A	0.26/0.24/0.23	0.26/0.24/0.23	0.28/0.26/0.25	0.38/0.35/0.34	0.62/0.57/0.55	0.69/0.63/0.62
Fan	Type		Sirocco fan	Sirocco fan	Sirocco fan	Sirocco fan	Sirocco fan	Sirocco fan
	Air flow rate (H/M/L)	m^3/h	720/600/540	780/660/540	780/660/540	1,110/900/840	1,650/1,380/1,200	1,800/1,560/1,320
	Motor output	kW	0.03	0.03	0.03	0.04	0.08	0.08
Sound power level (L/M/H)		dB	41/43/46	41/44/47	41/44/47	44/47/49	46/49/52	48/51/54
Sound pressure level (L/M/H)		dB(A)	30/32/35	30/33/36	30/33/36	33/36/38	35/38/41	37/40/43
Dimensions	H x W x D	mm	210 x 910 x 680	210 x 910 x 680	210 x 910 x 680	210 x 1,180 x 680	210 x 1,595 x 680	210 x 1,595 x 680
Pipe connections	Liquid	inches (mm)	1/4 (Ø6.35)	1/4 (Ø6.35)	1/4 (Ø6.35)	3/8 (Ø9.52)	3/8 (Ø9.52)	3/8 (Ø9.52)
	Gas	inches (mm)	1/2 (Ø12.7)	1/2 (Ø12.7)	1/2 (Ø12.7)	5/8 (Ø15.88)	5/8 (Ø15.88)	5/8 (Ø15.88)
	Drain piping		VP-20	VP-20	VP-20	VP-20	VP-20	VP-20
Net weight		kg	21	21	21	25	33	33

GLOBAL REMARKS

Rated conditions:	Cooling	Heating
Indoor air temperature	27°C DB / 19°C WB	20°C DB
Outdoor air temperature	35°C DB / 24°C WB	7°C DB / 6°C WB

Specifications subject to change without notice.

TECHNICAL FOCUS

- LOW SOUND LEVELS
- NEW DESIGN, ALL UNITS JUST 210 mm HIGH
- LARGE AND WIDE AIR DISTRIBUTION
- EASY TO INSTALL AND MAINTAIN
- FRESH AIR KNOCKOUT

Further comfort improvement

The wide air discharge opening widens the air flow to the left and the right, so that a comfortable temperature is obtained in the entire room. The unpleasant feeling caused when the air flow directly hits the human body is prevented by the "Draft prevention position", which changes the swing width, so that the degree of comfort is increased.

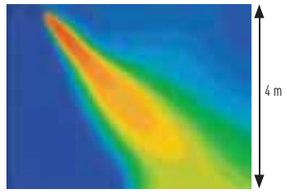

Further comfort improvement with airflow distribution

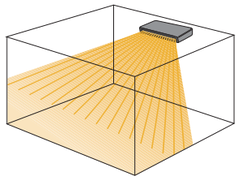

Air distribution is automatically altered depending on the operational mode of the unit

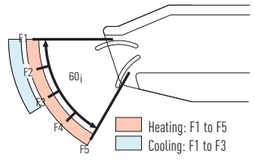

A class energy saving INVERTER

K1 TYPE // WALL MOUNTED

The K1 Type wall mounted unit has a stylish smooth panel which not only looks good but is also easy to clean. The unit is also smaller, lighter and substantially quieter than previous models making it ideal for small offices and other commercial applications.

NEW 2011

S-22MK1E5 / S-28MK1E5 / S-36MK1E5

S-45MK1E5 / S-56MK1E5 / S-73MK1E5 / S-106MK1E5

environmentally friendly refrigerant R410A | easy maintenance SELF-DIAGNOSING | for more comfort AUTOMATIC FAN | perfect humidity control MILD DRY | further comfort AUTO-FLAP CONTROL | practical operation AUTOMATIC RESTART | comfort everywhere AIR SWEEP

OPTIONAL CONTROLLER

Timer remote controller
CZ-RTC2

Wireless remote controller
CZ-RWSC2

Simplified remote controller
CZ-RE2C2

MODEL NAME			S-22MK1E5	S-28MK1E5	S-36MK1E5	S-45MK1E5	S-56MK1E5	S-73MK1E5	S-106MK1E5
Power source			220/230/240 V, 1 phase - 50, 60 Hz						
Cooling capacity		kW	2.20	2.80	3.60	4.5	5.6	7.3	10.6
		BTU/h	7,500	9,600	12,000	15,000	19,000	25,000	36,000
Heating capacity		kW	2.50	3.20	4.20	5.0	6.3	8.0	11.4
		BTU/h	8,500	11,000	14,000	17,000	21,000	27,000	39,000
Power input	Cooling	kW	0.018/0.019/0.019	0.018/0.019/0.019	0.021/0.022/0.023	0.020/0.020/0.021	0.029/0.030/0.030	0.056/0.057/0.057	0.059/0.060/0.060
	Heating	kW	0.019/0.019/0.020	0.019/0.019/0.020	0.022/0.023/0.023	0.020/0.020/0.021	0.029/0.030/0.030	0.056/0.057/0.057	0.067/0.068/0.068
Running current	Cooling	A	0.16/0.16/0.16	0.16/0.16/0.16	0.19/0.19/0.20	0.27/0.26/0.23	0.36/0.35/0.32	0.59/0.58/0.52	0.63/0.62/0.55
	Heating	A	0.17/0.17/0.18	0.17/0.17/0.18	0.20/0.20/0.20	0.27/0.26/0.23	0.36/0.35/0.32	0.59/0.58/0.52	0.70/0.70/0.62
Fan	Type		Sirocco fan	Sirocco fan	Sirocco fan	Sirocco fan	Sirocco fan	Sirocco fan	Sirocco fan
	Air flow rate (H/M/L)	m^3/h	540/450/360	540/450/360	600/510/390	720/630/510	840/720/630	1,080/870/690	1,140/990/780
	Motor output	kW	0.047	0.047	0.047	0.047	0.047	0.047	0.047
Sound power level (L/M/H)		dB	39/43/46	39/43/46	40/44/48	41/45/49	51/55/58	51/55/58	53/56/60
Sound pressure level (L/M/H)		dB(A)	28/32/35	28/32/35	29/33/37	30/34/38	32/36/40	40/44/47	42/45/49
Dimensions	H x W x D	mm	285 x 825 x 217	285 x 825 x 217	285 x 825 x 217	300 x 1,065 x 230	300 x 1,065 x 230	300 x 1,065 x 230	300 x 1,065 x 230
Pipe connections	Liquid	inches (mm)	1/4 (Ø6.35)	1/4 (Ø6.35)	1/4 (Ø6.35)	1/4 (Ø6.35)	1/4 (Ø6.35)	3/8 (Ø9.52)	3/8 (Ø9.52)
	Gas	inches (mm)	1/2 (Ø12.7)	1/2 (Ø12.7)	1/2 (Ø12.7)	1/2 (Ø12.7)	1/2 (Ø12.7)	5/8 (Ø15.88)	5/8 (Ø15.88)
	Drain piping		VP-13	VP-13	VP-13	VP-13	VP-13	VP-13	VP-13
Net weight		kg	10	10	10	13	13	14.5	14.5

GLOBAL REMARKS

Rated conditions:	Cooling	Heating
Indoor air temperature	27ºC DB / 19ºC WB	20ºC DB
Outdoor air temperature	35ºC DB / 24ºC WB	7ºC DB / 6ºC WB

Specifications subject to change without notice.

TECHNICAL FOCUS

- CLOSED DISCHARGE PORT
- LIGHTER AND SMALLER UNITS MAKE THE INSTALLATION EASY
- QUIET OPERATION
- SMOOTH AND DURABLE DESIGN
- PIPING OUTLET IN THREE DIRECTIONS
- WASHABLE FRONT PANEL
- AIR DISTRIBUTION IS AUTOMATICALLY ALTERED DEPENDING ON THE OPERATIONAL MODE OF THE UNIT
- ANTI-MOULD FILTERS ARE STANDARD

EXTERNAL VALVE (OPTIONAL)

CZ-P56SVK2
(model sizes 22 to 56)
CZ-P160SVK2
(model sizes 73 to 106)

Closed discharge port

When the unit is turned off, the flap closes completely to prevent entry of dust into the unit and to keep the equipment clean.

Lighter and smaller units make the installation easy

The width has been decreased by 17% and the units are lighter.

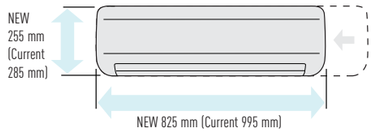

Quiet operation

These units are among the quietest in the industry, making them ideal for hotels and hospitals.

Smooth and durable design

The smooth cover means these units match most modern interiors. Their compact size enables them to blend in, even in small spaces.

Piping outlet in three directions

Piping outlet is possible in the three directions of rear, right, and left, making the installation work easier.

Washable front panel

The indoor unit's front panel can be easily removed and washed for trouble-free cleaning.

Air distribution is automatically altered depending on the operational mode of the unit

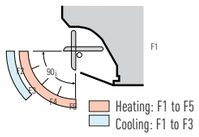

A class energy saving INVERTER

P1 TYPE // FLOOR STANDING

The compact floor standing P1 units are the ideal solution for providing perimeter air conditioning. The standard wired controller can be incorporated into the body of the unit.

NEW 2011

environmentally friendly refrigerant R410A | easy maintenance SELF-DIAGNOSING | for more comfort AUTOMATIC FAN | perfect humidity control MILD DRY | practical operation AUTOMATIC RESTART

OPTIONAL CONTROLLER

Timer remote controller
CZ-RTC2

Wireless remote controller
CZ-RWSC2

Simplified remote controller
CZ-RE2C2

MODEL NAME			S-22MP1E5	S-28MP1E5	S-36MP1E5	S-45MP1E5	S-56MP1E5	S-71MP1E5
Power source			220/230/240 V, 1 phase - 50, 60 Hz					
Cooling capacity		kW	2.2	2.8	3.6	4.5	5.6	7.1
		BTU/h	7,500	9,600	12,000	15,000	19,000	24,000
Heating capacity		kW	2.5	3.2	4.2	5.0	6.3	8.0
		BTU/h	8,500	11,000	14,000	17,000	21,000	27,000
Power input	Cooling	kW	0.051/0.056/0.061	0.051/0.056/0.061	0.079/0.085/0.091	0.116/0.126/0.136	0.116/0.126/0.136	0.150/0.160/0.170
	Heating	kW	0.036/0.040/0.045	0.036/0.040/0.045	0.064/0.070/0.076	0.079/0.091/0.101	0.079/0.091/0.101	0.110/0.120/0.130
Running current	Cooling	A	0.24/0.25/0.26	0.24/0.25/0.26	0.37/0.38/0.39	0.54/0.56/0.58	0.54/0.56/0.58	0.70/0.72/0.73
	Heating	A	0.17/0.18/0.19	0.17/0.18/0.19	0.30/0.31/0.32	0.37/0.41/0.43	0.37/0.41/0.43	0.52/0.54/0.56
Fan	Type		Sirocco fan	Sirocco fan	Sirocco fan	Sirocco fan	Sirocco fan	Sirocco fan
	Air flow rate (H/M/L)	m^3/h	420/360/300	420/360/300	540/420/360	720/540/480	900/780/660	1,020/840/720
	Motor output	kW	0.01	0.01	0.02	0.02	0.03	0.06
Sound power level (L/M/H)		dB	39/41/44	39/41/44	40/46/50	42/46/49	42/47/50	46/49/52
Sound pressure level (L/M/H)		dB(A)	28/30/33	28/30/33	29/35/39	31/35/38	31/36/39	35/38/41
Dimensions	H x W x D	mm	615 x 1,065 x 230	615 x 1,065 x 230	615 x 1,065 x 230	615 x 1,380 x 230	615 x 1,380 x 230	615 x 1,380 x 230
Pipe connections	Liquid	inches (mm)	1/4 (Ø6.35)	1/4 (Ø6.35)	1/4 (Ø6.35)	1/4 (Ø6.35)	1/4 (Ø6.35)	3/8 (Ø9.52)
	Gas	inches (mm)	1/2 (Ø12.7)	1/2 (Ø12.7)	1/2 (Ø12.7)	1/2 (Ø12.7)	1/2 (Ø12.7)	5/8 (Ø15.88)
	Drain piping		VP-20	VP-20	VP-20	VP-20	VP-20	VP-20
Net weight		kg	29	29	29	39	39	39

GLOBAL REMARKS

Rated conditions:	Cooling	Heating
Indoor air temperature	27°C DB / 19°C WB	20°C DB
Outdoor air temperature	35°C DB / 24°C WB	7°C DB / 6°C WB

Specifications subject to change without notice.

TECHNICAL FOCUS

- PIPES CAN BE CONNECTED TO EITHER SIDE OF THE UNIT FROM THE BOTTOM OR REAR
- EASY TO INSTALL
- FRONT PANEL OPENS FULLY FOR EASY MAINTENANCE
- REMOVABLE AIR DISCHARGE GRILLE GIVES FLEXIBLE AIR FLOW
- ROOM FOR CONDENSATE PUMP

Effective perimeter handling

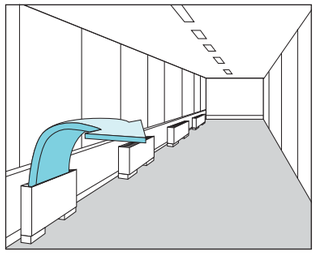

A standard wired remote control can be installed in the body

A class energy saving INVERTER

R1 TYPE // CONCEALED FLOOR STANDING

At just 229 mm deep, the R1 unit can be easily concealed in perimeter areas to provide powerful and effective air conditioning.

NEW 2011

environmentally friendly refrigerant R410A | easy maintenance SELF-DIAGNOSING | for more comfort AUTOMATIC FAN | perfect humidity control MILD DRY | practical operation AUTOMATIC RESTART

OPTIONAL CONTROLLER

Timer remote controller
CZ-RTC2

Wireless remote controller
CZ-RWSC2

Simplified remote controller
CZ-RE2C2

MODEL NAME			S-22MR1E5	S-28MR1E5	S-36MR1E5	S-45MR1E5	S-56MR1E5	S-71MR1E5
Power source			220/230/240 V, 1 phase - 50, 60 Hz					
Cooling capacity		kW	2.2	2.8	3.6	4.5	5.6	7.1
		BTU/h	7,500	9,600	12,000	15,000	19,000	24,000
Heating capacity		kW	2.5	3.2	4.2	5.0	6.3	8.0
		BTU/h	8,500	11,000	14,000	17,000	21,000	27,000
Power input	Cooling	kW	0.051/0.056/0.061	0.051/0.056/0.061	0.079/0.085/0.091	0.116/0.126/0.136	0.116/0.126/0.136	0.150/0.160/0.170
	Heating	kW	0.036/0.040/0.045	0.036/0.040/0.045	0.064/0.070/0.076	0.079/0.091/0.101	0.079/0.091/0.101	0.110/0.120/0.130
Running current	Cooling	A	0.24/0.25/0.26	0.24/0.25/0.26	0.37/0.38/0.39	0.54/0.56/0.58	0.54/0.56/0.58	0.70/0.72/0.73
	Heating	A	0.17/0.18/0.19	0.17/0.18/0.19	0.30/0.31/0.32	0.37/0.41/0.43	0.37/0.41/0.43	0.52/0.54/0.56
Fan	Type		Sirocco fan	Sirocco fan	Sirocco fan	Sirocco fan	Sirocco fan	Sirocco fan
	Air flow rate (H/M/L)	m^3/h	420/360/300	420/360/300	540/420/360	720/540/480	900/780/660	1,020/840/720
	Motor output	kW	0.01	0.01	0.02	0.02	0.03	0.06
Sound power level (L/M/H)		dB	39/41/44	39/41/44	40/46/50	42/46/49	42/46/49	46/49/52
Sound pressure level (L/M/H)		dB(A)	28/30/33	28/30/33	29/35/39	31/35/38	31/36/39	35/38/41
Dimensions	H x W x D	mm	616 x 904 x 229	616 x 904 x 229	616 x 904 x 229	616 x 1,219 x 229	616 x 1,219 x 229	616 x 1,219 x 229
Pipe connections	Liquid	inches (mm)	1/4 (Ø6.35)	1/4 (Ø6.35)	1/4 (Ø6.35)	1/4 (Ø6.35)	1/4 (Ø6.35)	3/8 (Ø9.52)
	Gas	inches (mm)	1/2 (Ø12.7)	1/2 (Ø12.7)	1/2 (Ø12.7)	1/2 (Ø12.7)	1/2 (Ø12.7)	5/8 (Ø15.88)
	Drain piping		VP-20	VP-20	VP-20	VP-20	VP-20	VP-20
Net weight		kg	21	21	21	28	28	28

GLOBAL REMARKS

Rated conditions:	Cooling	Heating
Indoor air temperature	27ºC DB / 19ºC WB	20ºC DB
Outdoor air temperature	35ºC DB / 24ºC WB	7ºC DB / 6ºC WB

Specifications subject to change without notice.

TECHNICAL FOCUS

- CHASSIS UNIT FOR DISCRETE INSTALLATION
- COMPLETE WITH REMOVABLE FILTERS
- PIPES CAN BE CONNECTED TO EITHER SIDE OF THE UNIT FROM THE BOTTOM OR REAR
- EASY TO INSTALL

Perimeter air conditioning with high interior quality

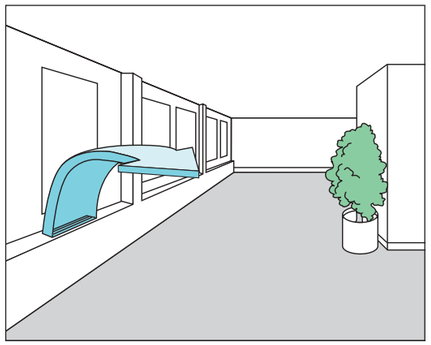

NEW 2011

SYSTEM CONTROLS FOR VRF

A WIDE VARIETY OF CONTROL OPTIONS TO MEET THE REQUIREMENTS OF DIFFERENT APPLICATIONS.

OPERATION SYSTEM	INDIVIDUAL CONTROL SYSTEMS			TIMER OPERATION	CENTRALIZED CONTROL SYSTEMS			
Requirements	Normal operation	Operation from each seat	Quick and easy operation	Daily and weekly program	Operation with various function from center station	Only ON/OFF operation from center station	Simplified load distribution ratio (LDR) for each tenant	
							Touch screen panel	Personal computer (field supply)
External appearance								
Type, model name	Timer Remote Controller (Wired)	Wireless Remote Controller	Simplified Remote Controller	Schedule Timer	System Controller	ON/OFF Controller	Intelligent Controller	Communication adaptor
	CZ-RTC2	CZ-RWSU2 CZ-RWSC2 CZ-RWSY2 CZ-RWST2 CZ-RWSL2 CZ-RWSK2	CZ-RE2C2	CZ-ESWC2	CZ-64ESMC2	CZ-ANC2	CZ-256ESMC2	CZ-CFUNC2
Number of indoor units which can be controlled	1 group, 8 units	1 group, 8 units	1 group, 8 units	64 groups, max. 64 units	64 groups, max. 64 units	16 groups, max. 64 units	64 units x 4 systems, max. 256 units	2 systems, max. 128 units
Use limitations	• Up to 2 controllers can be connected per group.	• Up to 2 controllers can be connected per group.	• Up to 2 controllers can be connected per group.	• Required power supply from the system controller • When there is no system controller, connection is possible to the T10 terminal of an indoor unit.	• Up to 10 controllers, can be connected to one system. • Main unit/sub unit (1 main unit + 1 sub unit) connection is possible. • Use without remote controller is possible.	• Up to 8 controllers (4 main units + 4 sub units) can be connected to one system. • Use without remote controller is impossible.	• A communication adaptor (CZ-CFUNC2) must be installed for three or more systems.	
Functions								
ON/OFF	✘	✘	✘	—	✘	✘	✘	✘
Mode setting	✘	✘	✘	—	✘	—	✘	✘
Fan speed setting	✘	✘	✘	—	✘	—	✘	✘
Temperature setting	✘	✘	✘	—	✘	—	✘	✘
Air flow direction	✘[1]	✘[1]	✘[1]	—	✘	—	✘	✘
Permit/Prohibit switching	—	—	—	—	✘[1]	✘	✘[1]	✘[1]
Weekly program	✘	—	—	✘	—	—	✘	✘
Load distribution ration	—	—	—	—	—	—	✘	✘

1. Setting is not possible when a remote control unit is present. (Use the remote control for setting.)
All specifications subject to change without notice.

INDIVIDUAL CONTROL SYSTEMS

CONTROL CONTENTS	PART NAME, MODEL NO.	QUANTITY
Standard Control · Control of the various operations of the indoor unit by wired or wireless remote controller. · Cooling or heating mode of the outdoor unit is decided by the first priority of the remote controller. · Switching between remote controller sensor and body sensor is possible.	Timer remote controller **CZ-RTC2** Wireless remote controller **CZ-RWSY2** **CZ-RWSU2** **CZ-RWSL2** **CZ-RWSG2** **CZ-RWSK2** **CZ-RE2C2**	1 unit each
(1) Group control · Batch remote control on all indoor units. · Operation of all indoor cells in the same mode. · Up to 8 units can be connected.	Timer remote controller **CZ-RTC2** **CZ-RE2C2**	1 unit
(2) Main/sub remote control · Max 2 remote controllers per indoor unit. · The button pressed last has priority. · Timer setting is possible even with the sub remote controller.	Main or sub Timer remote controller **CZ-RTC2** Wireless remote controller **CZ-RWSY2** **CZ-RWSU2** **CZ-RWSL2** **CZ-RWSG2** **CZ-RWSK2** **CZ-RE2C2**	As required

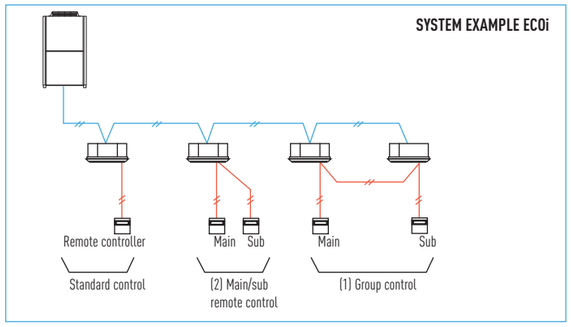

Timer remote controller (CZ-RTC2)

Dimensions
H 120 x W 120 x D 16 mm

Basic remote controller ON/OFF
· Operation mode changeover (Cooling, Heating, Dry, Auto, Fan).
· Temperature setting (Cooling/Dry: 18-30 deg Heating: 16-30 deg).
· Fan speed setting H/ M/ L and Auto.
· Air flow direction adjustment.

Time Function 24 hours real time clock
· Day of the week indicator.

Weekly Programme Function
· A maximum of 6 actions can be programmed for each day.

Outing Function
· This function can prevent the room temperature from dropping or rising when the occupants are out for a long time.

Sleeping Function
· This function controls the room temperature for comfortable sleeping.

Max. 8 indoor units can be controlled from one remote controller

Remote control by main remote controller and sub controller is possible

Max. 2 remote controllers (main remote controller and sub controller) can be installed for one indoor unit.

Wireless remote controller

Y1 TYPE
CZ-RWSY2

U1 TYPE
CZ-RWSU2

L1 TYPE
CZ-RWSL2

WIRELESS REMOTE CONTROL FOR ALL INDOOR UNITS
CZ-RWSC2

K1 TYPE
CZ-RWSK2

D1 AND T1 TYPE
CZ-RWST2

Easy installation for the 4-way cassette type simply by replacing the corner part

24 hour timer function

Remote control by main remote controller and sub controller is possible
· Max. 2 remote controllers (main remote controller and sub controller) can be installed for one indoor unit.

When CZ-RWSC2 is used, wireless control becomes possible for all indoor units
· When a separate receiver is set up in a different room, control from that room also becomes possible.
· Automatic operation by means of the emergency operation button is possible even when the remote controller has been lost or the batteries have been exhausted.

Operation of separate energy recovery ventilators
When commercial ventilation fans or heat-exchange ventilation fans have been installed, they can be operated with this remote control (interlocked operation with the indoor unit or independent ventilation ON/OFF).

Simplified remote controller (CZ-RE2C2)

Dimensions
H 120 x W 70 x D 16 mm

A remote controller with simple functions and basic operation
· Suitable for open rooms or hotels where detailed functions are not required.
· ON/OFF, operation mode switching, temperature setting, wind velocity switching, wind direction setting, alarm display, and remote controller self-diagnosis can be performed.
· Batch group control for up to 8 indoor units.
· Remote control by main remote controller and sub controller is possible with a simplified remote controller or a wired remote controller (up to two units).

Remote sensor (CZ-CSRC2)

· This remote sensor can be connected to any indoor unit. Please use it to detect the room temperature when no remote controller sensor or body sensor is used. (connection to a system without a remote controller is possible).
· For joint use with a remote control switch, use the remote control switch as main remote controller.

CENTRALISED CONTROL SYSTEMS

Schedule timer (CZ-ESWC2)

Dimensions
H 120 x W 120 x D 16 mm

The power supply for the schedule timer is taken from one of the following.
1. Control circuit board (T10) of a nearby indoor unit (power supply wiring length: within 200m from the indoor unit).
2. System controller (power supply wiring length: within 100 m from the indoor unit).

When the power supply for the schedule timer is taken from the control circuit board of the indoor unit, that indoor unit cannot be used with other control devices using the T10 terminal.
As operation mode and temperature settings are not possible with the schedule timer, it must be used together with a remote controller, a system controller, an intelligent controller, etc. Also, as it does not have an address setting function, the control function of a system controller etc. must be used for address setting.

Up to 64 groups (max. 64 indoor units) can be controlled divided into 8 timer groups

Six program operations (Operation/Stop/Local permission/ Local prohibition) per day can be set in a program for one week
- Only operation or stop, remote controller local permission or remote controller local prohibition, and their respective combinations are possible. (Operation + local permission, stop + local prohibition, only local permission, etc.)
- Local prohibition and the combination of the three items of temperature setting, mode change, and operation/stop can be set at the time of installation.

A function for pausing the timer in case of national holidays has been added, and timer operation also can be stopped for a long time
- By setting holidays or operation stop within one week, the timer can be paused just for that week.
- All timer settings can be stopped with the timer "ON/OFF effective" button. (Return to timer operation is made by pressing the button again.)

CONNECTION EXAMPLE 1
(POWER SUPPLY FROM THE INDOOR UNIT)

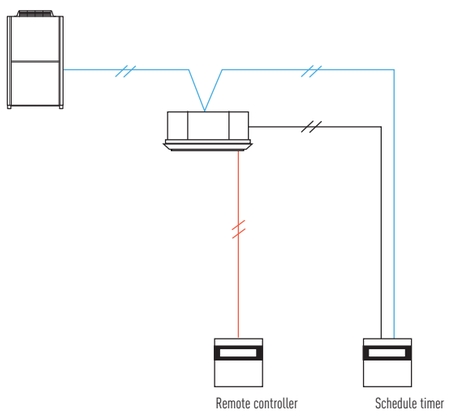

CONNECTION EXAMPLE 2
(POWER SUPPLY FROM THE CENTRAL CONTROLLER)

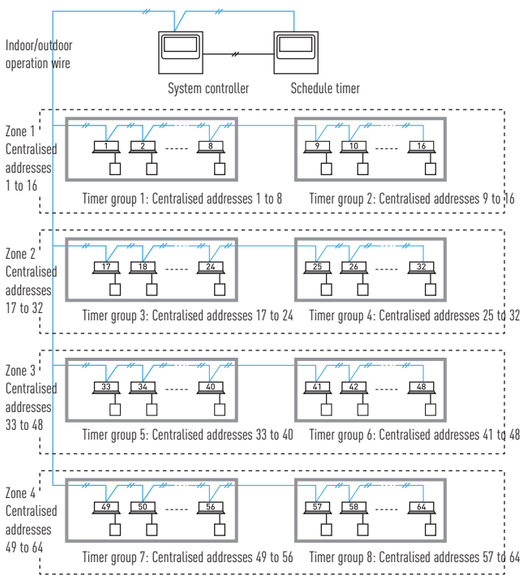

ON/OFF controller (CZ-ANC2)

Dimensions
H 121 x W 122 x D 14 + 52
(embedding dimension mm)

Power supply: AC 220 to 240 V
I/O part: Remote input (effective voltage: within DC 240 V): All ON/OFF
Remote output (allowable voltage: within DC 30 V): All ON, All alarm

- 16 groups of indoor units can be controlled.
- Collective control and individual group (unit) control can also be performed.
- Up to 8 ON/OFF controller (4 main, 4 sub) can be installed in one link system.
- The operation status can be determined immediately.

Note: As operation mode and temperature settings are not possible with the ON/OFF controller, it must be used together with a remote controller, a system controller etc.

Web Interface Device (CZ-CWEBC2)

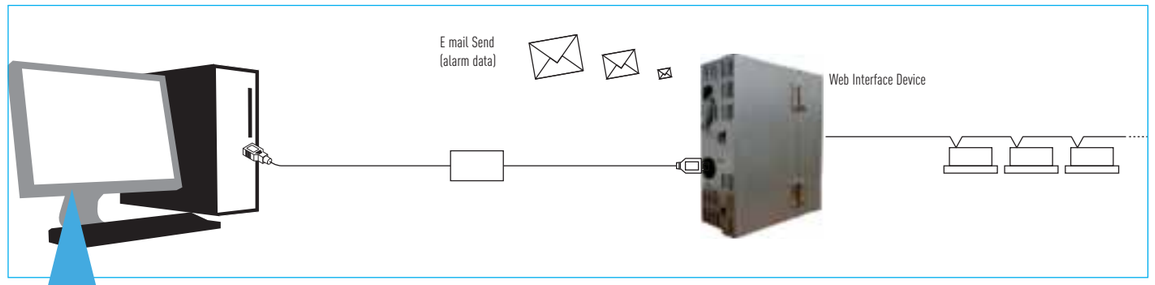

Functions
- Access and operation by Web browser.
- Icon display.
- Language codes available in English, French, German, Italian, Portuguese, Spanish.
- Individual control possible (max. 64 indoor units) ON/OFF operation mode, set temperature, fan speed, Flap set, timer on/off alarm code monitoring, prohibit Remote Control.
- Each Tenant (Zone) control.
- All Units control.
- Alarm Log.
- Mail Sent Log.
- Program Timer set 50 daily timers with 50 actions each day, 50 weekly timers 50 weekly timers, 1 holiday timer, 5 special day timers, for each tenant.
- Prohibit Remote Control set.
- IP ADDRESS could be changed via Internet.

Note: it is recommended to install a remote controller or a system controller on site to enable local control if IT network experiance a problem.

CENTRALISED CONTROL SYSTEMS

System controller (CZ-64ESMC2)

Dimensions
160 x W 160 x D 21 + 69
(embedding dimension mm)

Power supply: AC 220 to 240 V
I/O part: Remote input (effective voltage: DC 24 V): All ON/All OFF
Remote output (voltage-free contact): All ON/All OFF (external Power supply within DC 30 V, max 1 A)
Total wiring length 1 km

Individual control is possible for max. 64 groups, 64 indoor units.
Control of 64 indoor units divided into 4 zones. (One zone can have up to 16 groups, and one group can have up to 8 units.)
Control is possible for ON/OFF, operation mode, fan speed, air flow direction (only when used without a remote controller), operation monitoring, alarm monitoring, ventilation, remote controller local operation prohibition, etc.

Individual All operations are possible also from the remote controller. However, the contents will be changed to the contents of the controller operated last.
Central 1 The remote controller cannot be used for ON/OFF. (All other operations are possible from the remote controller.)
Central 3 The remote controller cannot be used for mode change or temperature setting change. (All other operations are possible from the remote controller.)
Central 4 The remote controller cannot be used for operation mode change. (All other operations are possible from the remote controller.)

Joint use with a remote controller, an intelligent controller, a schedule timer, etc. is possible
(The maximum number of connectable system controllers is 10, including other central controllers on the same circuit.)
(In case of joint use with a wireless remote controller, there are limitations for the control mode. Please use only with "Individual" and "Central 1".)

Control of systems without a remote controller and of main/sub systems (a total of up to 2 units) is possible

A control mode corresponding to the use condition can be selected from 10 patterns

A Operation mode: Central control mode or remote control mode can be selected
Central control mode: The system controller is used as centralised control device. (Setting from a remote controller can be prohibited by prohibiting local operation from the system controller.)
Remote control mode: The system controller is used as a remote controller. (Setting from the system controller can be prohibited by prohibiting local operation from another central control unit.)

B Controlled unit number mode: All mode or zone 1, 2, 3, 4 mode can be selected
All mode: All, zone, or group unit can be selected.
Zone 1, 2, 3, 4 mode: Setting is possible only for the indoor units of zone 1, 2, 3, or 4.

CONNECTION EXAMPLE

		A Operation mode	
		Central control mode	**Remote control mode**
B Controlled unit number mode	**All mode**	All central control Example 1	All remote control
	Zone 1 mode	Zone 1 central control Example 2	Zone 1 remote control
	Zone 2 mode	Zone 2 central control	Zone 2 remote control Example 3
	Zone 3 mode	Zone 3 central control Example 4	Zone 3 remote control
	Zone 4 mode	Zone 4 central control	Zone 4 remote control Example 5

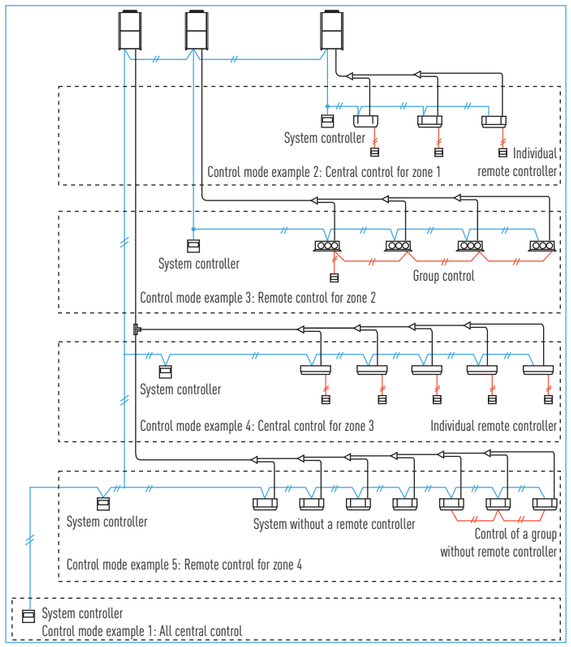

Intelligent controller (CZ-256ESMC2)

Touch panel

Dimensions
H 240 x W 280 x D 138 mm
Power supply AC 100 to 240 V (50 Hz), 20 W (separate power supply)
I/O part Remote in put (voltage-free contact): All ON/OFF
Remote output (voltage-free contact): All ON, All alarm (external power supply within DC 30 V, 0.5 A)
Total wiring length: 1 km for each system
Only for embedding in the panel

Limitation contents for prohibited operation
Prohibition means limitation of the operation contents from the remote controller. It is also possible to change the prohibition items.

Limitation contents (Limitations can be user defined)
Individual There is no limitation for the operation of the remote controller. However, the contents will be changed to the contents of the controller operated last. (Last-pressed priority.)
Prohibition 1 The remote controller cannot be used for ON/OFF. (All other operations are possible from the remote controller.)
Prohibition 2 The remote controller cannot be used for ON/OFF, operation mode change and temperature setting. (All other operations are possible from the remote controller.)
Prohibition 3 The remote controller cannot be used for operation mode change and temperature setting. (All other operations are possible from the remote controller.)
Prohibition 4 The remote controller cannot be used for operation mode change. (All other operations are possible from the remote controller.)

Note: Avoid joint use of the AMY system and the intelligent controller on the same indoor/ outdoor operation line.

Max. 256 indoor units (4 systems x 64 units) can be controlled. In case of three or more systems, a communication adapter CZ-CFUNC2 must be installed on the outside

Operation is possible as batch, in zone units, in tenant and in group units

ON/OFF, operation mode setting, temperature setting, for fan speed setting, air flow direction setting (when used without a remote controller), and remote controller local operation prohibition (prohibition 1, 2, 3, 4) can be done

A system without a remote controller is possible. Joint use with a remote controller or a system controller is also possible

Use of a schedule timer and holiday setting also can be done

Proportional distribution of the air conditioning energy is possible. Including csv-file export via CF-card (supplementary accessory)

NEW function: Pulse signal input from electric/gas consumption meter

In case of joint use with a wireless remote control system, there are limitations for the control mode. Please use only with "Permission" and "Prohibition 1".

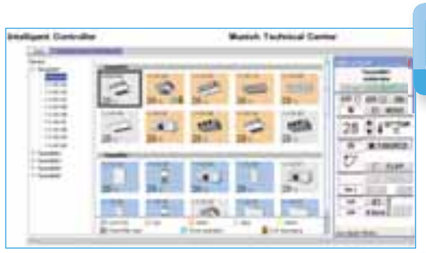

Web application

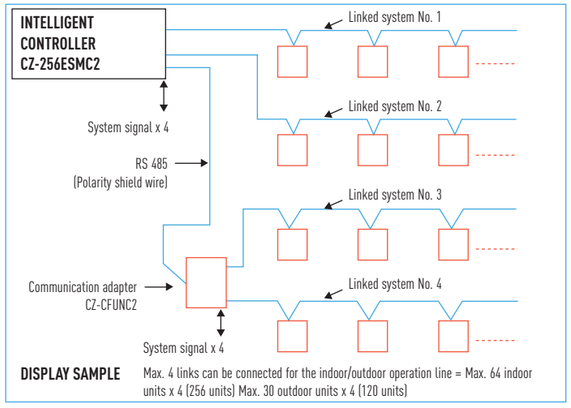

Communication adaptor (CZ-CFUNC2)

Required to connect three or more linked wiring systems (indoor/ outdoor operation lines) to the intelligent controller

Also required for connection of P-AIMS

Two linked wiring systems can be connected to one CZ-CFUNC2, but max. 4 systems can be connected for the entire intelligent controllers

* As this is not a splash-proof design, it must be installed indoors or in the control panel, etc.

WEB INTERFACE SYSTEMS

Web Interface / CZ-CWEBC2

(HxWxD): 248x185x80 mm
AC 100 to 240 V (50/60Hz), 17 W
(separate power supply)

Functions

- Access and operation by Web browser.
- Icon display.
- Language codes available in English, French, German, Italian, Portguese, Spanish.
- Individual control possible (max. 64 indoor units) ON/OFF operation mode, set temperature, fan speed, Flap set, timer on/off alarm code monitoring, prohibit Remote Control.
- Zone control*.
- All Units control.
- Alarm Log.
- Mail Sent Log.
- Program Timer set 50 daily timers with 50 actions each day, 50 weekly timers 50 weekly timers, 1 holiday timer, 5 special day timers, for each tenant
- Prohibit Remote Control set.
- IP ADDRESS could be changed via Internet.

Note: It is recommended to install a remote controller or a system controller on site to enable local control if it network experience a problem.

Easy to set to every room by recognizable icon and user-friendly remote control window

- If any of the indoor units is selected, the remote control window shown will be displayed for detailed setting modifications.

Easy to manage and monitor each tenant use*

- Each floor or tenant, otherwise each zone can be displayed and controlled.
- All unit statuses can also be displayed on one screen.

Program Timer set

- 50 daily timers with 50 actions each day, 50 weekly timers, holiday timer, 5 special day timers, for each tenant.

* Web interface system not applicable for load distribution.

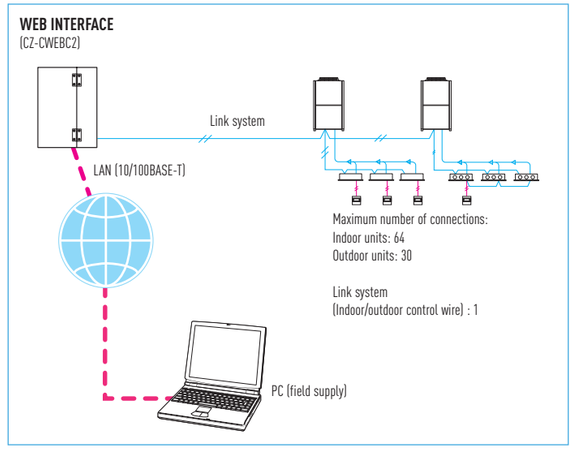

LonWorks Interface CZ-CLNC2

Functions

- This interface is a communications converter for connecting LonWorks to the control network of ECOi
- From the host connected to LonWorks, basic settings and status monitoring is possible for up to 16 groups of A/C units

Functions

A/C unit settings from the LonWorks communicator	Settings for each group of indoor units	Start/stop
		Temp. setting
		Operation mode
		Option 1 settings*
		Option 2 settings*
	Settings for all units	Emergency stop
A/C unit status notifications made to the LonWorks communicator		Start/stop
		Temp setting
		Operation mode
		Option 1 settings*
		Option 2 settings*
		Alarm status
		Indoor units with active alarms
		Room temp.
		A/C unit status
Configuration properties		Transmission intervals settings
		Minimum time secured for transmission

* Select two of the following: remote controller prohibit, fan speed setting, air direction setting, filter sign reset.

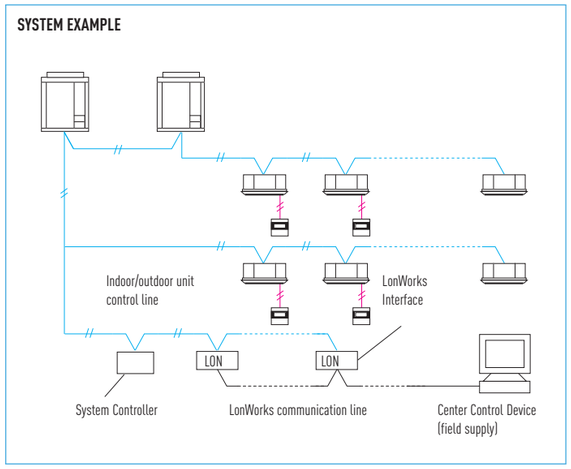

P-AIMS

PANASONIC TOTAL AIR CONDITIONING MANAGEMENT SYSTEM

P-AIMS Basic software / CZ-CSWKC2

~ Up to 1024 indoor units can be controlled by one PC ~

Functions of basic software

- Standard remote control for all indoor units.
- Many timer schedule programs can be set on the calender.
- Detailed information display for alarms.
- CSV file output with alarm history, operating status.
- Automatic data backup to HDD.

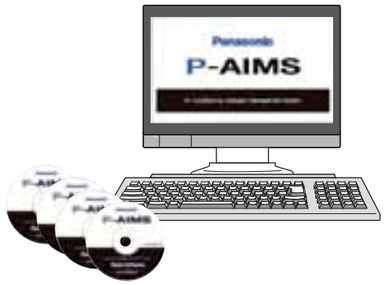

With 4 upgrade packages the basic software can be upgraded to suit individual requirements

P-AIMS is suitable for large shopping centers and universities with many areas/ buildings. 1 "P-AIMS" PC can have 4 independent systems at once. Each system can have max. 8 C/A units, and control max. 512 units. In total, 1024 indoor units can be controlled by 1 "P-AIMS" PC.

PC Environment:
XP Professional
CPU: Pentium 2.8 GHz or over
Memory: 2 GB or over
HDD: 100 GB or over

- Wiring length (PC~C/A) Max. 1 km
- Max. 8 C/A for 1 system
- Wiring length for each link from C/A Max. 1 km

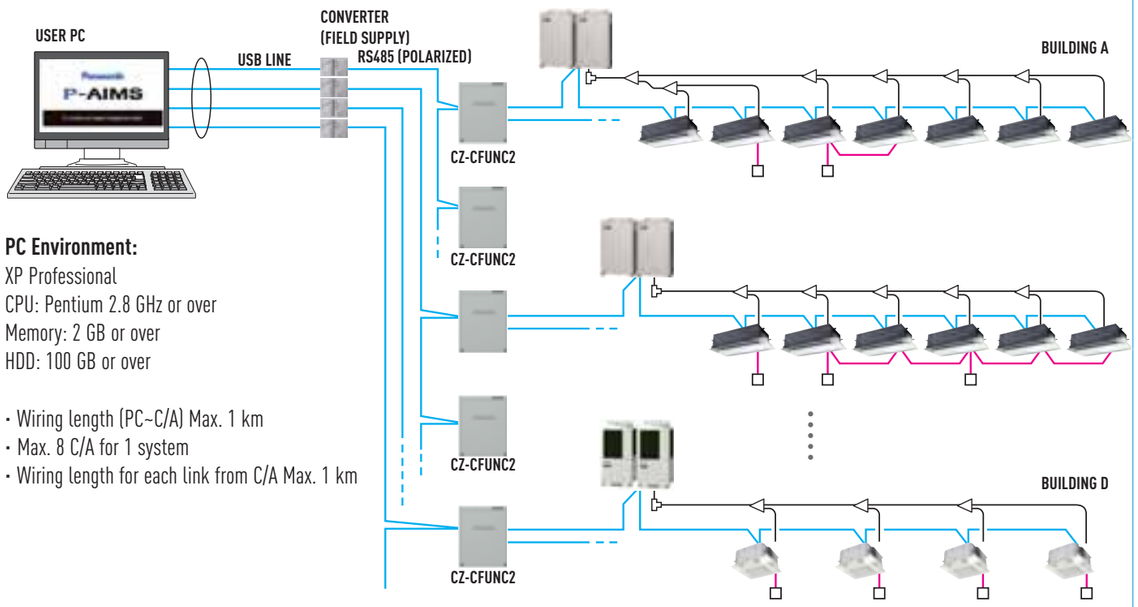

P-AIMS optional software CZ-CSWAC2 for Load distribution

Load distribution calculation for each tenant

- Air-conditioner load distribution ratio is calculated for each unit (tenant) with used energy consumption data (m^3, kWh).
- Calculated data is stored with CSV type file.
- Data of last 365 days is stored.

P-AIMS optional software CZ-CSWWC2 for Web application

Web access & control from remote station

- Accessing P-AIMS software from remote PC.
- You can monitor/operate ECOi system by using Web browser (Internet Explorer).

P-AIMS optional software CZ-CSWGC2 for Object layout display

Whole system can be controlled visually

- Operating status monitor is available on the layout display.
- Object's layout and indoor unit's location can be checked at once.
- Each unit can be controlled by virtual remote controller on the display.
- Max. 4 layout screens are shown at once.

P-AIMS optional software CZ-CSWBC2 for BACnet software interface

Connectable to BMS system

- Can communicate with other equipment by BACnet protocol.
- ECOi system can be controlled by both BMS and P-AIMS.
- Max. 255 indoor units can be connected to 1 PC (that has P-AIMS basic & BACnet software).

INTERFACES FOR EXTERNAL CONTROL

Seri-Para I /O unit for outdoor unit (CZ-CAPDC2)

Dimensions	H 80 x W 290 x D 260 mm
Power supply	Single phase 100/200 V (50/60 Hz), 18 W
Input	Batch operation/Batch stop (non-voltage contact/DC 24 V, pulse signal). Cooling/Heating (non-voltage contact/static signal). Demand 1/2 (non-voltage contact/static signal) (Local stop by switching)
Output	Operation output (non-voltage contact). Alarm output (non-voltage contact)
Wiring length	Indoor/Outdoor operation lines: Total length 1 km. Digital signal: 100 m or shorter

- This unit can control up to 4 outdoor units.
- From the centre control device, mode changing and batch operation/batch stop are possible.
- Required for demand control.

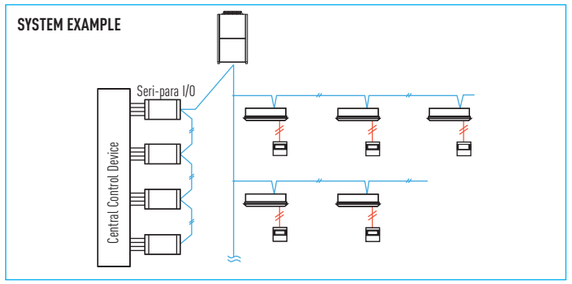

Local adaptor for ON/OFF control (CZ-CAPC2)

- Control and status monitoring is possible for individual indoor unit (or any external electrical device up to 250 V AC, 10 A) by contact signal.

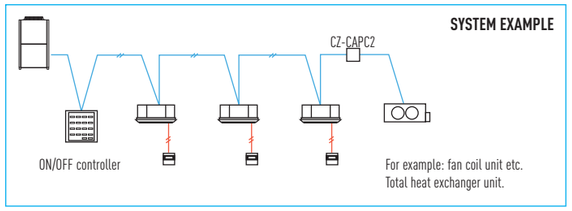

MINI Seri-Para I/O Unit (CZ-CAPBC2)

- Control and status monitoring is possible for individual indoor unit (1 group).
- In addition to operation and stop, there is a digital input function for air speed and operation mode.
- Temperature setting and measuring of the indoor suction temperature can be performed from central monitoring.
- The analog input for temperature setting is 0 to 10 V, or 0 to 140 Ohm.

- Power is supplied from the T10 terminal of the indoor units.
- Separate power supply also is possible (in case of suction temperature measuring).

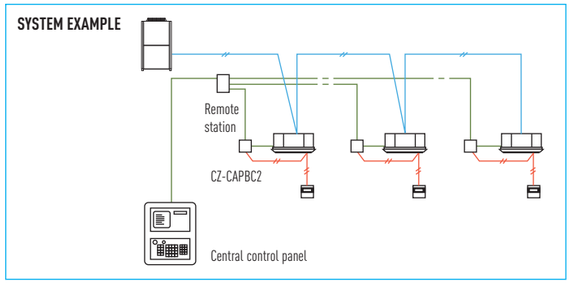

Example of BMS connection for air conditioner central control system

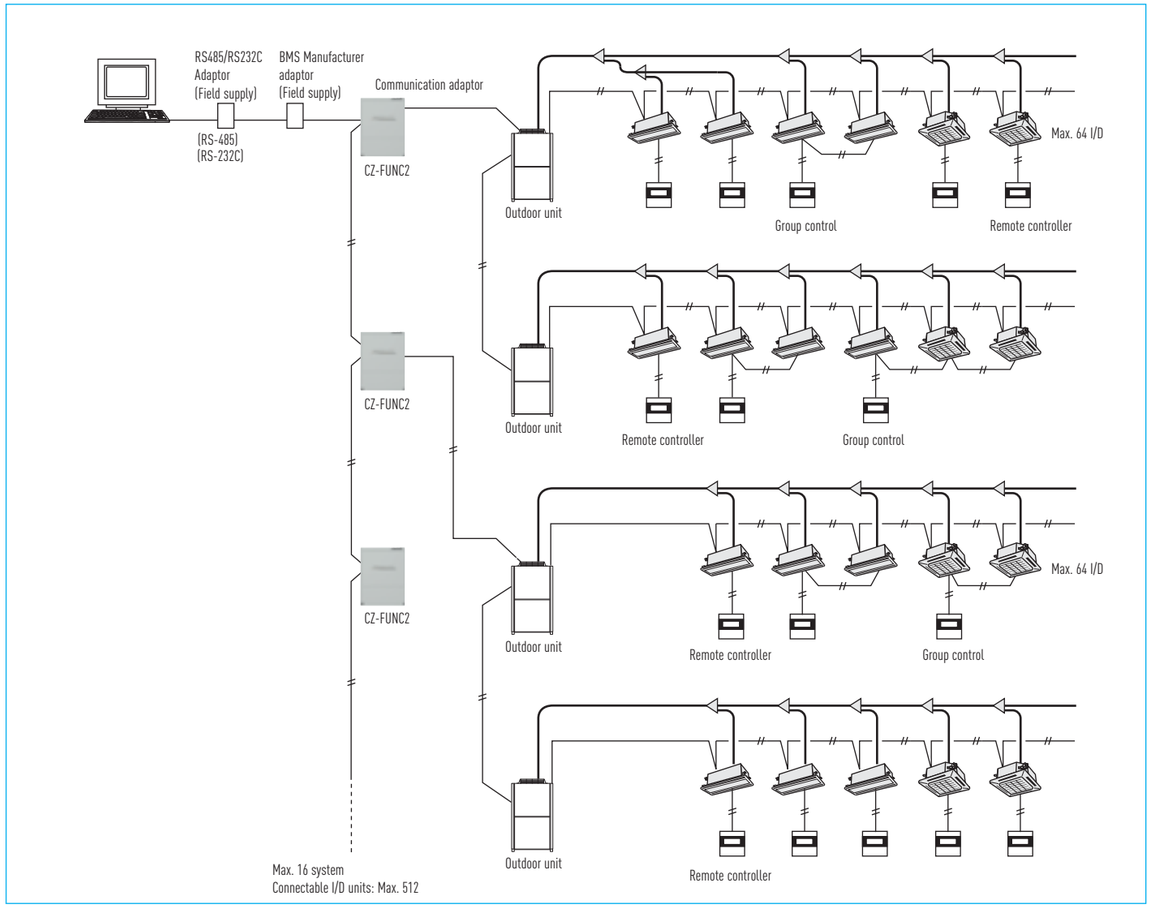

A/C unit settings	Unit ON/OFF
	Mode-change
	Room temperature setting
	Fan speed setting
	Flap setting
	Central control setting
	Filter-sign clear
	Alarm reset
A/C unit status	Unit ON/OFF status
	Operation mode
	Setting temperature
	Fan speed status
	Flap status
	Central control setting
	Filter-sign situation
	Correct/incorrect status
	Alarm code

PANASONIC VRF DESIGNER: NEW SOFTWARE FOR EASY VRF CALCULATION

Panasonic VRF Designer

System designing for VRF (ECOi and FS Multi) has never been easier

Panasonic has identified the importance of ever-increasing demands for fast and accurate responses to customer requests in our industry. More and more emphasis is being placed upon energy-efficiency in our marketplace. The ability to calculate cooling/heating loads and produce information of actual design conditions is a major advantage to any architect, consultant, contractor or end user.

Panasonic understands the ever-changing and demanding industry we are in and we are pleased to announce the launch of the next generation of our system design software program. The advanced Panasonic VRF Designer system design software has been customised to make any selection and design process as quick and easy as possible.

The design package utilises system wizards and import tools to enable both simple and complex systems to be created. In addition, the system will allow outdoor and indoor units to be dragged and dropped on an interactive desktop. This allows users to create everything from realistic floor plans with detailed piping and wiring schematics to send out with quotations, through to installation guidance drawings.

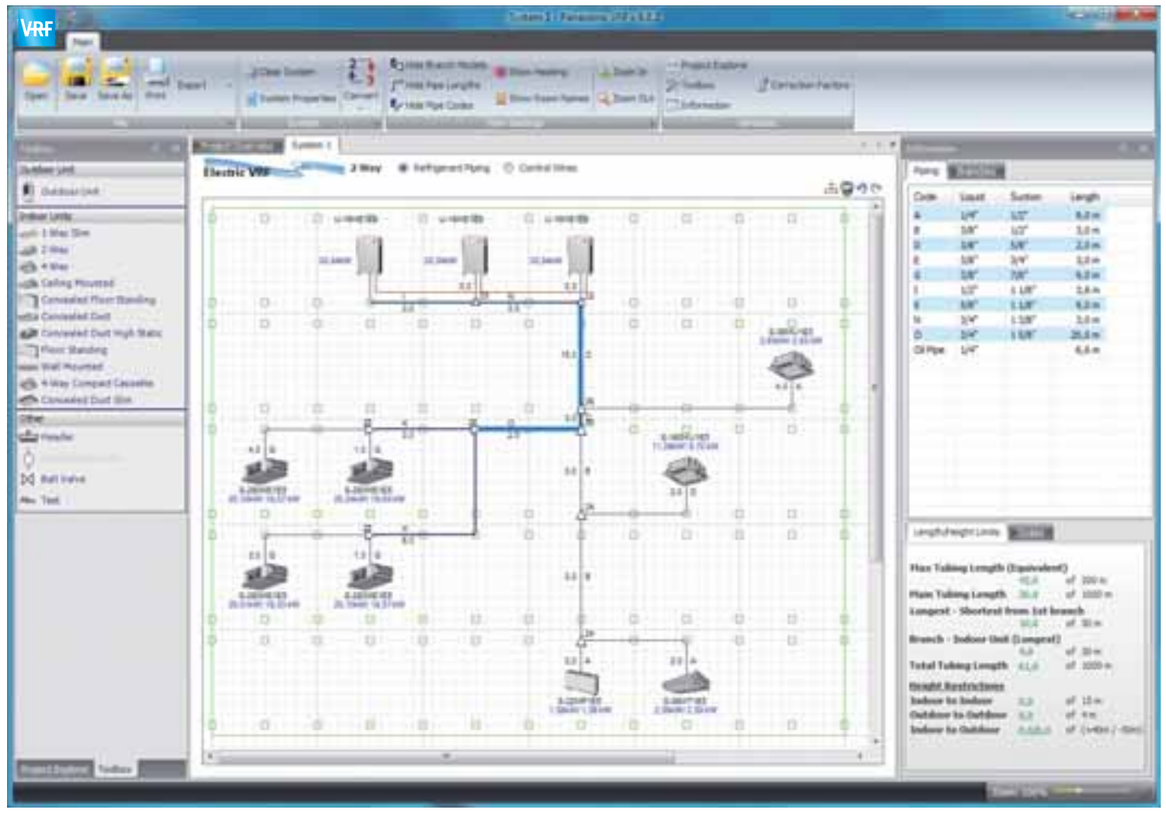

The Panasonic VRF Designer system software can be used for all Panasonic ECOi and FS Multi.

The Panasonic VRF Designer system software can be used for all Panasonic ECOi and FS Multi

Features include

- Easy to use system wizards.
- Auto piping and wiring features.
- Converted duties for conditions and pipework.
- Auto CAD (DXF), Excel and PDF export.
- Detailed wiring and pipework diagram.

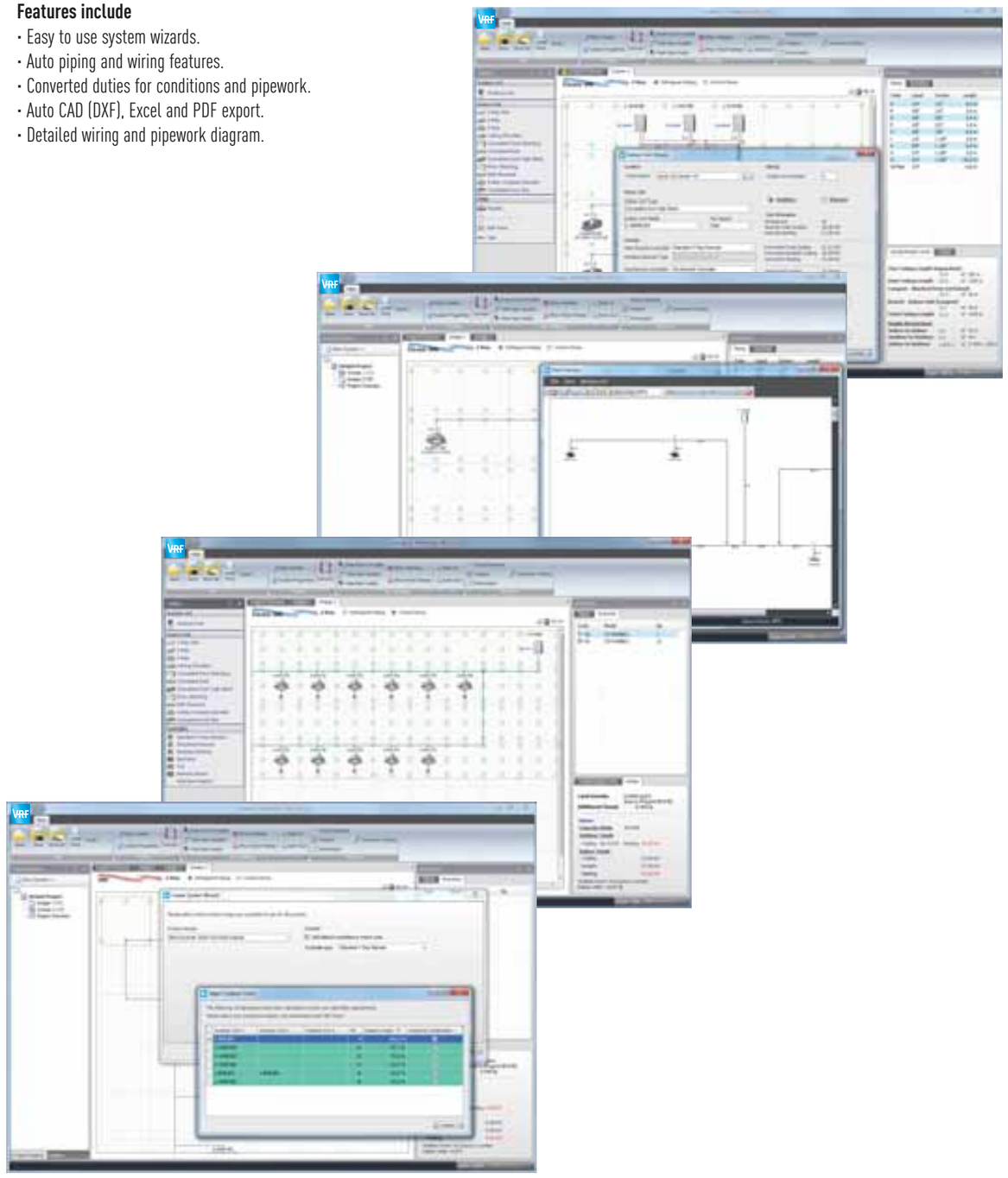

NEW 2011

RENEWAL R22

WHY RENEWAL?

AN IMPORTANT DRIVE TO FURTHER REDUCE THE POTENTIAL DAMAGE TO OUR OZONE

It is often said that legislation is ruling our lives but sometimes it is there to help save lives. R22 phase out can be described as one of these and starting from Jan 1st 2010 the use of Virgin (new) R22 refrigerant is banned within the European Community.

Panasonic are doing our part

We at Panasonic are also doing our part – recognising that all finances are under pressure at the moment., Panasonic have developed a clean and cost effective solution to enable this latest legislation to be introduced with as minimum an effect on businesses and cash reserves as possible.

The Panasonic renewal system allows good quality existing R22 pipe work to be re-used whilst installing new high efficiency R410A systems.

By bringing a simple solution to the problem Panasonic can renew all Split Systems and VRF systems; and depending upon certain restrictions we don't even limit the manufactures equipment we are replacing.

By installing a new high efficiency Panasonic R410A system you can benefit from around 30% running cost saving compared to the R22 system.
The installation can also qualify for the government's ECA (Enhanced Capital Allowance Scheme) which enables you to offset the cost against your Capital Gains Tax.

Yes...
1. Check the capacity of the system you wish to replace
2. Select from the Panasonic range the best system to replace it with
3. Follow the procedure detailed in the brochure and technical data
Simple...

R22 - The reduction of Chlorine critical for a cleaner future

VRF RENEWAL

Panasonic's Renewal system allows a completely new VRF system, indoor and outdoor units, to be installed using the existing systems pipe work. Panasonic's advanced technology enables the system to work with previously installed pipe work by managing the working pressure within the system down to R22 (33 bar) levels, this ensures the system works safely and efficiently without loss of capacity.
The new equipment can offer increased COP/EER by using state of the art inverter compressor and heat exchanger technology.
Having contacted your Panasonic supplier regarding pipe work restrictions and gained approval to use the Panasonic Renewal System there are three main tests that have to be carried out to ensure that the system can be used effectively.
Firstly a thorough inspection of the pipe work must be carried out and any damage must be repaired.
Secondly an oil test has to be carried out to ensure that the system has not been subject to a compressor burnout during its lifetime, Lastly a VRF Renewal Kit (CZ-SLK2) has to be installed within the pipe work to ensure that the system is cleaned of any remnants of oil.

VRF Renewal Kit (CZ-SLK2) and Sight Glass

The following shows an overview of the VRF Renewal Kit (CZ-SLK2) that is required when existing tubing is reused. If the exact tube length and tube size of the existing tubing are uncertain, attach a sight glass in accordance with the figure below. It will be used for checking the amount of additional refrigerant charge.

VRF RENEWAL KIT: CZ-SLK2

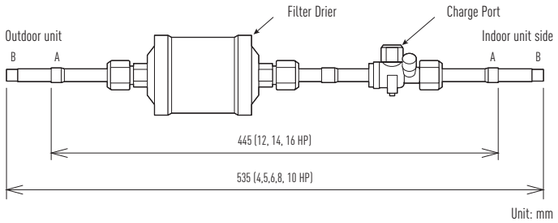

Connecting tube dimensions (Inch mm)

A Ø 1/2 (12.7) (12, 14, 16 HP)
B Ø 3/8 (9.52) (4,5,6,8 10 HP)

Note: If the tube size does not match that of the existing tubing, use a reducer (field supply) to adjust the tube diameter.

Sight glass (field supply)

If the exact tube length and tube size of the existing tubing are uncertain, attach a sight glass to the liquid tubing, and use it to check whether there is an appropriate amount of additional refrigerant charge.

Attaching the Filter Drier Kit and sight glass

- To adjust the limited pressure level into 3.3 MPa, special setting is necessary at site.
- A filter Drier shall be attached to the liquid tubing of each outdoor unit.
- High-Pressure switches shall be attached to both the liquid and the gas tubings of each outdoor unit.
- There is no need to remove the Filter Drier Kit after a test run is performed because normal operation continues while it is attached.
- When attaching the Filter Drier Kit, care shall be taken with reguards to the installation location and orientation of the filter drier and ball valve. If a mistake is made, the refrigerant is the system needs to be recovered when the filter drier is replaced, which will make maintenance difficult.
- Thermal insulation material (field supply: heat resistance of 80ºC or higher and thickness of 10 mm or greater) shall be applied to the Filter Drier Kit.
- The filter drier of the Filter Drier Kit may need to be replaced depending on the condition of the existing unit. Use a Danfoss DMB 164 as the replacement filter drier (field supply).

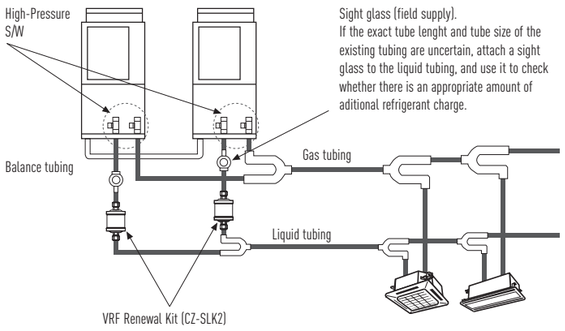

PROCEDURE FOR VRF RENEWAL

Judgment 1	Is the existing pipe work reusable?
Judgment 2	Is the pipe work length and the installation height difference of the existing pipe work within the tolerance ranges of the new system?
Judgment 3	Is the existing pipe work within the ranges of reusable tube size?
Judgment 4	Is the additional refrigerant charge at or below the upper limit?
Judgment 5	Is there a problem with dirt inside the existing pipe work?

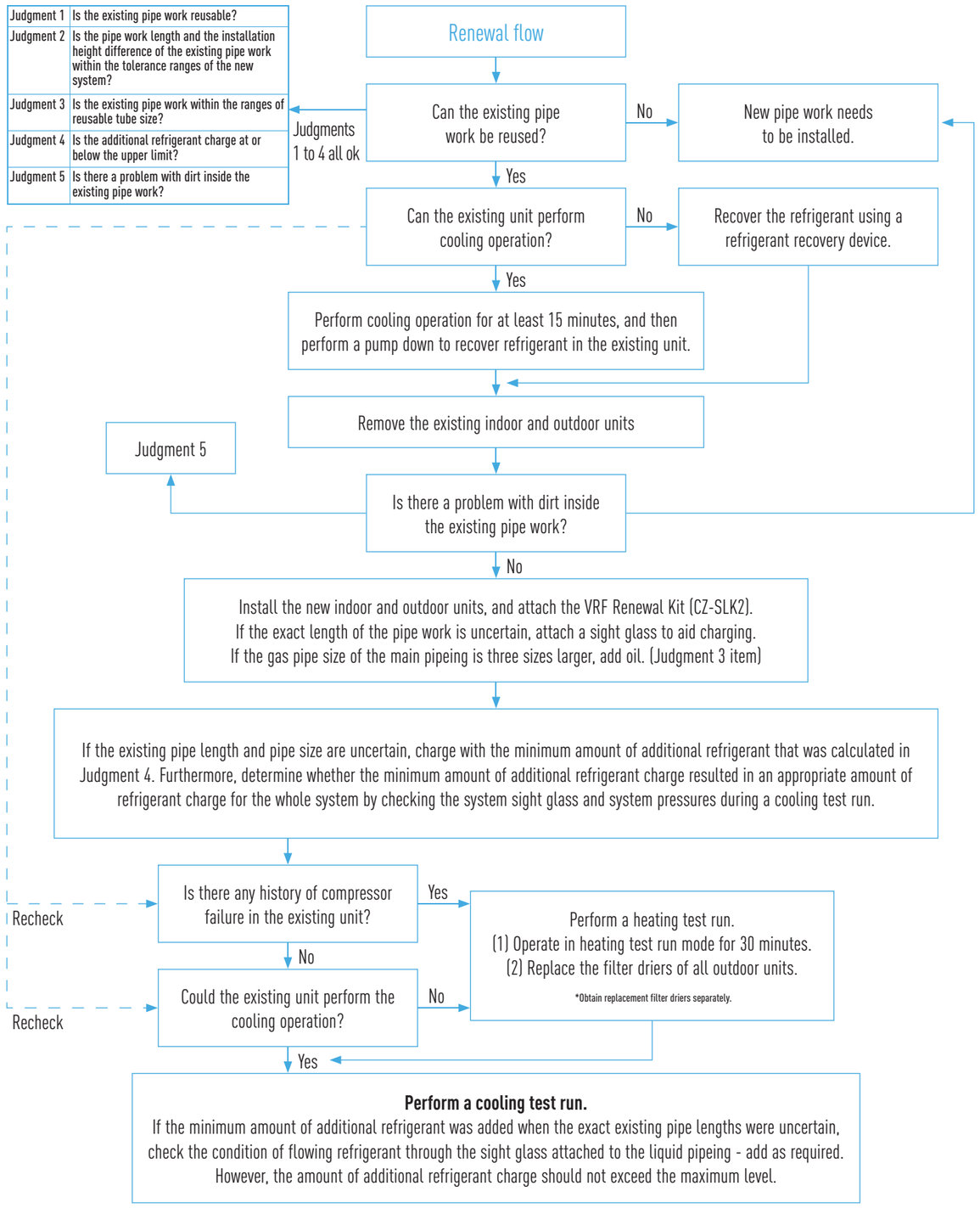

BRANCHES AND HEADERS

Dimensions and Tube Sizes of Branches and Headers for 2 Tubes ECOi Systems (ME1)

Optional Distribution Joint Kits

See the installation instructions packaged with the distribution joint kit for the installation procedure.

	COOLING CAPACITY AFTER DISTRIBUTION	REMARKS
Outdoor unit side	68.0 kW or less	CZ-P680PH2BM
	From 68.0 kW to 168.0 kW	CZ-P1350PH2BM
Indoor unit side	22.4 kW or less	CZ-P224BK2BM
	From 22.4 kW to 68.0 kW	CZ-P680BK2BM
	From 68.0 kW 168.0 kW or less	CZ-P1350BK2BM

Tubing size (with thermal insulation)

1. CZ-P680PH2BM

For outdoor unit side (Capacity after distribution joint is 68.0 kW or less.)

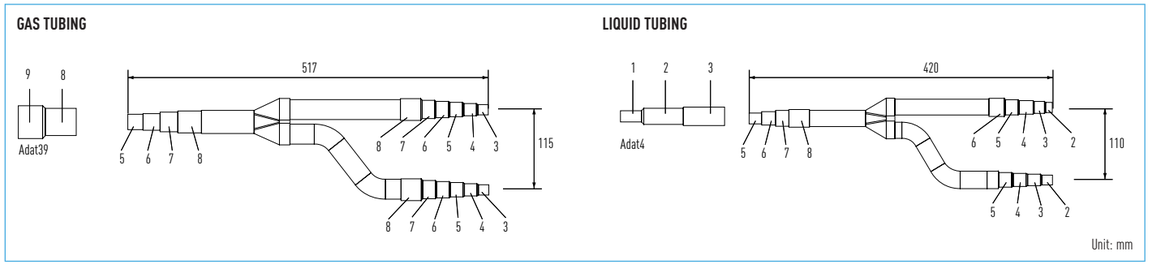

2. CZ-P1350PH2BM

For outdoor unit side (Capacity after distribution joint is greater than 68.0 kW and no more than 168.0 kW.)

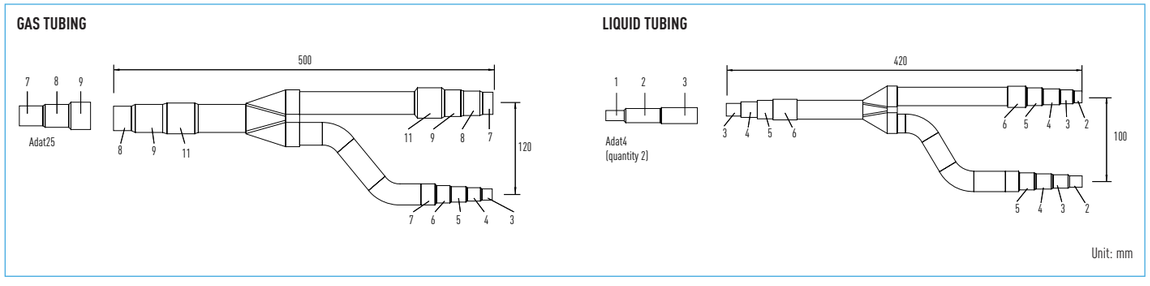

3. CZ-P224BK2BM

For indoor unit side (Capacity after distribution joint is 22.4 kW or less.)

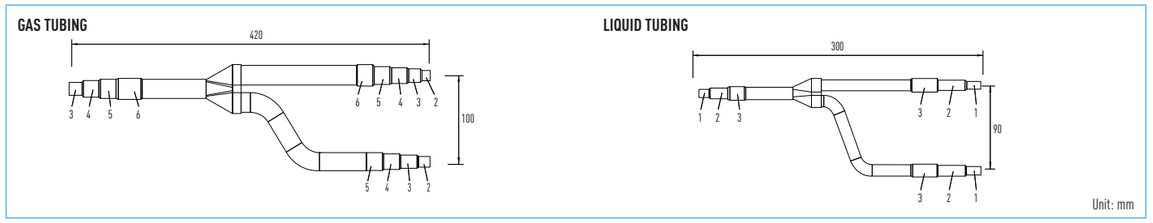

4. CZ-P680BK2BM

For indoor unit side (Capacity after distribution joint is greater than 22.4 kW and no more than 68.0 kW.)

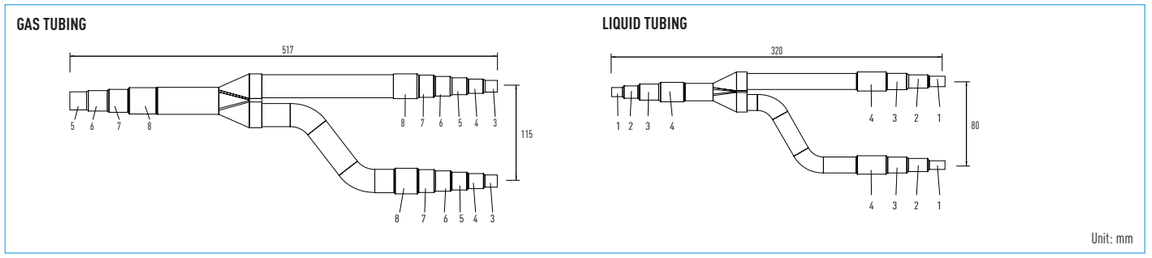

5. CZ-P1350BK2BM

For indoor unit side (Capacity after distribution joint is greater than 68.0 kW and no more than 168.0 kW.)

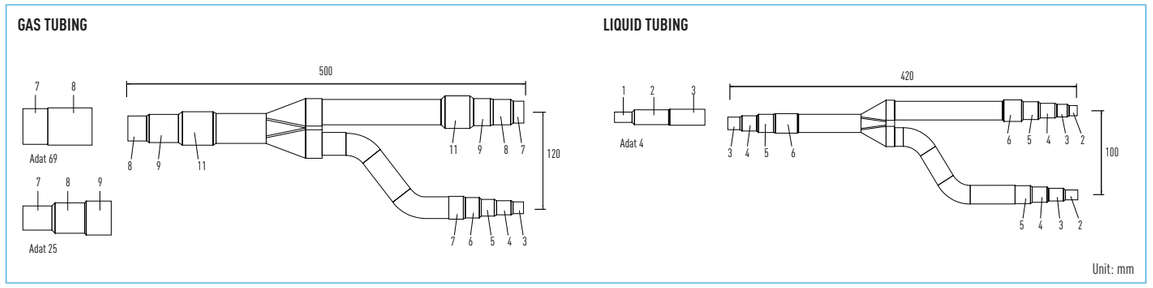

DIAMETERS								
1	6,35 mm	1/4"	6	22,40 mm	7/8"	11	38,10 mm	1"1/2
2	9,52 mm	3/8"	7	25,40 mm	1"	12	41,28 mm	1"5/8
3	12,70 mm	1/2"	8	28,57 mm	1" 1/8	13	44,45 mm	1"3/4
4	15,88 mm	5/8"	9	31,75 mm	1" 1/4	14	50,80 mm	2"
5	19,05 mm	3/4"	10	34,92 mm	1"3/8			

BRANCHES AND HEADERS

Dimensions and Tube Sizes of Branches and Headers for 3 Tubes ECOi Systems (MF1)

Optional Distribution Joint Kits

See the installation instructions packaged with the distribution joint kit for the installation procedure.

MODEL NAME	CAPACITY AFTER DISTRIBUTION JOINT	REMARKS
For outdoor unit	68.0 kW or less	CZ-P680PJ2BM
	greater than 68.0 kW and no more than 135.0 kW	CZ-P1350PJ2BM
For indoor unit	22.4 kW or less	CZ-P224BH2BM
	greater than 22.4 kW and no more than 68.0 kW	CZ-P680BH2BM
	greater than 68.0 kW and no more than 135.0 kW	CZ-P1350BH2BM

1. CZ-P680PJ2BM

For outdoor unit side (Capacity after distribution joint is 68.0 kW or less.)

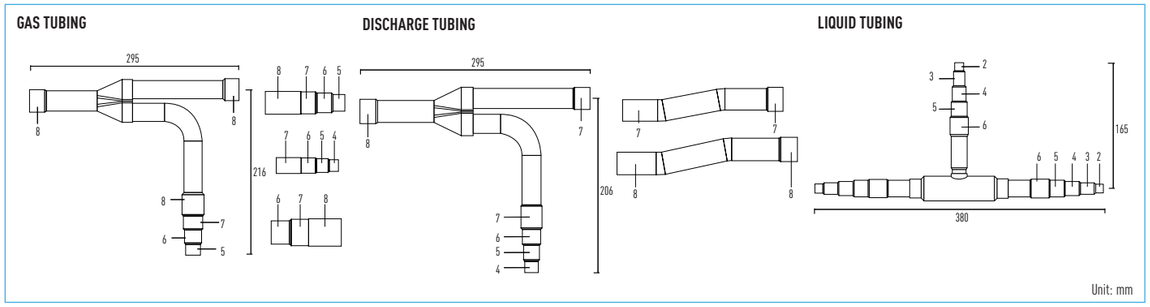

2. CZ-P1350PJ2BM

For outdoor unit side (Capacity after distribution joint is greater than 68.0 kW and no more than 135.0 kW.)

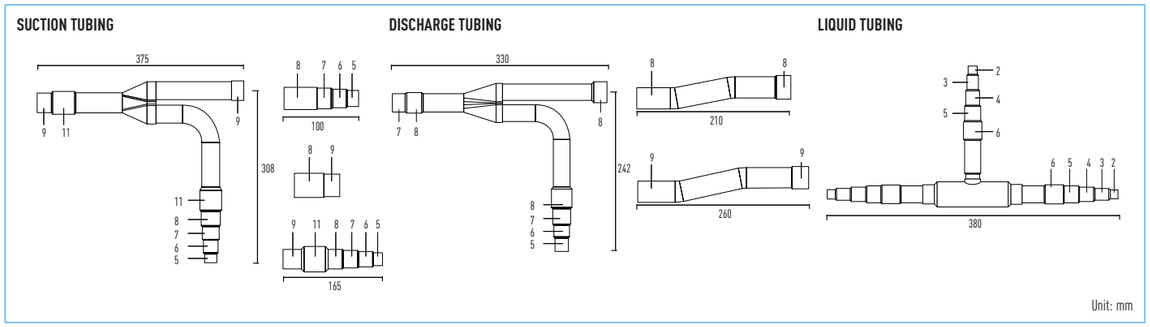

3. CZ-P224BH2BM.

For outdoor unit side (Capacity after distribution joint is 22.4 kW or less.)

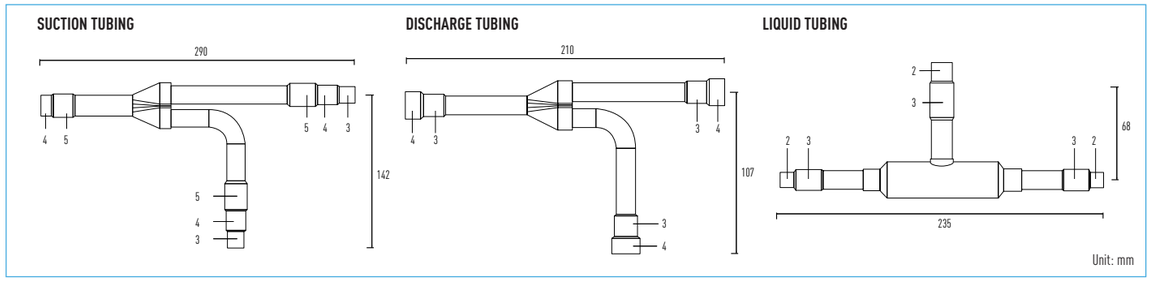

4. CZ-P680BH2BM.

For outdoor unit side (Capacity after distribution joint is greater than 22.4 kW and no more than 68.0 kW.)

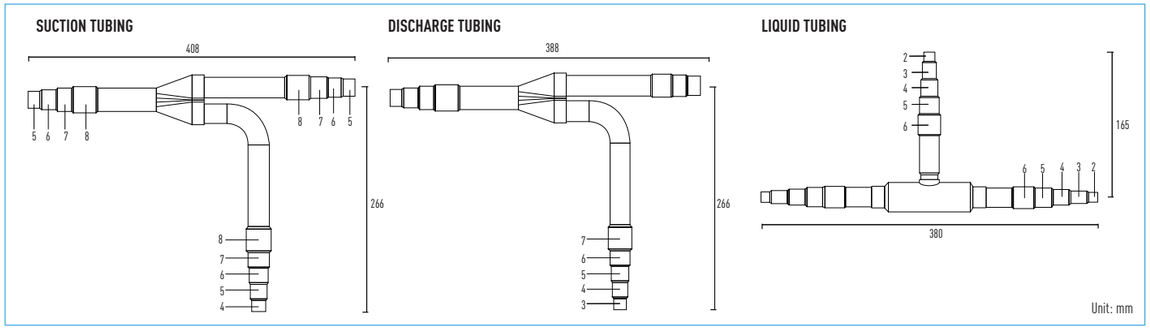

5. CZ-P1350BH2BM.

For outdoor unit side (Capacity after distribution joint is greater than 68.0 kW and no more than 135.0 kW.)

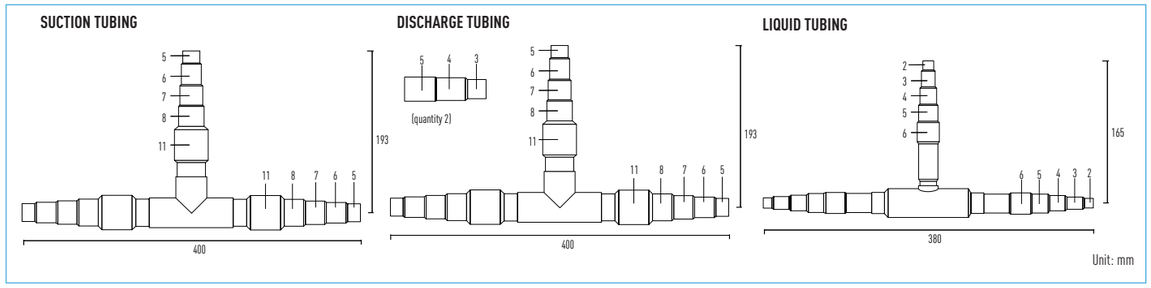

DIAMETERS								
1	6,35 mm	1/4"	6	22,40 mm	7/8"	11	38,10 mm	1"1/2
2	9,52 mm	3/8"	7	25,40 mm	1"	12	41,28 mm	1"5/8
3	12,70 mm	1/2"	8	28,57 mm	1" 1/8	13	44,45 mm	1"3/4
4	15,88 mm	5/8"	9	31,75 mm	1" 1/4	14	50,80 mm	2"
5	19,05 mm	3/4"	10	34,92 mm	1"3/8			

Header pipe set FOR ECOi 2 pipe system ECOi

Header pipe models for 2 pipe systems:
CZ-P4HP4C2BM

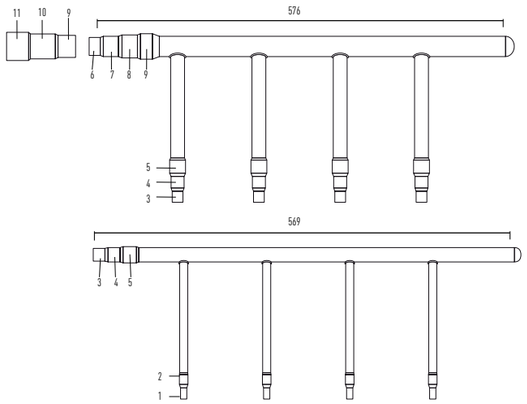

Header pipe set FOR 3 pipe system ECOi

Header pipe model for 3 pipe systems :
CZ-P4HP3C2BM

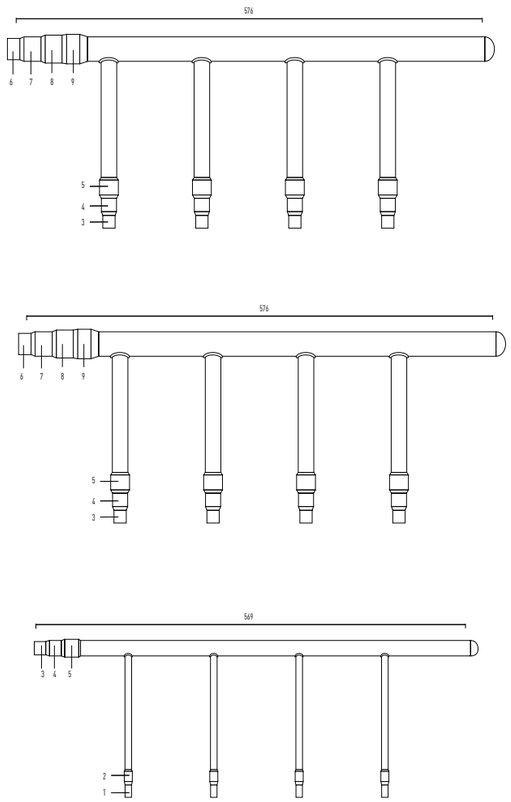

DIAMETERS		
1	6,35 mm	1/4''
2	9,52 mm	3/8''
3	12,70 mm	1/2''
4	15,88 mm	5/8''
5	19,05 mm	3/4''
6	22,40 mm	7/8''
7	25,40 mm	1''
8	28,57 mm	1'' 1/8
9	31,75 mm	1'' 1/4
10	34,92 mm	1''3/8
11	38,10 mm	1''1/2

CONTROL EQUIPMENT EXTERNAL DIMENSIONS

TIMER REMOTE CONTROLLER
(CZ-RTC2)

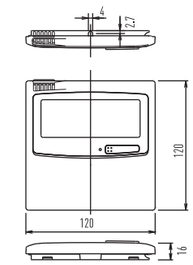

WIRELESS REMOTE CONTROLLER

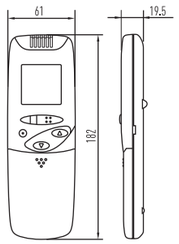

SEPARATE RECEIVER FOR WIRELESS REMOTE CONTROLLER

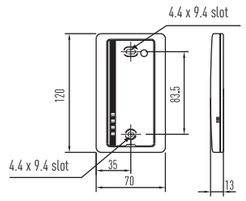

SIMPLIFIED REMOTE CONTROLLER
(CZ-RE2C2)
REMOTE SENSOR
(CZ-CSRC2)

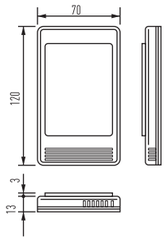

SYSTEM CONTROLLER
(CZ-64ESMC2)

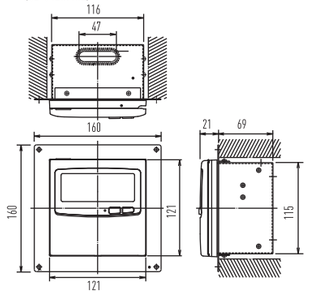

INTELLIGENT CONTROLLER
(CZ-256ESMC2)

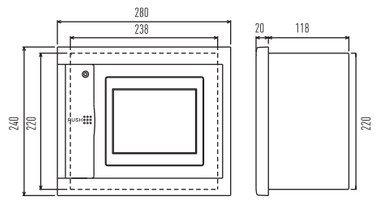

COMMUNICATION ADAPTER
(CZ-CFUNC2)

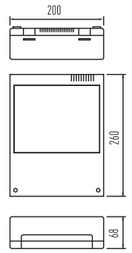

ON/OFF CONTROLLER
(CZ-ANC2)

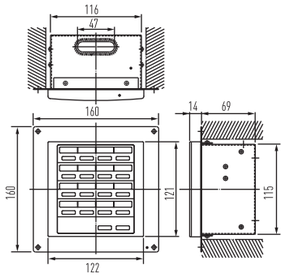

SERI-PARA I/O UNIT FOR EACH INDOOR UNIT
(CZ-CAPBC2)

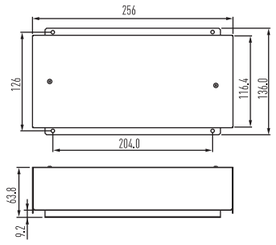

LONWORKS INTERFACE
(CZ-CLNC2)

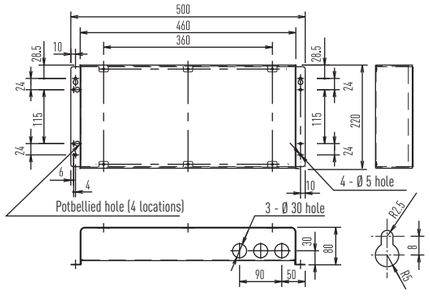

Detail of the potbellied hole

SERI-PARA I /O UNIT FOR OUTDOOR UNIT
(CZ-CAPDC2)

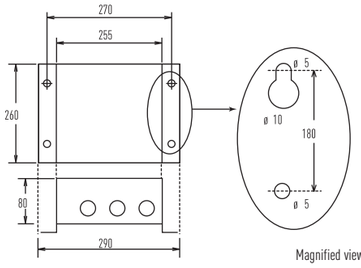

Magnified view

G POWER

		Size (mm)
1	Gas refrigerant pipe (gas tube)	Ø28.58
2	Liquid refrigerant pipe (liquid tube)	Ø15.88
3	Refrigerant balance pipe (balance tube)	Ø9.52
4	Exhaust gas drain hose	Od: length:
5	Electrical power supply port	Ø28
6	Inter-unit cable port	Ø28
7	Inverter cable port	Ø28
8	Inverter cable port	Ø40
9	Fuel gas port	G: r3/4
10	Condensation drain opening	Ø20
11	Rain and condensation outlet	
12	Engine exhaust outlet	
13	Suspension holes 4 - ø20	
14	Anchor holes 4 - ø24	
15	Segmented display	
16	Coolant intake (top)	
17	Vent	
18	Hot water intake	Rp3/4
19	Hot water outlet	Rp3/4

Service Clearances for installation
(Units: mm)

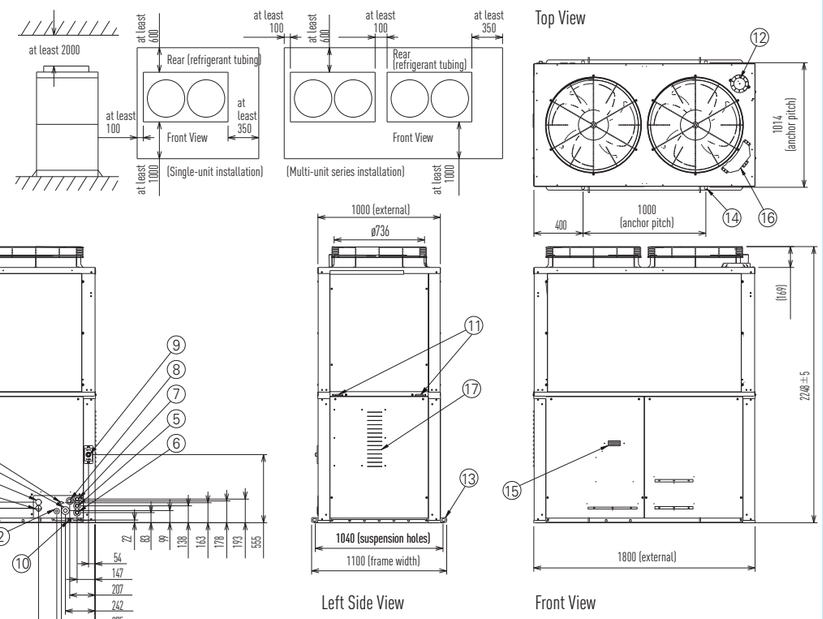

3WAY MULTI

MODEL TYPE		150	190 and 240
1	Suction refrigerant pipe	ø28.58	
2	Discharge refrigerant pipe	ø22.22	ø25.4
3	Liquid refrigerant pipe	ø19.05	
4	Exhaust gas drain hose	OD: ø25 Length: 200	
5	Inter-unit cable port	ø28	
6	Electrical power supply port	ø28	
7	Fuel gas port	G: R3/4	
8	Condensation drain opening	ø20	
9	Rain and condensation outlet		
10	Engine exhaust outlet		
11	Suspension holes	4 - ø20	
12	Anchor holes	4 - ø24	
13	Segmented display		
14	Coolant intake (top)		
15	Vent		

Service Clearances for installation
(Units: mm)

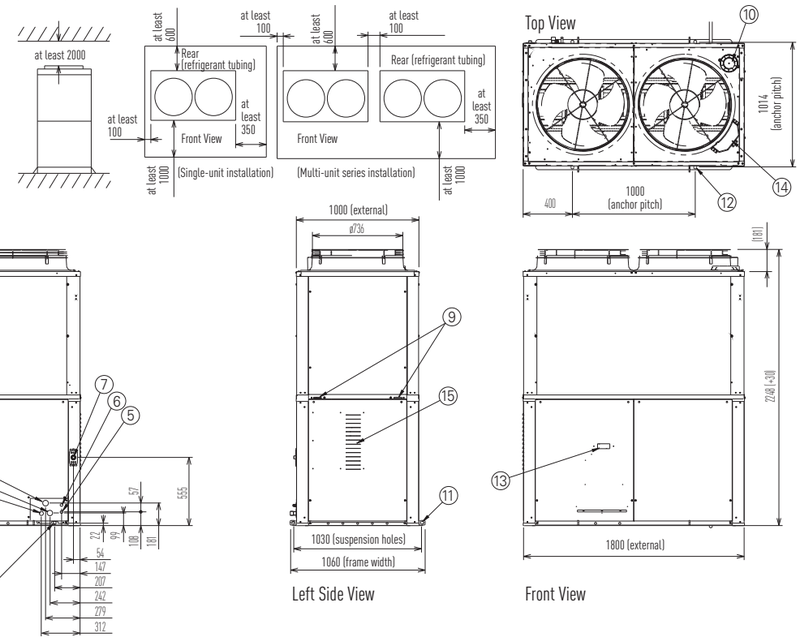

W-MULTI

MODEL TYPE		150	16 / 20 and 25
1	Gas refrigerant pipe (gas tube)	ø28.58	
2	Liquid refrigerant pipe (liquid tube)	ø12.7	ø15.88
3	Refrigerant balance pipe (balance tube)	Ø9.52	
4	Exhaust gas drain hose	Od:ø25 Length: 200	
5	Electrical power supply port	Ø28	
6	Inter-unit cable port	Ø28	
7	Fuel gas port	G: R3/4	
8	Condensation drain opening	Ø20	
9	Rain and condensation outlet		
10	Engine exhaust outlet		
11	Suspension holes	4 - ø20	
12	Anchor holes	4 - ø24	
13	Segmented display		
14	Coolant intake (top)		
15	Vent		
16	Hot water intake	Rp3/4	
17	Hot water outlet	Rp3/4	
18	Cable inlet for intertock and the like	ø28	

Service Clearances for installation
(Units: mm)

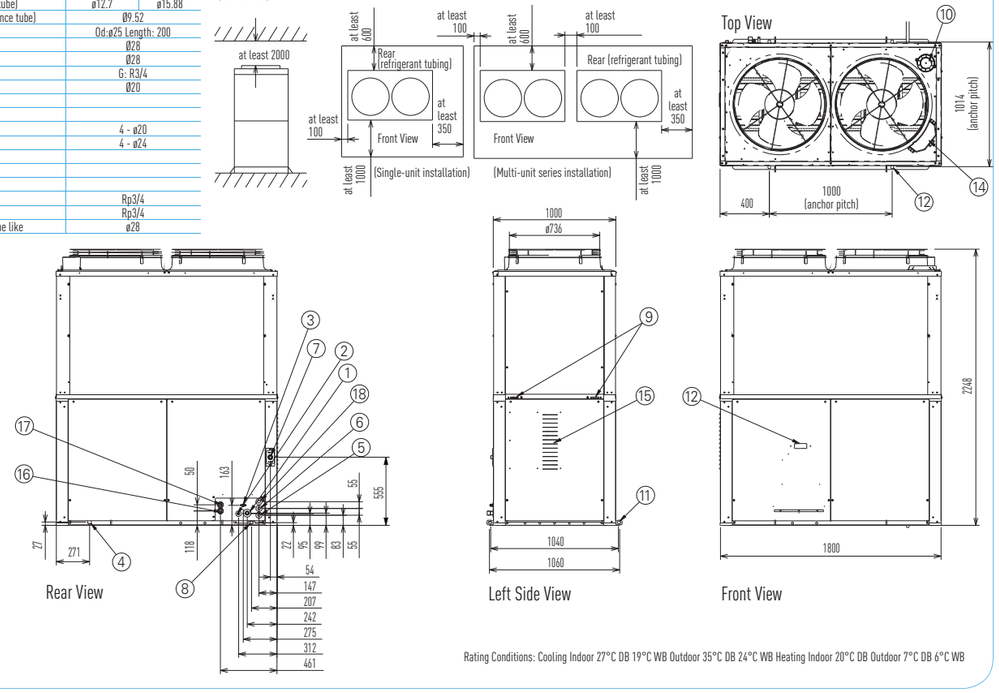

Rating Conditions: Cooling Indoor 27°C DB 19°C WB Outdoor 35°C DB 24°C WB Heating Indoor 20°C DB Outdoor 7°C DB 6°C WB

WATER HEAT EXCHANGER UNIT

(Units: mm)

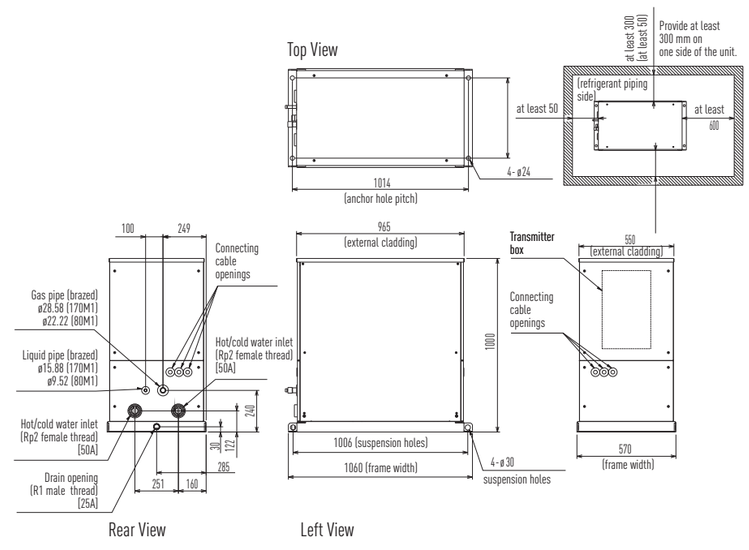

Rating Conditions: Cooling Indoor 27°C DB 19°C WB Outdoor 35°C DB 24°C WB Heating Indoor 20°C DB Outdoor 7°C DB 6°C WB

ECOI INDOOR UNITS DIMENSIONS

U1 TYPE 4-WAY CASSETTE

1 Air intake grill
2 Air outlet
3 Refrigerant piping (liquid pipes)
  Size 22 to 56: Ø6.35 (flared)
  Size 73 to 160: Ø9.52 (flared)
4 Refrigerant piping (gas pipes)
  Size 22 to 56: Ø12.7 (flared)
  Size 73 to 160: Ø15.88 (flared)
5 Drain outlet VP25 (outer Ø32)
6 Power supply entry
7 Discharge duct (Ø150)
8 Suspension bolt hole (4-12 x 37 slot)
9 Outside air inlet duct connection port (Ø100)

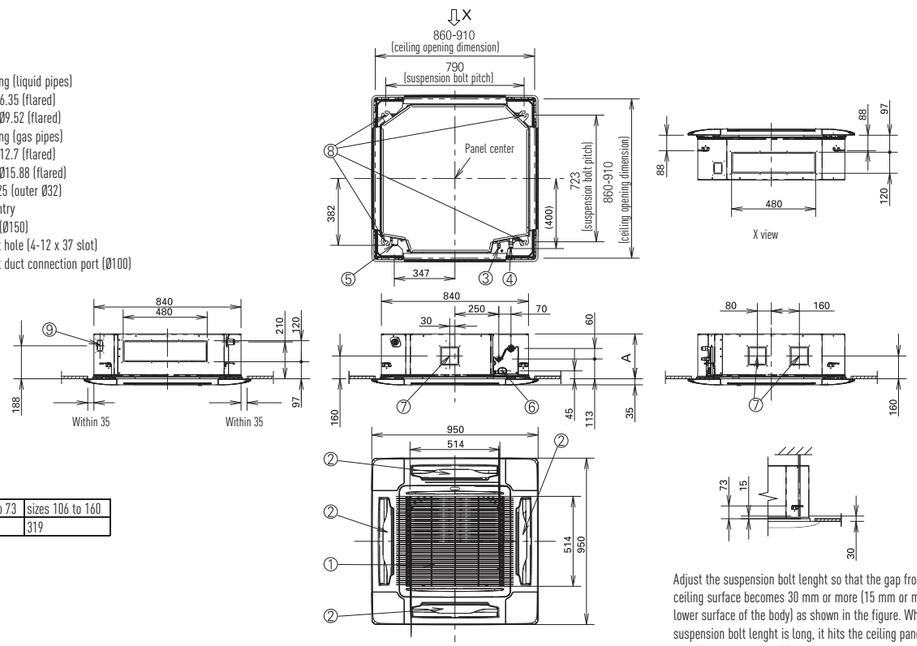

	sizes 22 to 73	sizes 106 to 160
A	256	319

Adjust the suspension bolt lenght so that the gap from the lower ceiling surface becomes 30 mm or more (15 mm or more from the lower surface of the body) as shown in the figure. When the suspension bolt lenght is long, it hits the ceiling panel and installation is not possible.

Dimensions: mm

L1 TYPE 2-WAY CASSETTE

1 Refrigerant liquid line (Ø9.52)
2 Refrigerant gas line (Ø15.88)
3 Drain connection (25 A. O.D. 32 mm)
4 Power supply entry

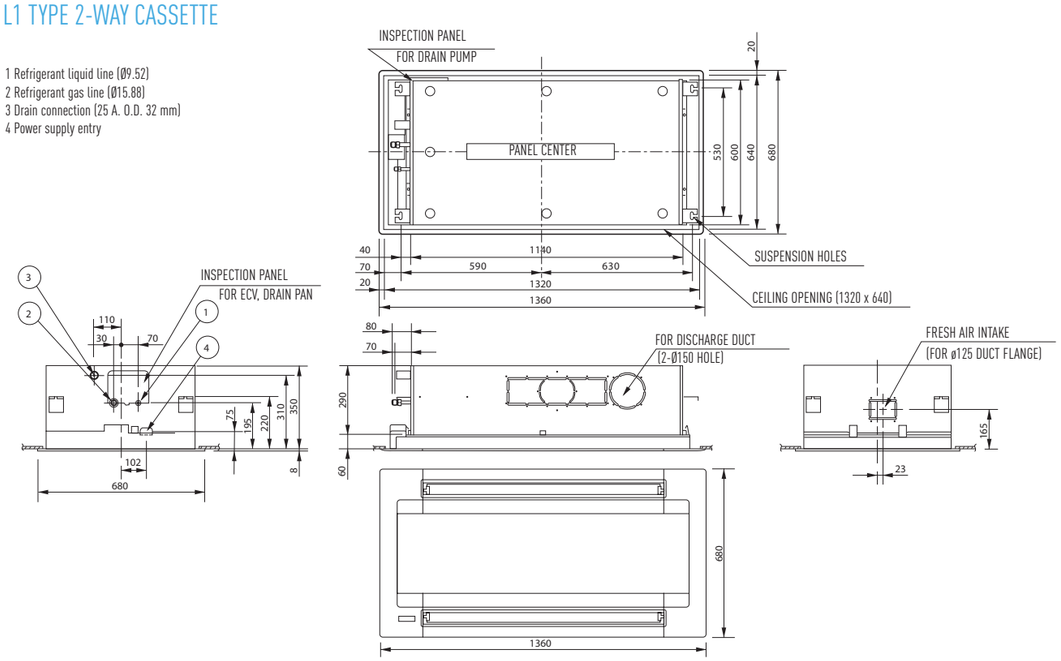

Dimensions: mm

Y1 TYPE 4-WAY CASSETTE 60X60

1 Air intake
2 Discharge outlet
3 Refrigerant piping (liquid pipes)
  Size 22 to 56: Ø6.35 (flared)
4 Refrigerant piping (gas pipes)
  Size 22 to 56: Ø12.7 (flared)
5 Drain tube connection port VP20 (outer Ø26)
6 Power supply port
7 Suspension bolt hole (4-12 x 30 hole)
8 Fresh air intake duct connection port (Ø100)

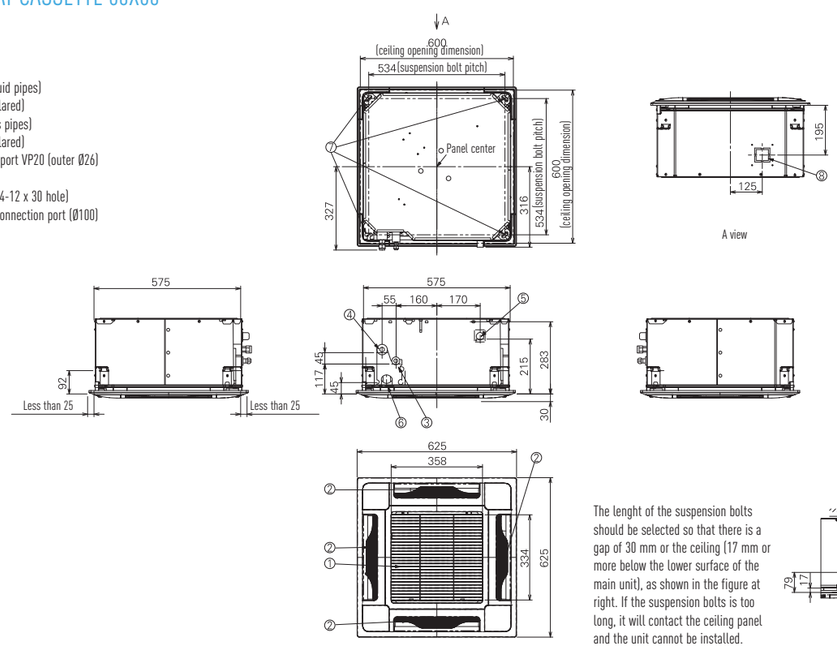

The lenght of the suspension bolts should be selected so that there is a gap of 30 mm or the ceiling (17 mm or more below the lower surface of the main unit), as shown in the figure at right. If the suspension bolts is too long, it will contact the ceiling panel and the unit cannot be installed.

Dimensions: mm

D1 TYPE 1-WAY CASSETTE

1 Air intake grille
2 Air outlet
3 Refrigerant piping (liquid pipes)
  Sizes 28 to 56: Ø6.35 (flared)
  Size 73: Ø9.52 (flared)
4 Refrigerant piping (gas pipes)
  Type 9 to 18: Ø12.7 (flared)
  Type 25: Ø15.88 (flared)
5 Drain connection VP25 (outer Ø32)
6 Power supply entry
7 Discharge duct connetcion port (for descending ceiling)
8 Wireless remote control receiver (option)
9 Suspension mounting (4-12 x 30 slot)
10 Fresh air intake (Ø100)

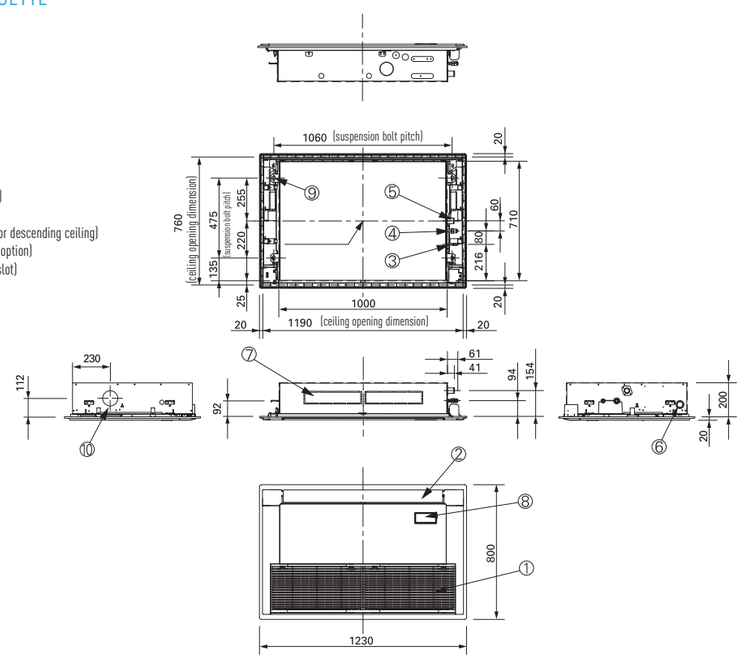

Dimensions: mm

ECOI INDOOR UNITS DIMENSIONS

F1 TYPE LOW SILHOUETTE DUCTED

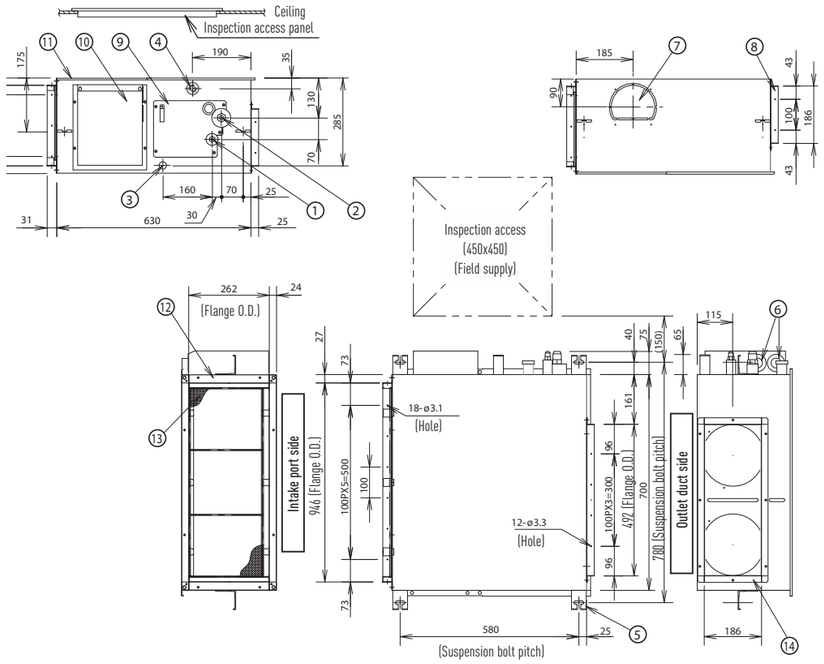

1 Refrigerant piping Ø6,35 Flare (liquid pipes)
2 Refrigerant piping Ø12,7 Flare (gas pipes)
3 Upper drain port VP25 (O.D. 32 mm)
ℓ 200 flexible hose supplied
4 Bottom drain port VP25 (O.D. 32 mm)
5 Suspension lug (4-12 × 37 mm)
6 Power supply outlet (2-Ø30 mm)
7 Fresh air intake port (Ø150 mm)
8 Flange for flexible air outlet duct
9 Tube cover
10 Electrical component box
11Cover plate
12 Flange for air intake duct
13 Filter (608 × 241) × 1
14 Flange for air outlet duct

Dimensions: mm

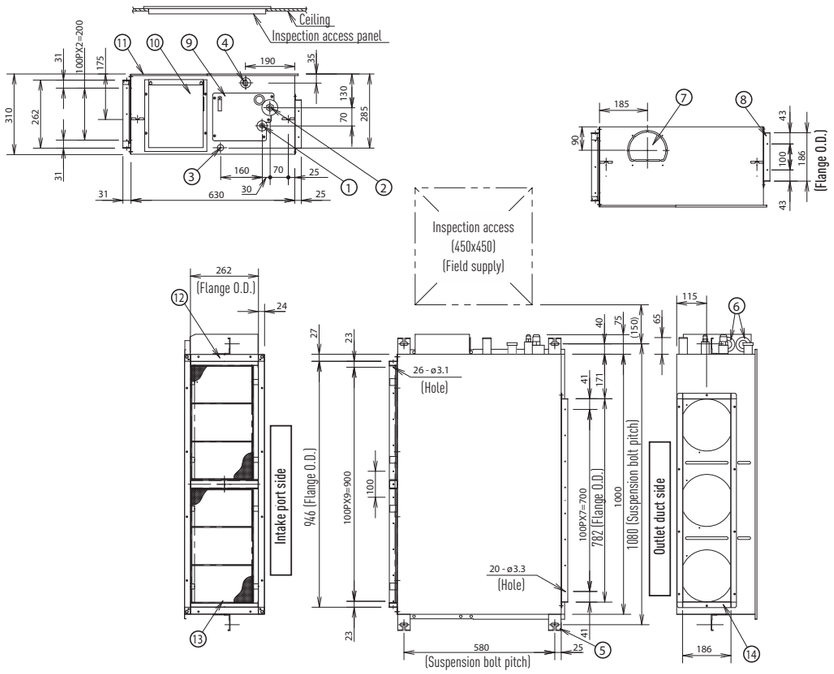

1 Refrigerant tubing joint Ø9.52 Flare (liquid tube)
2 Refrigerant tubing joint Ø15.88 Flare (gas tube)
3 Upper drain port VP25 (O.D. 32 mm) 200 flexible hose supplied
4 Bottom drain port VP25 (O.D. 32 mm)
5 Suspension lug (4 - 12 × 37 mm)
6 Power supply outlet (2 - Ø30 mm)
7 Fresh air intake port (Ø150 mm)
8 Flange for flexible air outlet duct
9 Tube cover
10 Electrical component box
11 Cover plate
12 Flange for air intake duct
13 Filter (437 × 241) × 2
14 Flange for air outlet duct

Dimensions: mm

F1 TYPE LOW SILHOUETTE DUCTED

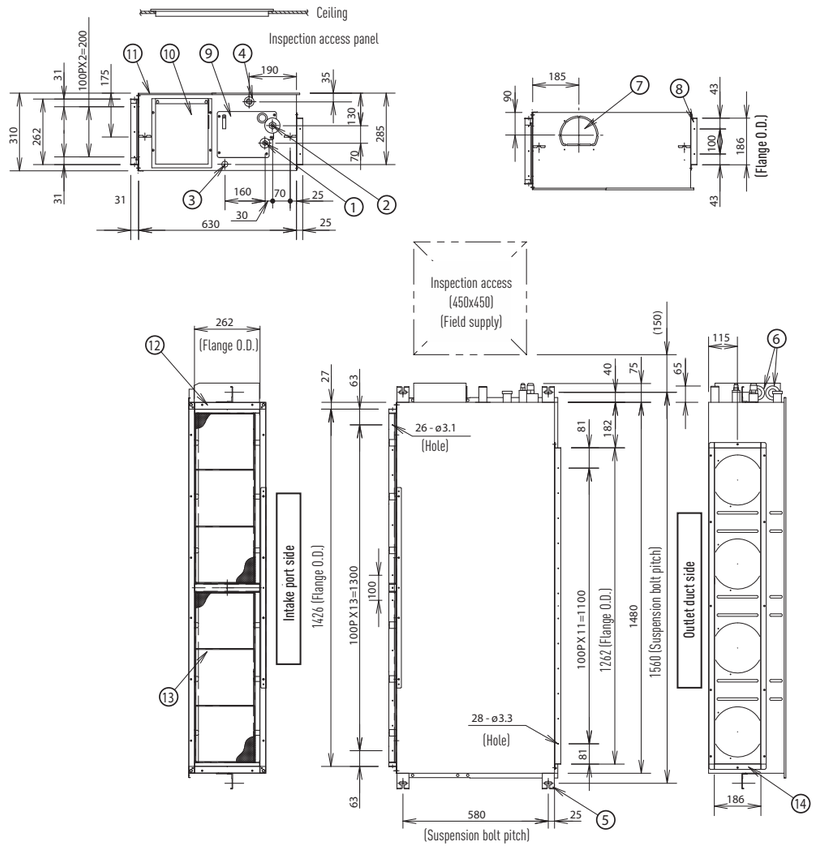

1 Refrigerant tubing joint Ø9,52 Flare (liquid tube)
2 Refrigerant tubing joint Ø15,88 Flare (gas tube)
3 Upper drain port VP25 (O.D. 32 mm)
ℓ 200 flexible hose supplied
4 Bottom drain port VP25 (O.D. 32 mm)
5 Suspension lug (4-12 × 37 mm)
6 Power supply outlet (2-Ø30 mm)
7 Fresh air intake port (Ø150 mm)
8 Flange for flexible air outlet duct
9 Tube cover
10 Electrical component box
11 Cover plate
12 Flange for air intake duct
13 Filter (677 × 241) × 2
14 Flange for air outlet duct

Dimensions: mm

ECOI INDOOR UNITS DIMENSIONS

M1 TYPE SLIM LOW STATIC DUCTED

1 Refrigerant tubing joint (narrow tube)
2 Refrigerant tubing joint (wide tube)
3 Upper and bottom drain port (O.D. 26 mm)
4 Suspension lug
5 Power supply outlet (2- Ø30)
6 Flange for air intake duct
7 Pl cover
8 Electrical component box
9 Frame filter
10 Signal output board (ACC-SG-AGB: optional)

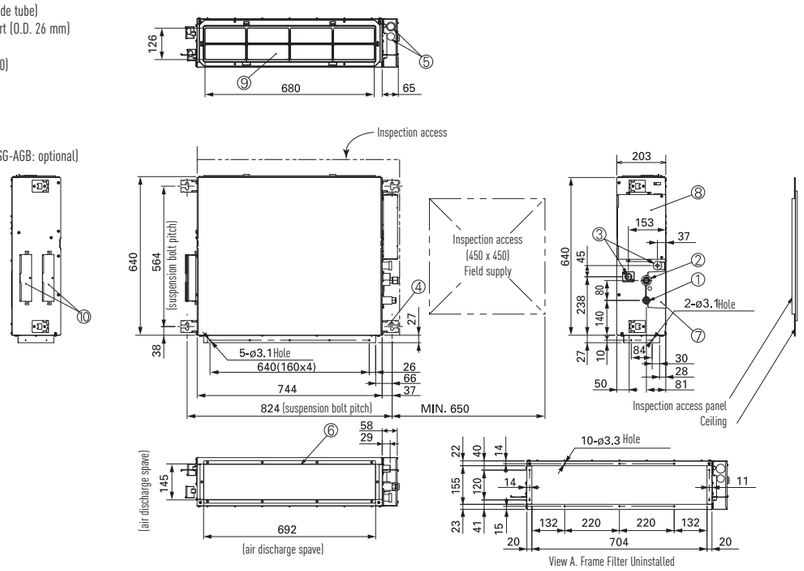

Dimensions: mm

T1 TYPE CEILING

1 Drain port VP20 (inner Ø26, hose accessory)
2 Drain for left piping
3 Upper piping outlet port (knock-out hole)
4 Right piping oulet port (knock-out hole)
5 Drain left piping outlet port (knock-out hole)
6 Power supply entry port (knock-out hole Ø40)
7 Remote controller wiring inlet port
8 Wireless remote control receiver mounting part

	12~18 type	25 type	36~48 type
A (body)	910	1,180	1,595
B (suspension bolt pitch)	855	1,125	1,540

9 Refrigerant gas piping
Type 12 to 18: Ø12.7
Type 25 to 48: Ø15.88
10 Refrigerant liquid piping
Type 12 to 18: Ø6.35
Type 25 to 48: Ø9.52

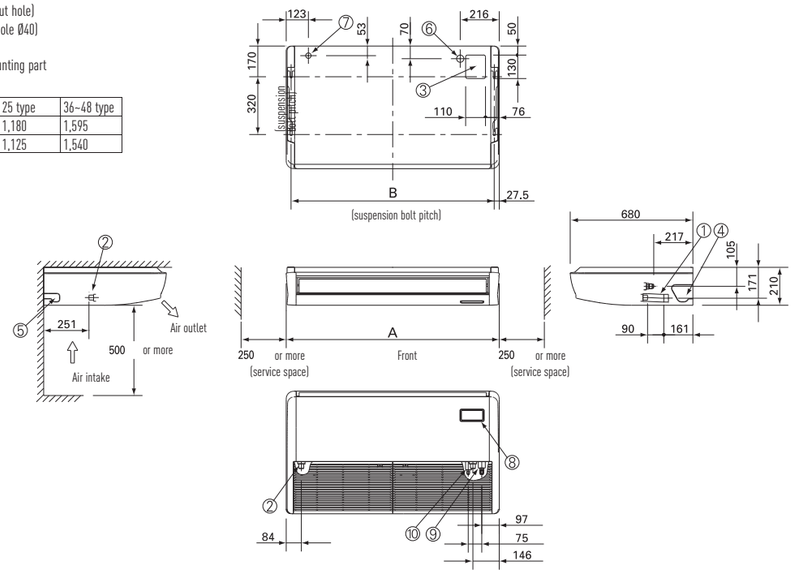

Dimensions: mm

E1 TYPE HIGH STATIC PRESSURE DUCTED

Sizes 73 to 140
1 Refrigerant piping (liquid pipes)
2 Refrigerant piping (gas pipes)
3 Power supply inlet
4 Drain 25 A or VP25
5 Duct connection for suction
6 Duct connection for discharge

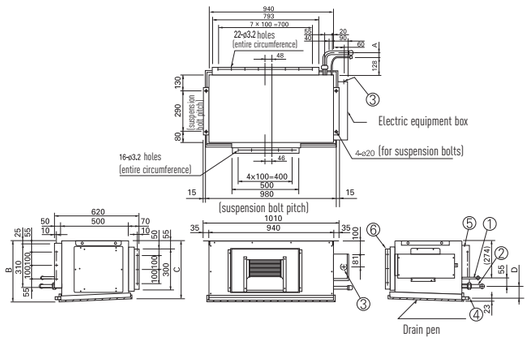

Sizes 224 and 280
1 Refrigerant piping (liquid pipes) Ø9.52
2 Refrigerant piping (gas pipes)
76 type: Ø19.05, 96 type: Ø22.22
3 Power supply outlet (Ø25 grommet, rubber)
4 Power supply outlet (spare) (Ø30 knock-out)
5 Drain port 25 A, male thread
6 Duct connection for suction
7 Duct connection for discharge

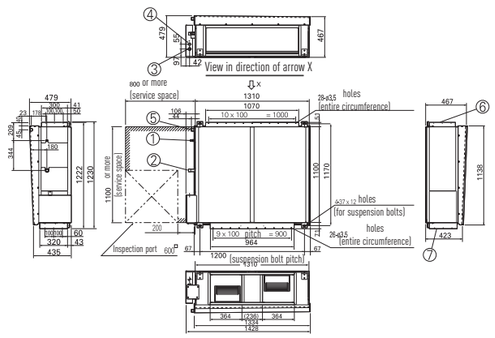

Dimensions: mm

ECOI INDOOR UNITS DIMENSIONS

K1 TYPE WALL MOUNTED

Indoor unit:
S-22MK1E5 / S-28MK1E5 / S-36MK1E5

FILTER SIZE
(316 x 311 x 2) x 2pcs.

1 Refrigerant piping (liquid pipes) Ø6.35 (flared)
2 Refrigerant piping (gas pipes) Ø12.7 (flared)
3 Drain hose VP13 (outer Ø18)
4 Rear panel (PL BLACK)
5 Rear panel fixing holes (Ø5 holes or 5 x 13 oval holes)
6 Piping & coiling holes (Ø65)

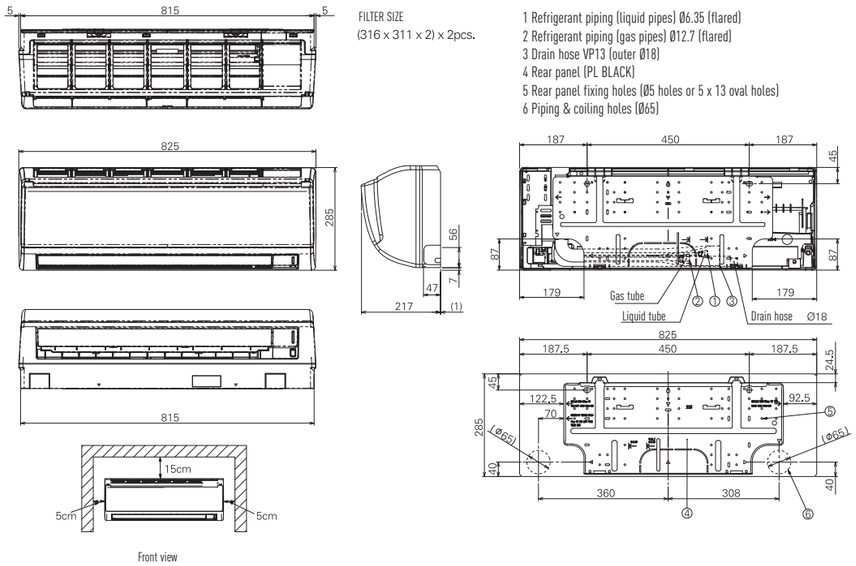

Indoor unit:
S-45MK1E5 / 56MK1E5 / 73MK1E5 / 106MK1E5

1 Refrigerant tubing (liquid tube) 45-56 / 73-106 type Φ6.35 / Φ9.52 (flared)
2 Refrigerant tubing (gas tube) 45-56 / 73-106 type Φ12.7 / Φ15.88 (flared)
3 Drain hose VP13 (outer dia. Φ 18)
4 Rear panel (PL BACK)
5 Tubing and wiring holes (Φ 80)

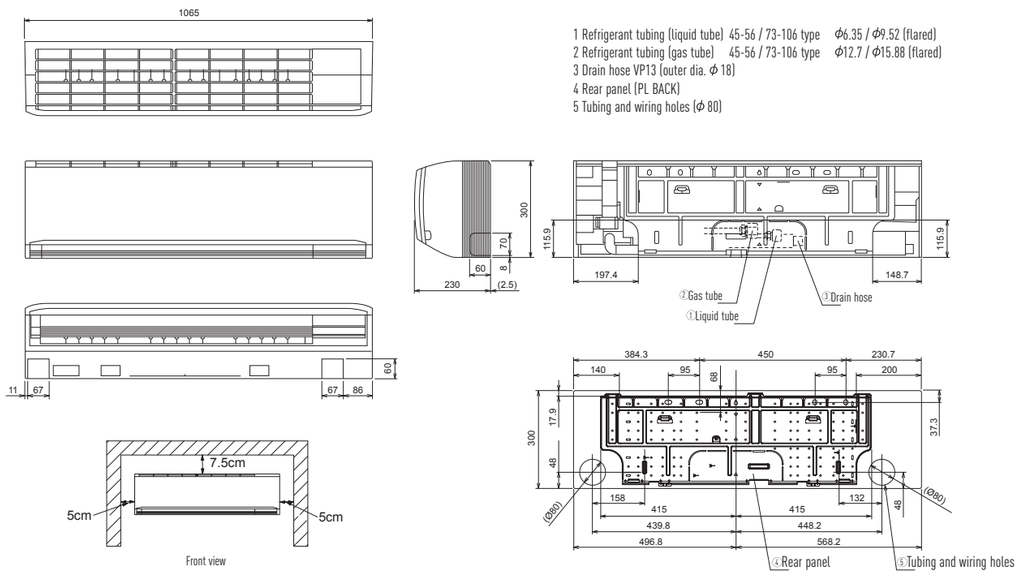

Dimensions: mm

P1 TYPE FLOOR STANDING

1 4 x Ø12 holes (for floor fixing)
2 Power supply outlet
3 Air filter
4 Refrigerant piping (liquid pipes)
5 Refrigerant piping (gas pipes)
6 Level adjustment bolt
7 Drain outlet VP20 (with vinyl hose)
8 Refrigerant piping connection port (bottom or rear)
9 Operation switch mounting part
10 Electric equipment box
11 Accessory copper pipe for gas pipe connection

Indoor unit	A	B	C	Liquid pipes	Gas pipes
22 to 36 type	1,065	665	632	Ø6.35	Ø12.7
45 type	1,380	980	947		
56 type					
71 type				Ø9.52	Ø15.88

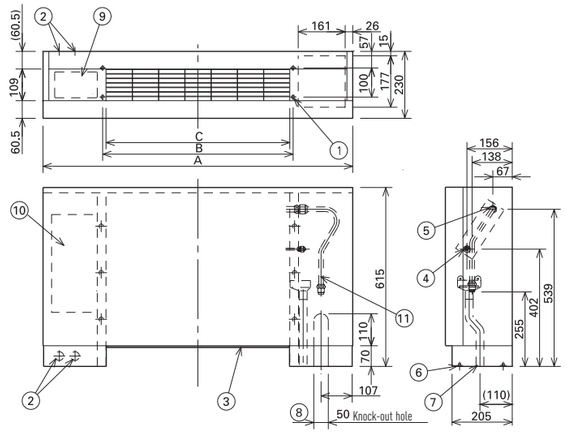

Dimensions: mm

R1 TYPE CONCEALED FLOOR STANDING

1 4 x Ø12 holes (for floor fixing)
2 Electric equipment box
3 Power supply outlet
4 Air filter
5 Discharge duct connection flange
6 Refrigerant connection outlet (liquid pipes)
7 Refrigerant connection outlet (gas pipes)
8 Drain filter
9 Drain pan
10 Level adjustment bolt
11 Drain outlet VP20 (with vinyl hose)

Indoor unit	A	B	C	D	E	F	Liquid pipes	Gas pipes
22 to 36 type	904	692	672	665	500	86	Ø6.35	Ø12.7
45 type	1,219	1,007	1,002	980	900	51		
56 type								
71 type							Ø9.52	Ø15.88

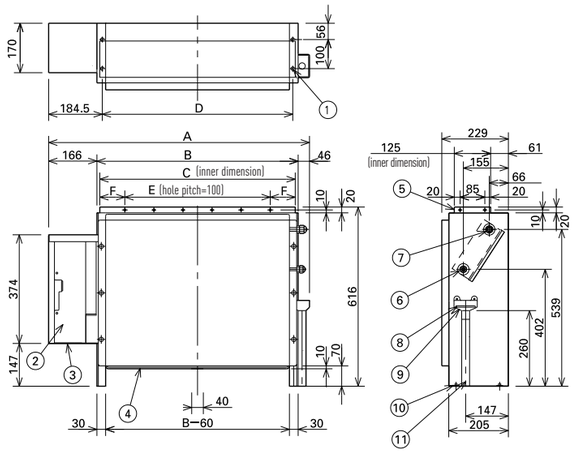

Dimensions: mm

PANASONIC'S ENERGY RECOVERY VENTILATOR UNIT OFFERS MAXIMUM COMFORT AND GREATER ENERGY SAVINGS

Energy recovery ventilators offer ventilation which increases comfort and saves energy. They efficiently recover the heat lost in ventilation during the heat recovery process.

20% energy saving
Energy consumption is dramatically reduced by using a counter-flow heat-exchange element. Air conditioning load is reduced by approximately 20%, resulting in significant energy savings.

Lightweight structure
The lightweight structure makes installation easier.

Quiet operation
Low noise operation results in noticeably quieter units. All models with capacities below 500 m³/h run at noise levels below 32 dB (High setting) and even our largest 1,000 m³/h-capacity model runs at only 37.5 dB (High setting).

Long heat-exchange element service life

CHANGES IN AIRFLOW RESISTANCE BASED ON NUMBER OF YEARS IN SERVICE

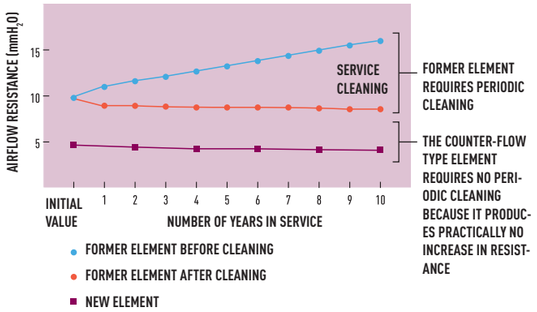

The heat exchanger is made up of a membrane manufactured from a special material covered in resin for optimal heat transmission. The nylon/polyester fibre filter offers high dust retention capacity. We have also redesigned the air ducts to obtain a long-lasting heat exchange system which does not need periodic cleaning.

Heat exchanger characteristics

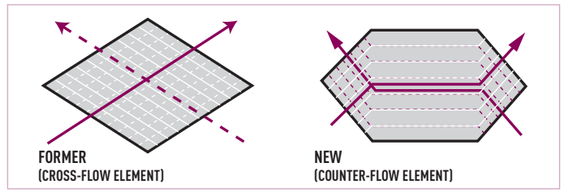

With the cross-flow element, air moves in a straight line across the element. With the counter-flow element, air flows through the element for a longer time (longer distance), so the heat-exchange effect remains unchanged even if the element is made thinner.

Characteristics common to all models
- Counter-flow heat exchange element used for reduced noise and slimmer, more compact body shape.
- All maintenance can be performed through a single inspection hole.
- Straight air supply / exhaust system used for easier installation.
- Each unit can be mounted in reverse position.
- Equipped with an Extra-High setting.
- Can incorporate a medium performance filter (optional, installed on site).

Slim shape and easier installation
Counter-flow heat exchange element used for reduced noise and slimmer, more compact body shape.

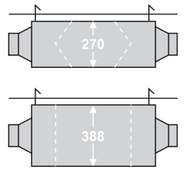

MODEL NO. FY-250ZDY2
FY-350ZDY2
FY-500ZDY2

MODEL NO. FY-800ZDY2
FY-01KZDY2A
FY-01KZDY2B

REVERSE-MOUNTABLE UNIT

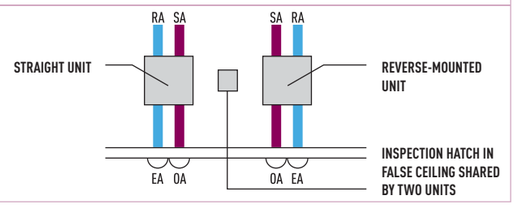

TECHNICAL ZOOM

- HIGH ENERGY SAVING, UP TO 20%
- COUNTER CROSS FLOW TECHNOLOGY FOR BETTER EFFICIENCY
- LONG LIFE ELEMENT CORE
- EASY INSTALLATION AND 20% LESS THICKNESS
- EASY CONNECTION TO AIR CONDITIONING UNITS
- SUPER QUIET UNITS

ENERGY RECOVERY VENTILATION SYSTEM

Recovers up to 77% of the heat in the outgoing air, for an ecological and energy saving building

RATED FLOW RATE			250 M³/H	350 M³/H	500 M³/H	800 M³/H	1000 M³/H
MODELS			FY-250ZDY2	FY-350ZDY2	FY-500ZDY2	FY-800ZDY2	FY-01KZDY2A
Power Source		V A.C	220 - 240	220 - 240	220 - 240	220 - 240	220 - 240
Frequency		Hz	50	50	50	50	50
HEAT EXCHANGE VENTILATION							
Input	Extra High	W	104 - 119	137 - 154	188 - 214	316 - 347	399 - 445
	High	W	99 - 114	124 - 137	169 - 188	309 - 329	360 - 399
	Low	W	79 - 90	117 - 128	151 - 166	302 - 327	332 - 367
Current	Extra High	A	0.48 - 0.50	0.63 - 0.65	0.86 - 0.90	1.51 - 1.54	1.97 - 2.04
	High	A	0.46 - 0.48	0.59 - 0.60	0.79 - 0.81	1.48 - 1.50	1.85 - 1.93
	Low	A	0.37 - 0.39	0.56 - 0.57	0.72 - 0.73	1.44 - 1.46	1.68 - 1.76
Air Volume	Extra High / High / Low	m³/h	250 / 250 / 170	350 / 350 / 280	500 / 500 / 370	800 / 800 / 650	1000 / 1000 / 810
Air Volume	Extra High / High / Low	ft³/min	148 / 148 / 100	207 / 207 / 165	295 / 295 / 218	472 / 472 / 384	590 / 590 / 478
External Static Pressure	Extra High / High / Low	Pa	90 / 80 / 37	95 / 65 / 42	105 / 70 / 38	140 / 110 / 70	90 / 55 / 35
Temperature Exchange Efficiency	Extra High / High / Low	%	75 / 75 / 77	75 / 75 / 77	75 / 75 / 77	75 / 75 / 76	75 / 75 / 76
Enthalpy Exchange Efficiency	Extra High / High / Low	Cooling %	63 / 63 / 66	66 / 66 / 69	62 / 62 / 67	65 / 65 / 68	65 / 65 / 68
	Extra High / High / Low	Heating %	70 / 70 / 73	69 / 69 / 71	67 / 67 / 71	71 / 71 / 74	71 / 71 / 73
NORMAL VENTILATION							
Input	Extra High	W	103 - 119	133 - 151	184 - 210	309 - 337	392 - 438
	High	W	98 - 114	119 - 132	161 - 182	300 - 325	358 - 392
	Low	W	79 - 90	113 - 125	145 - 164	297 - 316	329 - 362
Current	Extra High	A	0.47 - 0.50	0.61 - 0.63	0.84 - 0.88	1.47 - 1.50	1.95 - 2.03
	High	A	0.46 - 0.48	0.57 - 0.60	0.76 - 0.77	1.45 - 1.48	1.84 - 1.92
	Low	A	0.37 - 0.39	0.54 - 0.56	0.71 - 0.73	1.41 - 1.43	1.67 - 1.74
Air Volume	Extra High / High / Low	m³/h	250 / 250 / 170	350 / 350 / 280	500 / 500 / 370	800 / 800 / 650	1000 / 1000 / 810
External Static Pressure	Extra High / High / Low	Pa	90 / 80 / 37	95 / 65 / 42	105 / 70 / 38	140 / 110 / 70	90 / 55 / 35
Noise	Extra High	dB	27 - 28	31 - 32	34 - 35	38.5 - 39.5	38 - 39
	High	dB	26.5 - 27.5	30 - 31	32 - 33	37 - 38	36.5 - 37.5
	Low	dB	21.5 - 22.5	26 - 27	26.5 - 27.5	33.35	31.5 - 33.5
Product Weight		Kg	29	37	43	71	83

- This noise of the product is the value which was measured at the acoustic room. Actually, in the established condition, that undergo influence by the echoing of the room and so that become bigger than the display numerical value.
- The input, the current and the exchange efficiency are values at the time of the mentioned air volume.
- The noise level shall be measured 1.5m below the centre of the unit.
- The temperature exchange efficiency averages that of when cooling and when heating.

TYPICAL SYSTEM LINKED TO A CASSETTE TYPE AIR CONDITIONER

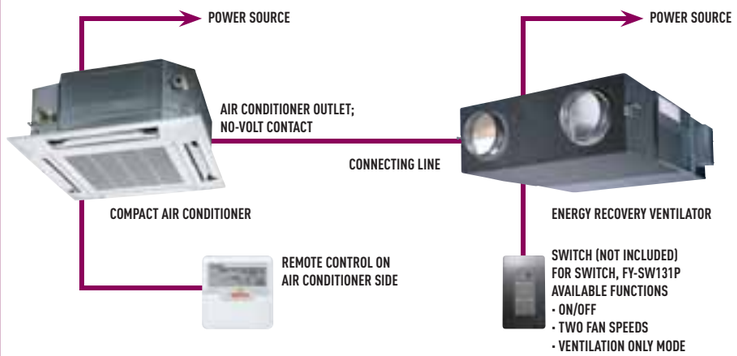

USE CONDITIONS

OUTDOOR AIR CONDITIONS
TEMPERATURE RANGE: -10 ºC – 40 ºC
RELATIVE HUMIDITY: 85% OR LESS

INDOOR AIR CONDITIONS
TEMPERATURE RANGE: -10 ºC – 40 ºC
RELATIVE HUMIDITY: 85% OR LESS

REQUIREMENTS FOR INSTALLATION
USE IS TO BE AVOIDED IN REFRIGERATED CHAMBERS OR OTHER PLACES WHERE THE TEMPERATURE MAY UNDERGO SIGNIFICANT FLUCTUATIONS, EVEN WHEN THE TEMPERATURE RANGE IS ACCEPTABLE.

FY-10ESPNAH // FY-10ELPNAH

HEALTHY AIR
- The filter guarantees healthier air

ENERGY EFFICIENCY AND ECOLOGY
- Up to 20% energy saving in the installation
- Recovers up to 77% of the heat in the outgoing air

COMFORT
- Quiet units (21,5 dB for the FY-250ZDY2)
- Cleaning reduced due to the revolutionary structure of the exchanger (recommended every 6 months)
- Ideal for indoor spaces without windows

EASY INSTALLATION AND MAINTENANCE
- Five models for easier selection
- Reduced system height (270 mm and 388 mm)
- Side opening for cleaning (inspection of filter, motor and other parts)
- Installation can be reversed to share an inspection opening between 2 machines
- Easy connection to the air conditioning unit (without additional elements)
- Installation in false ceilings
- Units operate at 220 - 240V
- High static pressure for easier installation

INDOOR UNIT DIMENSIONS

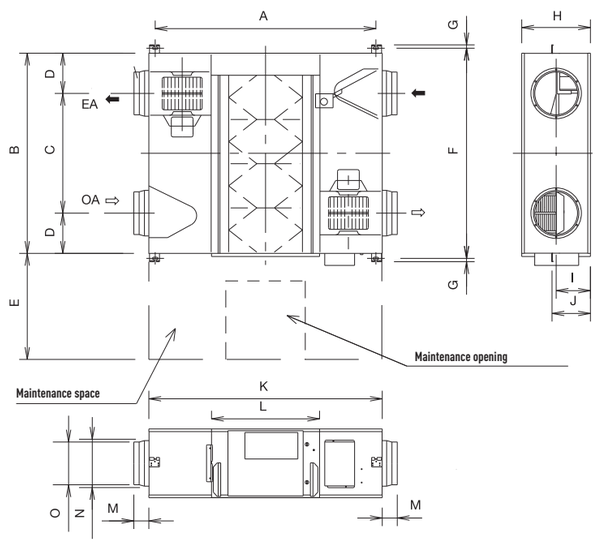

	FY-250ZDY2	FY-350ZDY2	FY-500ZDY2	FY-800ZDY2	FY-01KZDY2A
A	810	810	890	1,250	1,250
B	599	804	904	884	1,134
C	315	480	500	428	678
D	142	162	202	228	228
E	600	600	600	600	600
F	655	860	960	940	1,190
G	19	19	19	19	19
H	270	270	270	288	388
I	135	145	145	194	194
J	159	159	159	218	218
K	882	882	962	1,322	1,322
L	414	414	414	612	612
M	95	95	107	85	85
N	219	219	246	258	258
O	144	144	194	242	242

TECHNICAL ZOOM

- 2 SIZES : 900MM AND 1200MM
- POWERFUL AIR FLOW (10 M/S)
- VERY LOW NOISE, ONLY 42DB

AIR CURTAIN

2 sizes for 900mm and 1200mm air curtains. Ideal for separating areas and energy saving.

			FY-10ESPNAH	FY-10ELPNAH
Width			900	1.200
Watts	Hi	W	71,5	96
	Lo	W	61,5	74
Current	Hi	A	0,40	0,54
	Lo	A	0,29	0,35
Air speed	Hi	m/s	13,0	13,1
	Lo	m/s	11,1	11,0
Air volume	Hi	m^3/h	750	1.000
	Lo	m^3/h	630	830
Noise lever	Hi	dB(A)	46	46
	Lo	dB(A)	42	41
Weight		Kg	11	14

FY-10ESPNAH // FY-10ELPNAH

COMFORT
- Easy redirection of airflow by means of the manual deflector

EASE OF USE
- Speed selector (high and low) on the unit itself

EASY INSTALLATION AND MAINTENANCE
- Simple installation
- Its compact dimensions improve installation and positioning in any space

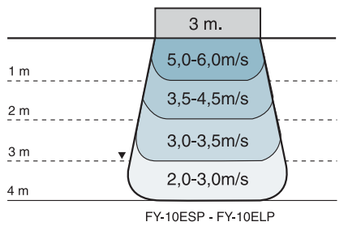

▼ Effectiveness of air

INDOOR UNIT DIMENSIONS FY-10ESPNAH

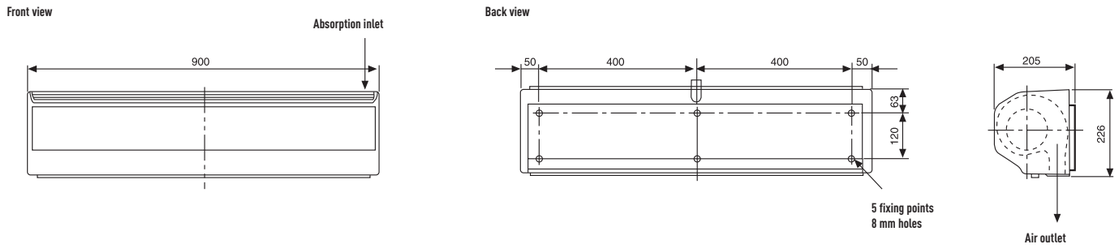

INDOOR UNIT DIMENSIONS FY-10ELPNAH

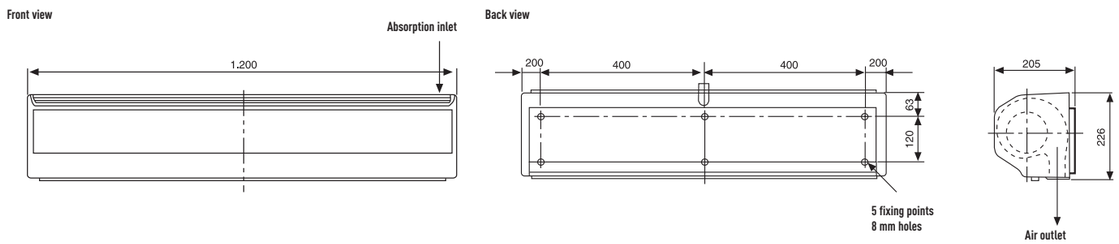

Panasonic

www.panasonic.eu

heatingandcoolingsystems

Due to the ongoing innovation of our products, the specifications of this catalogue are valid barring typographic errors, and may be subject to minor modifications by the manufacturer without prior warning in order to improve the product. The total or partial reproduction of this catalogue is prohibited without the express authorisation of Panasonic UK Ltd.

www.eggassociats.net

Panasonic®

To find out how Panasonic cares for you, log on to: www.panasonic.eu

Contact Details:
E-mail: paul.taylor@eu.panasonic.com
Telephone: 01344 853182
www.panasonic.co.uk/aircon

Address: Panasonic Air Conditioning
Panasonic House
Willoughby Road
Bracknell
Berkshire
RG12 8FP